F	04.12.2025.	L. Božičević	D. Burčul	G. Kolić	Après ERU / After FAT	BPE
E	21.07.2025.	T. Trogrlić	D. Burčul	G. Kolić	Pour fabrication / For manufacturing	BPE
D	03.06.2025.	T. Trogrlić	D. Burčul	G. Kolić	Arrêt d'urgence mise à jour / Emergency matrix update	PRE
C	14.04.2025.	L. Božičević	D. Burčul	G. Kolić	Mise à jour générale / General update	PRE
B	07.03.2025.	L. Božičević	D. Burčul	G. Kolić	Mise à jour générale / General update	PRE
A	10.02.2025.	L. Božičević	D. Burčul	G. Kolić	Etablissement du plan / First issue	PRE
Rév. Rev.	**Date** Date	**Etabli** Prepared	**Vérifié** Checked	**Approuvé** Approved	**Modifications** Modifications	**Statut** Status

Maîtrise d'ouvrage
Project Owner

ALBIOMA
NOTRE NATURE EST PLEINE D'ÉNERGIE

ALBIOMA BOIS ROUGE

2, Chemin Bois Rouge
97440 Saint-Andre
LA REUNION - FRANCE

Maîtrise d'œuvre
Engineering & Project Management

sepoc
Groupe MERLIN

31, rue Ferrandière
69002 Lyon
Tél : 04-72-32-57-00
Fax : 04-72-32-57-29

Maîtrise d'ouvrage délégué
Project Owner Delegate

ALBIOMA
NOTRE NATURE EST PLEINE D'ÉNERGIE

Tour OPUS 12 - LA DÉFENSE 9
77, Esplanade du Général de Gaulle
92914 LA DEFENSE CEDEX - FRANCE
Téléphone : +33(0)1.47.76.67.00

Réf. MOE : -

UNITE DE VALORISATION CRS ABR
ABR RDF POWER PLANT

+4LKD001AR
BOILER/LOW VOLTAGE CABINET BOILER (NORMAL)
Schéma électrique

-

Fournisseur / Supplier

ANDRITZ

ANDRITZ TEP d.o.o.

Ulica 108. brigade ZNG, 84
35000 Slavonski Brod, Croatia

Réf. F/S : IF21273

Sous-traitant / Sub-Supplier

SINTAKSA
A Voith Company

Ulica Domovinskog rata 104C, 21 000 Split,
Tuškanova 37, 10000 Zagreb
T: +385 1 2310 273
info@sintaksa.hr
www.sintaksa.hr

Réf. ST/SS : xxxxxxxxxx

Projet / Project	Tranche / unit	Emetteur / Issuer	Numéro / Number	Révision / Revision
BRC	4	ATEP0	1874	G

Approbation de la dernière révision :
Approval of the latest revision :

Format	Echelle / Scale	Folio
A3	1/XX	1/561

This document is ALBIOMA property. It cannot be used, reproduced, transmitted and/or disclosed without prior written authorisation

SINTAKSA
A Voith Company

Ulica Domovinskog rata 104C,
21 000 Split, Hrvatska / Croatia
OIB: 32357958120
T: +385 1 2310 273
www.sintaksa.hr

SCHÉMA DE CÂBLAGE ÉLECTRIQUE

Projet / tâche:

RDF Albioma Les Bois Rouge
Reunion - France

Cadre:

BOILER/LOW VOLTAGE
CABINET BOILER (NORMAL)
1
+4LKD001AR

Client / acheteur:

ANDRITZ TEP d.o.o.
Ulica 108. brigade ZNG 84, 35000
Slavonski Brod, Croatia

Code du document:

BRC-4-ATEP0-1874-G

Date:
17.03.2026.

Table of contents

Page number	Page description	Remarks of creator	Date	Checked by	Revision
1	COVER PAGE		7/6/2026		G
2	TITLE PAGE		5/24/2026		G
3	TABLE OF CONTENTS		2026/07/07		G
4	TABLE OF CONTENTS		2026/07/07		
21	WIRING PRINCIPLE		5/24/2026		G
22	DESIGNATION CODES		5/24/2026		G
31	400VAC INCOMING SUPPLY		6/23/2026		G
32	400VAC INCOMING SUPPLY		6/6/2026		G
33	400VAC INCOMING SUPPLY		6/6/2026		G
34	230VAC DISTRIBUTION		6/29/2026		G
35	230VAC DISTRIBUTION		6/29/2026		G
36	48VAC DISTRIBUTION		6/25/2026		G
37	48VAC DISTRIBUTION		6/25/2026		G
38	230VAC DISTRIBUTION		7/7/2026		G
39	230VAC DISTRIBUTION		6/6/2026		G
40	230VAC DISTRIBUTION		5/24/2026		G
41	48VAC DISTRIBUTION 1		6/6/2026		G
42	48VAC DISTRIBUTION 2		6/6/2026		G
51	SIGNALIZATION		6/6/2026		G
55	SPARE		6/26/2026		G
401	SUMMARIZED PARTS LIST		7/7/2026		
402	SUMMARIZED PARTS LIST		7/7/2026		
501	CABLE DIAGRAM		7/7/2026		
601	Terminal diagram =4LKD001AR+4LKD001AR-X 038 08		7/7/2026		
602	Terminal diagram =4LKD001AR+4LKD001AR-X 111 04		6/18/2026		
603	Terminal diagram =4LKD001AR+4LKD001AR-X 112 04		6/18/2026		
604	Terminal diagram =4LKD001AR+4LKD001AR-X 117 04		6/18/2026		
605	Terminal diagram =4LKD001AR+4LKD001AR-XA 034 03		7/7/2026		
606	Terminal diagram =4LKD001AR+4LKD001AR-XA 035 03		7/7/2026		
607	Terminal diagram =4LKD001AR+4LKD001AR-XA 038 05		7/7/2026		
608	Terminal diagram =4LKD001AR+4LKD001AR-XB 036 03		7/7/2026		
609	Terminal diagram =4LKD001AR+4LKD001AR-XB 037 03		7/7/2026		
610	Terminal diagram =4LKD001AR+4LKD001AR-XB 041 05		7/7/2026		

Table of contents

Page number	Page description	Remarks of creator	Date	Checked by	Revision
611	Terminal diagram =4LKD001AR+4LKD001AR-XB 042 05		7/7/2026		
612	Terminal diagram =4LKD001AR+4LKD001AR-XS 051 03		7/7/2026		
613	Terminal diagram =4LKD001AR+4LKD001AR-XS 055 03		7/7/2026		
614	Terminal diagram =4LKD001AR+4LKD001AR-XS 055 03		7/7/2026		

WIRE COLOR		
VOLTAGE	DESIGNATION	COLOR
400VAC	PHASE 1	BLACK - BLACK SLEEVE
400VAC	PHASE 2	BLACK - BROWN SLEEVE
400VAC	PHASE 3	BLACK - RED SLEEVE
	GROUND	GREEN & YELLOW
230VAC	PHASE	BROWN / BLACK
230VAC	NEUTRAL	BLUE / LIGHT BLUE
48VAC	PHASE 1	WHITE
48VAC	PHASE 2	GREY
24VDC	+24V PLC	RED
24VDC	-24V PLC	BLUE
EXTERNE	VOLTAGE > 48 VAC	ORANGE
ANALOG SIGNALS	ALL CONDUCTORS	VIOLET

INTERNAL CABINET WIRING	
CURRENT	SECTION
< 10A	1 mm²
10A	1.5 mm²
16-20A	2.5 mm²
25A	4 mm²
32A	6 mm²
40-50A	10 mm²
63A	16 mm²
80-100A	25 mm²
125A	35 mm²
160A	50 mm²
WIRE TYPE : HO7VK	

POWER	SECTION MIN : 2,5 mm²
INTERNAL WIRING MARK	WIRE/LINE OF CELL" e.g.: WIRE 3/LINE 4 → 3.4
CABLE MARKING	SEE CABLE BOOK
WIRE MARKING	MARKING BY SES V 37

TERMINAL TYPE	SECTION
PUSH-IN CONNECTION TERMINALS	≤ 6mm²
SCREW CONNECTION TERMINALS	> 6mm²

GROUNDING TYPE	IT
NETWORK VOLTAGE	400/230VCA, 48VCA
SHORT CIRCUIT CURRENT	IK3MAX: 26 kA

DEVICE TAG

DESIGNATION	DEVICE TYPE	ACCORDING TO
-BA	MEASUREMENT MODULE (VOLTAGE)	NF EN 81346-2
-BC	MEASUREMENT MODULE (CURRENT)	NF EN 81346-2
-BE	MODULE FOR INSULATION AND FAULT LOCATION	NF EN 81346-2
-BE	FAULT-LOCATING MODULE	NF EN 81346-2
-DS	DISTRIBUTION BLOCK	NF EN 81346-2
-EP	HEATER	NF EN 81346-2
-FA	SURGE PROTECTOR	NF EN 81346-2
-FU	FUSE-DISCONNECTOR	TYPICAL
-CQ	VENTILATOR	NF EN 81346-2
-HL	SIGNAL LAMP	TYPICAL
-IG	SWITCH DISCONNECTOR	TYPICAL
-K	RELAY	TYPICAL
-KF	PLC	NF EN 81346-2
-KM	CONTACTOR	TYPICAL
-P	MULTIMETER	NF EN 81346-2
-P	THERMOSTAT, HYGROSTAT	NF EN 81346-2
-PF	LAMP	NF EN 81346-2
-PG	AMMETER	NF EN 81346-2
-Q	CIRCUIT BREAKER, MCB, MPCB	TYPICAL
-QA	SOFT STARTER	NF EN 81346-2
-QB	CIRCUIT BREAKER, MCCB, ACB	TYPICAL
-R	DIODE MODULES	NF EN 81346-2
-RF	FILTER	NF EN 81346-2
-RP	SAFETY RELAY	NF EN 81346-2
-S	SELECTOR SWITCHES, PUSH-BUTTON, DOOR SWITCH	TYPICAL
-TA	VARIABLE FREQUENCY DRIVE	NF EN 81346-2
-TB	INVERTER, RECTIFIER	NF EN 81346-2
-TC	CURRENT TRANSFORMER	TYPICAL
-TCU	CURRENT TRANSFORMER PHASE L1	TYPICAL
-TCV	CURRENT TRANSFORMER PHASE L2	TYPICAL
-TCW	CURRENT TRANSFORMER PHASE L3	TYPICAL
-U	SWITCH	NF EN 81346-2
-X	TERMINAL BLOCK	TYPICAL
-XS	SOCKET	NF EN 81346-2

CABLE DESIGNATION

DESIGNATION	LIAISON TYPE
-A	HV POWER SUPPLY
-B	LV POWER SUPPLY > 24V
-C	POWER SUPPLY 24 VDC, CONTROL / DIGITAL INPUT/OUTPUT
-E	LIGHTING, SOCKET, HEATING/COOLING, VENTILATION
-M	MEASUREMENTS, ANALOGICAL SIGNALS
-S	COMMUNICATION
-T	TELEPHONE - INTERCOM

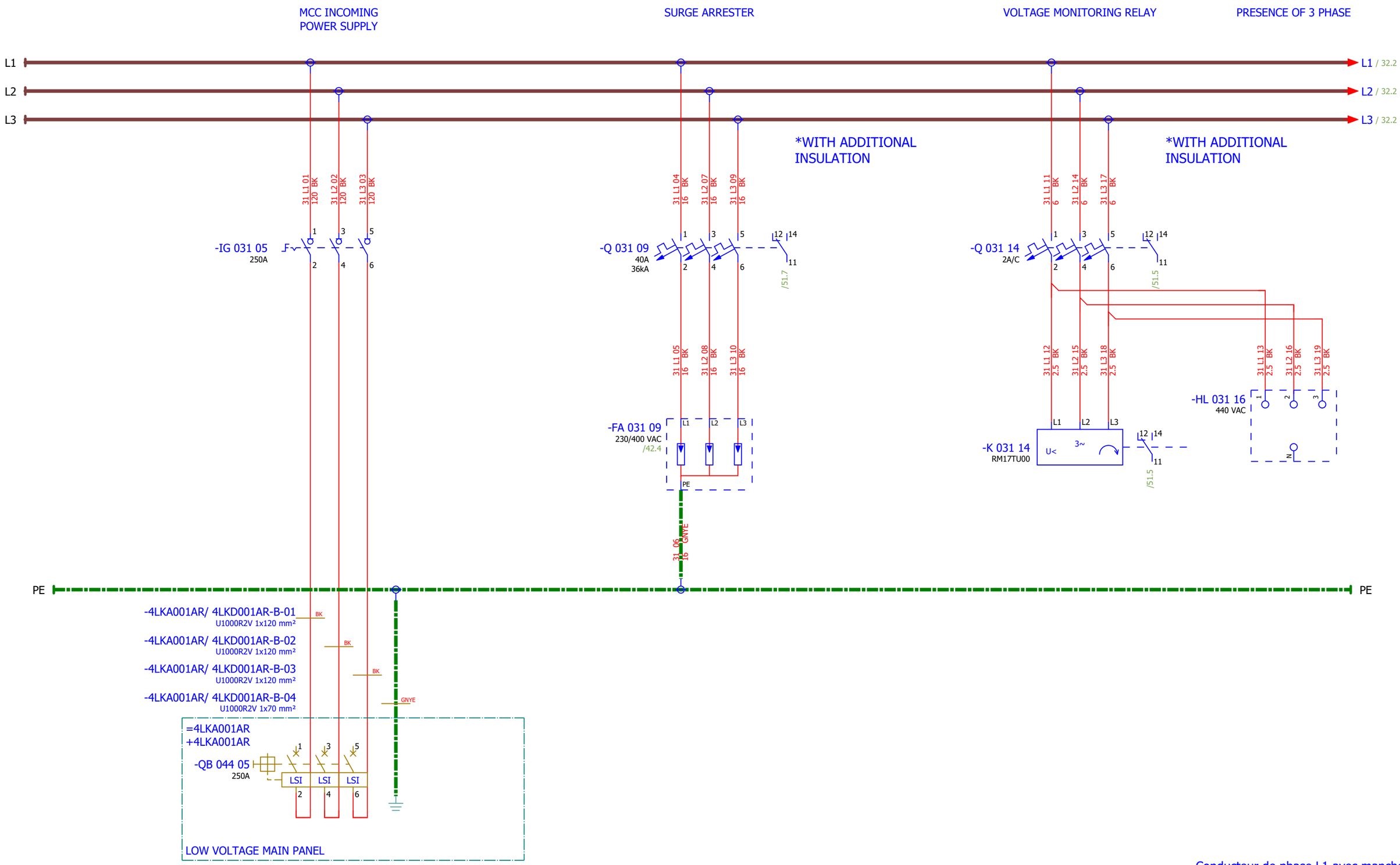

NOTE:
Conducteur de phase L1 avec manchon noir
Conducteur de phase L2 avec manchon marron
Conducteur de phase L3 avec manchon rouge

Date:	17.03.2026.	SINTAKSA A Voith Company	Client:	ANDRITZ TEP d.o.o. Ulica 108. brigade ZNG 84, 35000 Slavonski Brod, Croatia	Scope: BOILER/LOW VOLTAGE CABINET BOILER (NORMAL) 1	Project: BRC-4	Unit & Issuer: ATEP0	Number: 1874	Revision: G
Drawn:	Luka Božičević								#D
Approved:	Grga Kolić		Object:	RDF Albioma Les Bois Rouge Reunion - France	Content: 400VAC INCOMING SUPPLY	Drawing designation: BRC-4-ATEP0-1874-G			=4LKD001AR
Format:	A3								+4LKD001AR

Sheet: 31
Next: 32

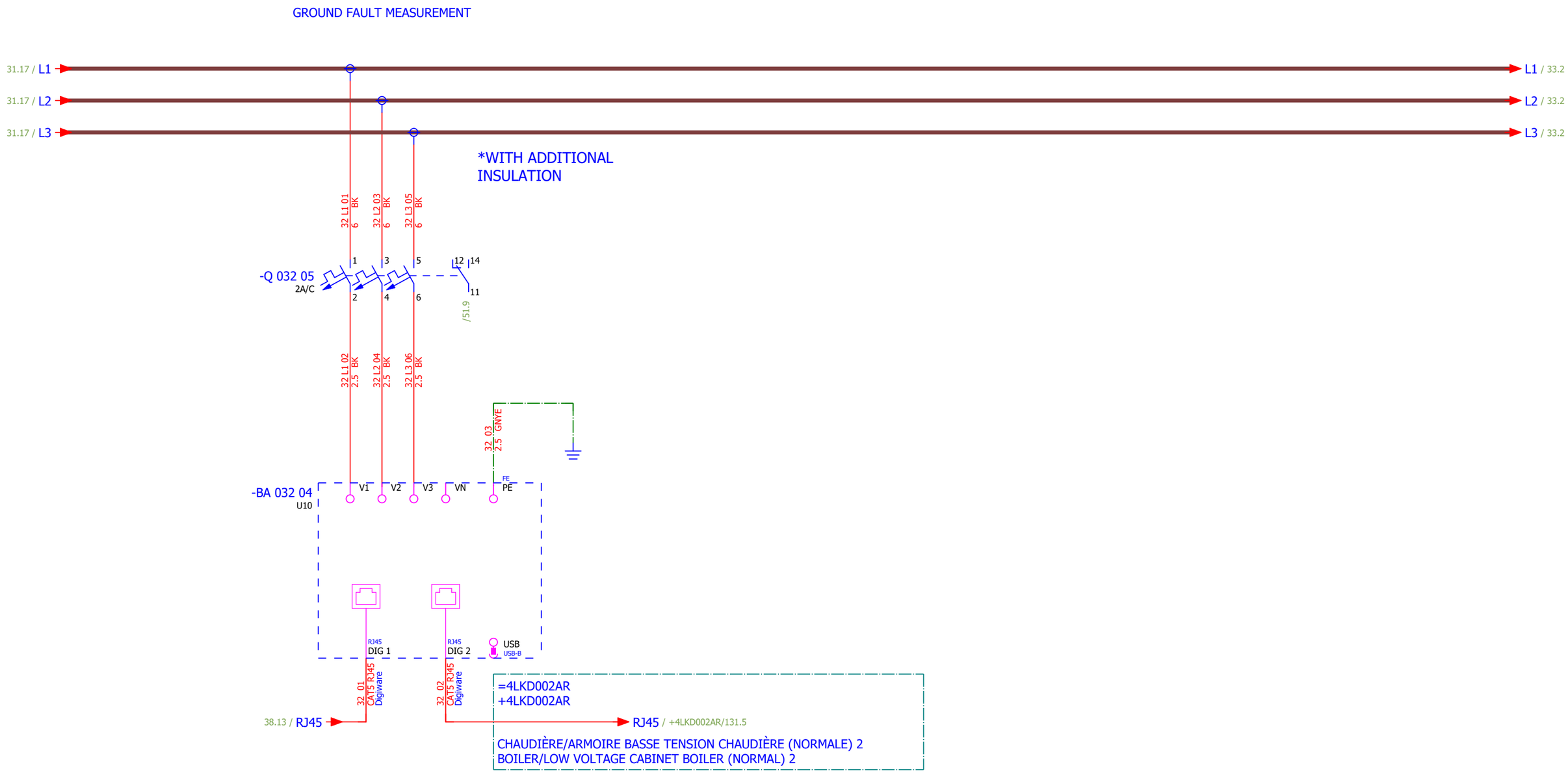

NOTE:
Conducteur de phase L1 avec manchon noir
Conducteur de phase L2 avec manchon marron
Conducteur de phase L3 avec manchon rouge

Date:	17.03.2026.	SINTAKSA A Voith Company	Client:	ANDRITZ TEP d.o.o. Ulica 108. brigade ZNG 84, 35000 Slavonski Brod, Croatia	Scope: BOILER/LOW VOLTAGE CABINET BOILER (NORMAL) 1	Project: BRC-4	Unit & Issuer: ATEP0	Number: 1874	Revision: G
Drawn:	Luka Božičević								#D
Approved:	Grga Kolić		Object:	RDF Albioma Les Bois Rouge Reunion - France	Content: 400VAC INCOMING SUPPLY	Drawing designation: BRC-4-ATEP0-1874-G		=4LKD001AR	Sheet: 32
Format:	A3							+4LKD001AR	Next: 33

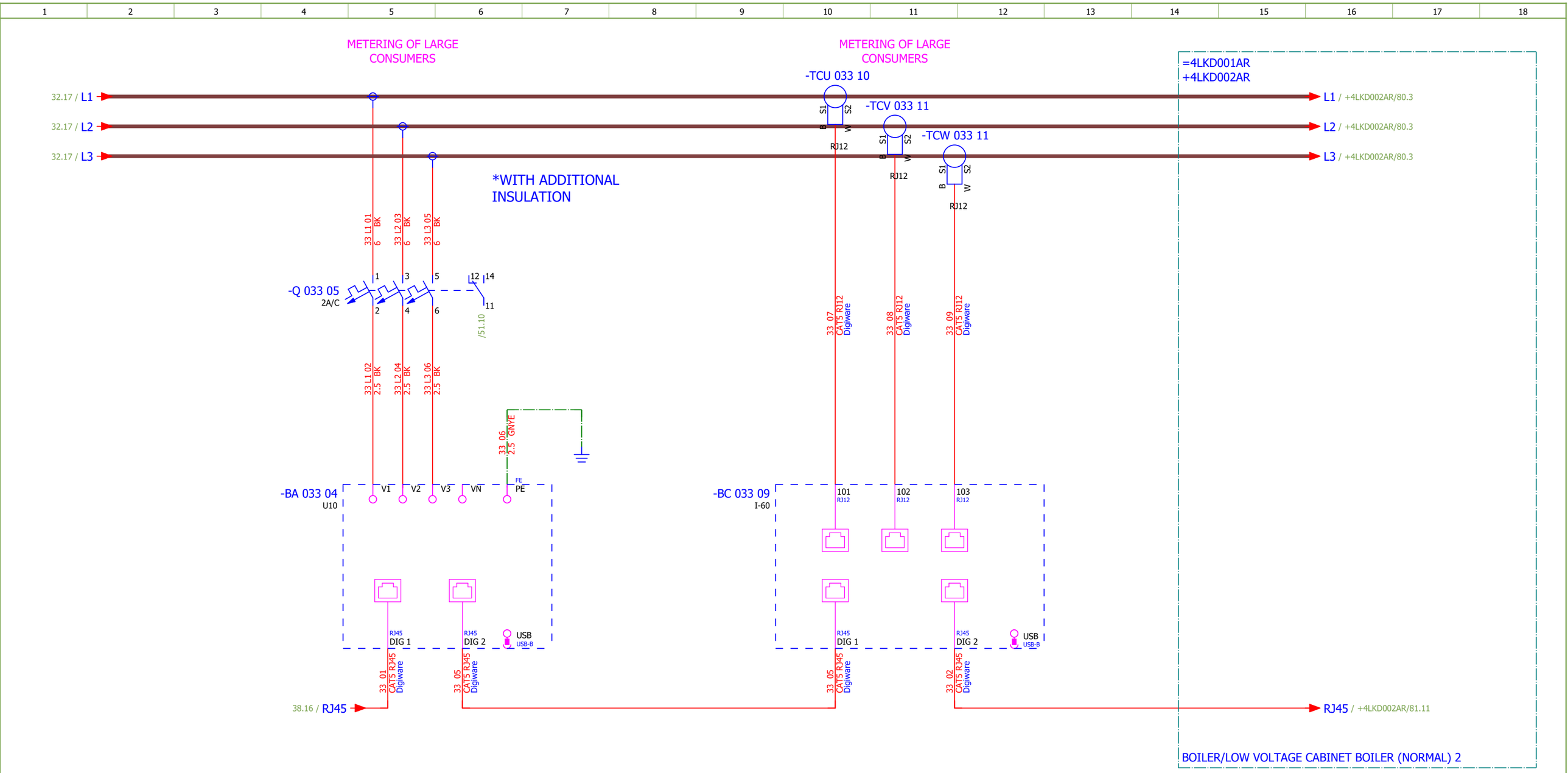

NOTE:
Conducteur de phase L1 avec manchon noir
Conducteur de phase L2 avec manchon marron
Conducteur de phase L3 avec manchon rouge

Date:	17.03.2026.	SINTAKSA A Voith Company	Client: ANDRITZ TEP d.o.o. Ulica 108. brigade ZNG 84, 35000 Slavonski Brod, Croatia	Scope: BOILER/LOW VOLTAGE CABINET BOILER (NORMAL) 1	Project: BRC-4	Unit & Issuer: ATEP0	Number: 1874	Revision: G	#D
Drawn:	Luka Božičević								
Approved:	Grga Kolić		Object: RDF Albioma Les Bois Rouge Reunion - France	Content: 400VAC INCOMING SUPPLY	Drawing designation: BRC-4-ATEP0-1874-G			=4LKD001AR	Sheet: 33
Format:	A3							+4LKD001AR	Next: 34

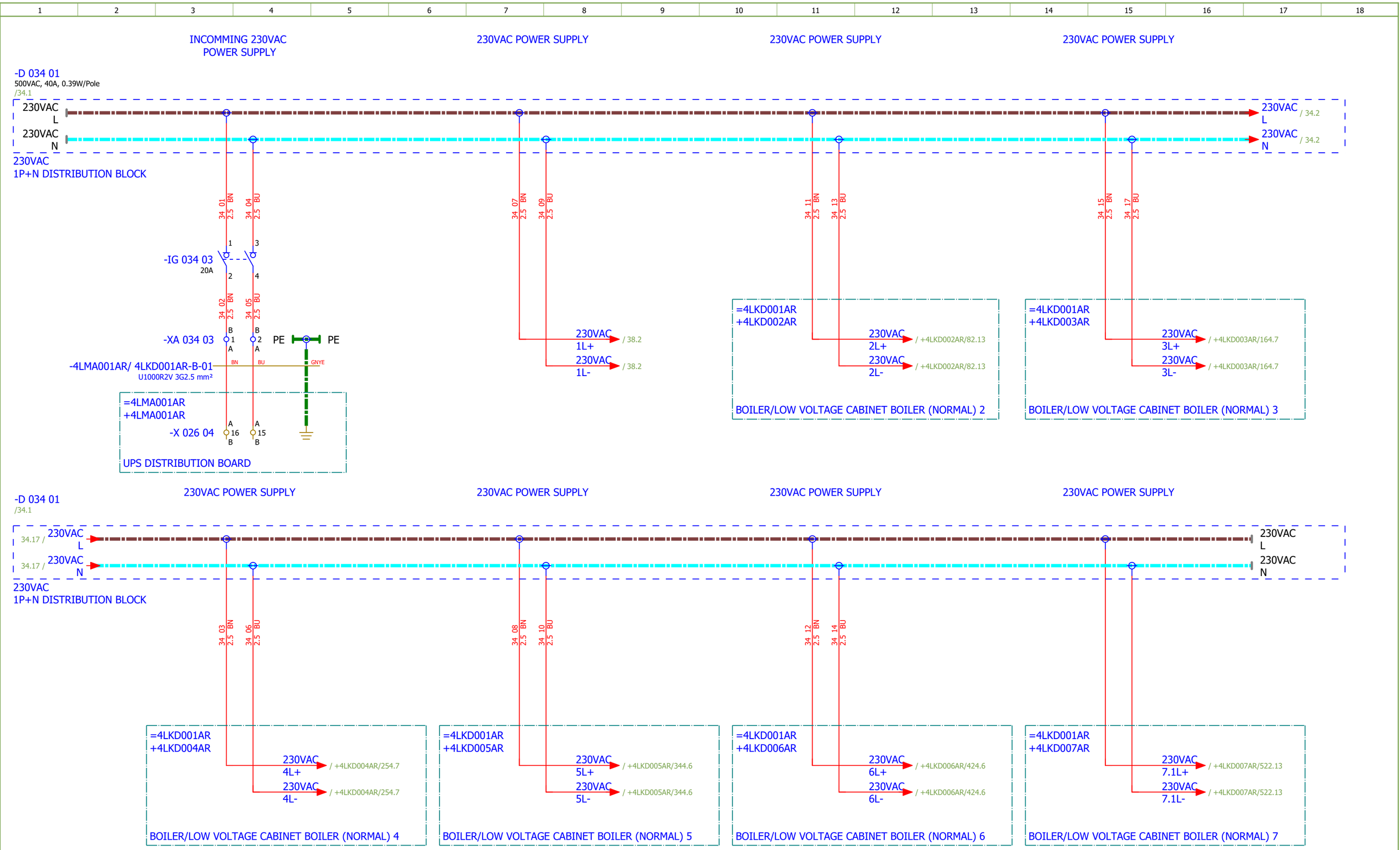

Date:	17.03.2026.	SINTAKSA A Voith Company	Client: ANDRITZ TEP d.o.o. Ulica 108. brigade ZNG 84, 35000 Slavonski Brod, Croatia	Scope: BOILER/LOW VOLTAGE CABINET BOILER (NORMAL) 1	Project: BRC-4	Unit & Issuer: ATEP0	Number: 1874	Revision: G	
Drawn:	Luka Božičević								#D
Approved:	Grga Kolić		Object: RDF Albioma Les Bois Rouge Reunion - France	Content: 230VAC DISTRIBUTION	Drawing designation: BRC-4-ATEP0-1874-G			=4LKD001AR	Sheet: 34
Format:	A3							+4LKD001AR	Next: 35

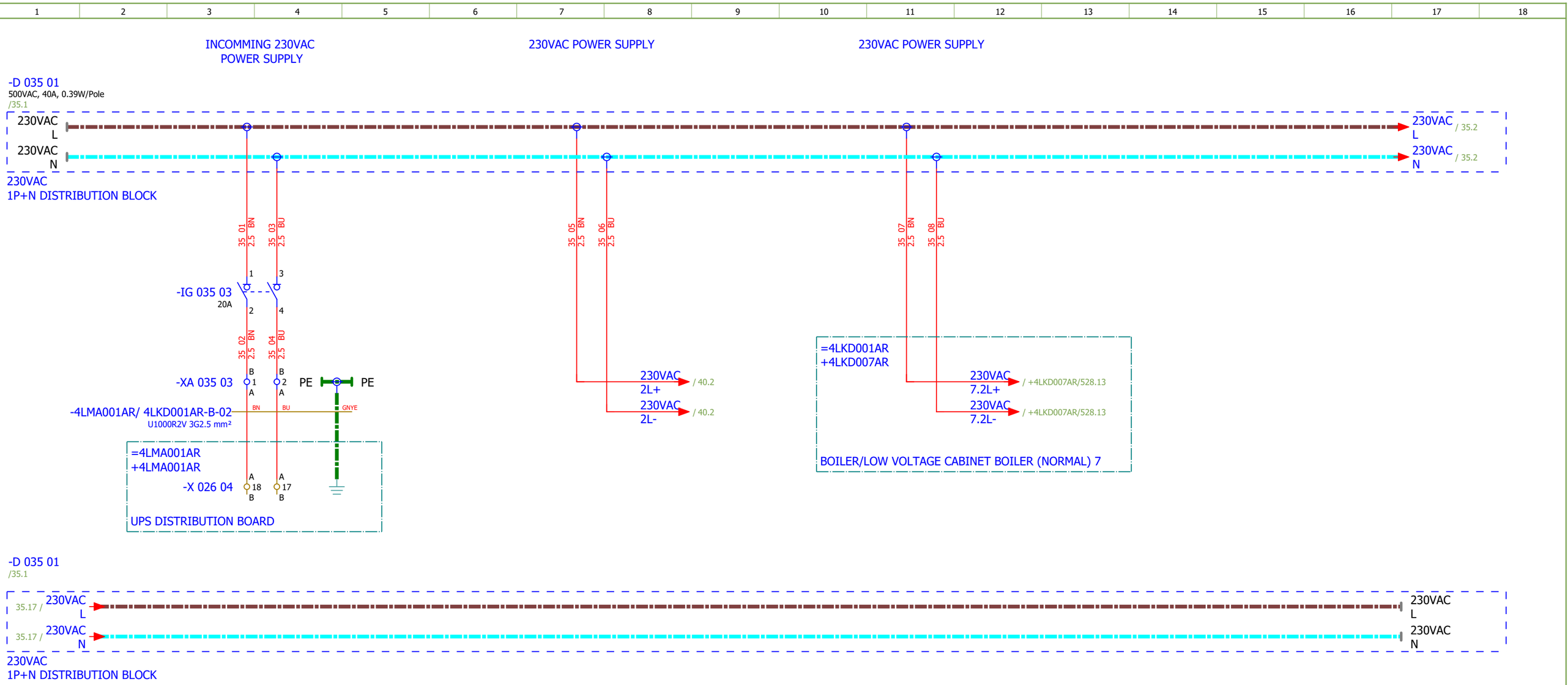

Date:	17.03.2026.	SINTAKSA A Voith Company	Client:	ANDRITZ TEP d.o.o. Ulica 108. brigade ZNG 84, 35000 Slavonski Brod, Croatia	Scope: BOILER/LOW VOLTAGE CABINET BOILER (NORMAL) 1	Project: BRC-4	Unit & Issuer: ATEP0	Number: 1874	Revision: G
Drawn:	Luka Božičević								#D
Approved:	Grga Kolić		Object:	RDF Albioma Les Bois Rouge Reunion - France	Content: 230VAC DISTRIBUTION	Drawing designation: BRC-4-ATEP0-1874-G			=4LKD001AR
Format:	A3								+4LKD001AR

Sheet: 35
Next: 36

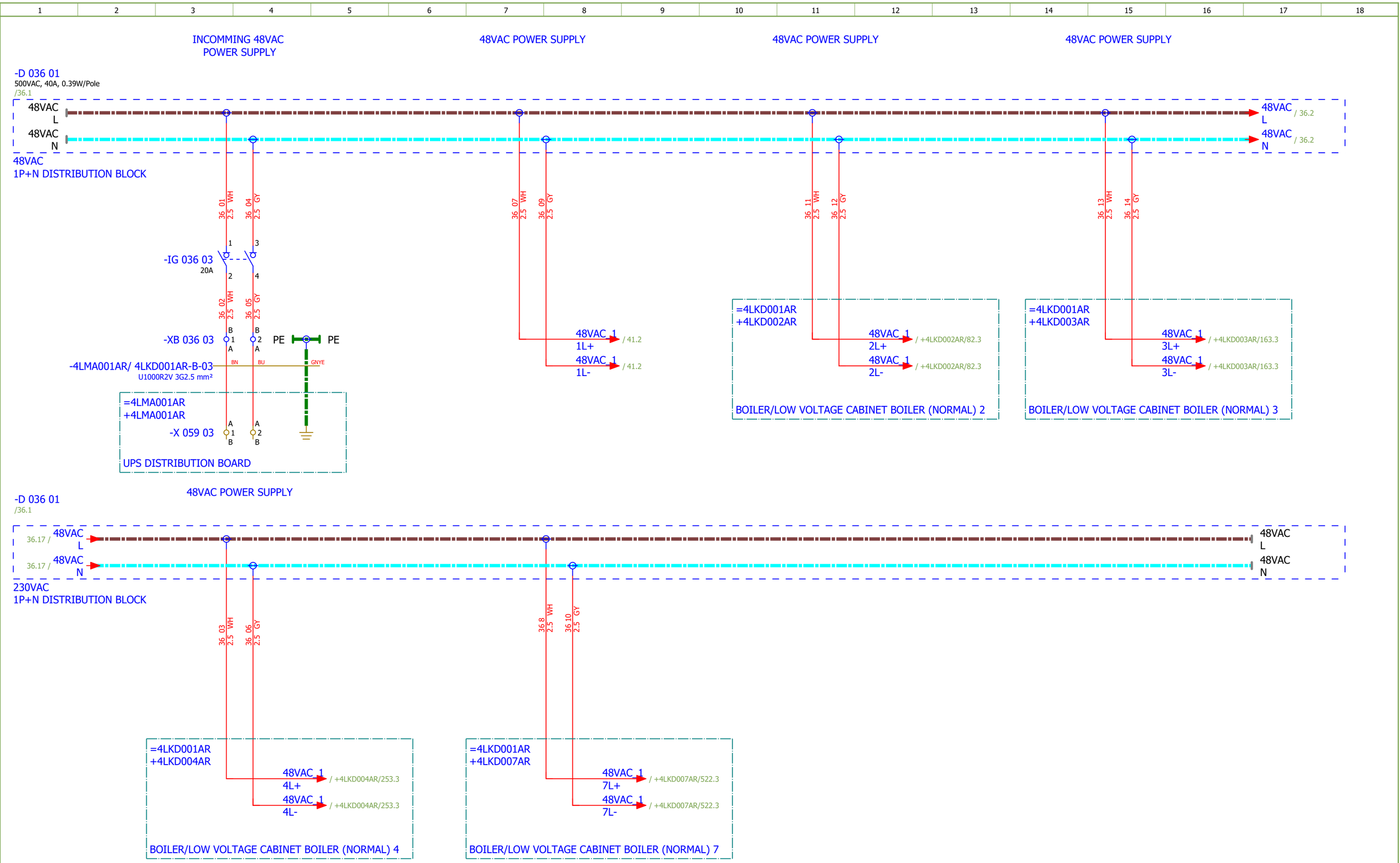

Date:	17.03.2026.	SINTAKSA A Voith Company	Client: ANDRITZ TEP d.o.o. Ulica 108. brigade ZNG 84, 35000 Slavonski Brod, Croatia	Scope: BOILER/LOW VOLTAGE CABINET BOILER (NORMAL) 1	Project: BRC-4	Unit & Issuer: ATEP0	Number: 1874	Revision: G	
Drawn:	Luka Božičević								#D
Approved:	Grga Kolić		Object: RDF Albioma Les Bois Rouge Reunion - France	Content: 48VAC DISTRIBUTION	Drawing designation: BRC-4-ATEP0-1874-G			=4LKD001AR	Sheet: 36
Format:	A3							+4LKD001AR	Next: 37

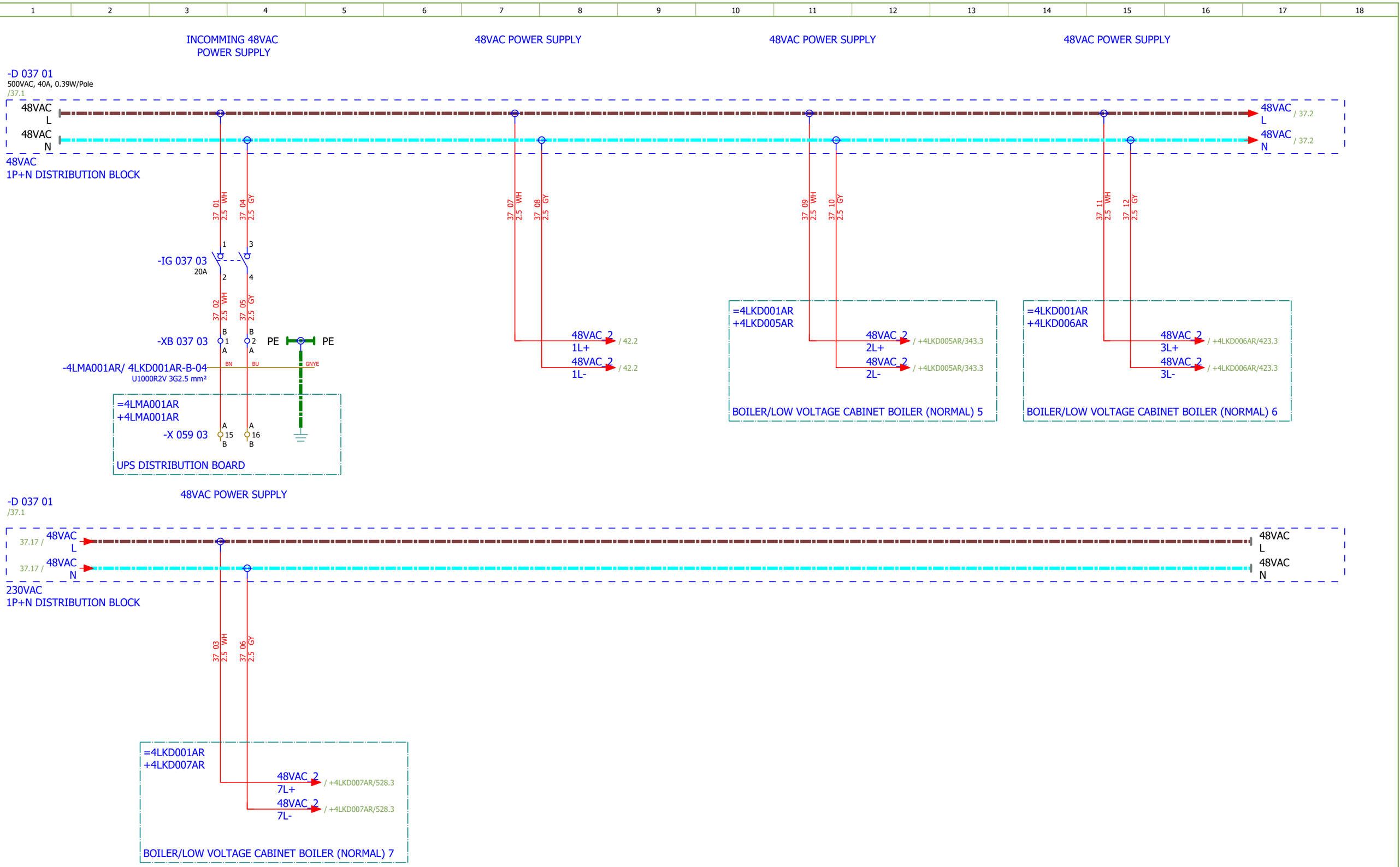

Date:	17.03.2026.	SINTAKSA A Voith Company	Client:	ANDRITZ TEP d.o.o. Ulica 108. brigade ZNG 84, 35000 Slavonski Brod, Croatia	Scope: BOILER/LOW VOLTAGE CABINET BOILER (NORMAL) 1	Project: BRC-4	Unit & Issuer: ATEP0	Number: 1874	Revision: G
Drawn:	Luka Božičević		Object:	RDF Albioma Les Bois Rouge Reunion - France	Content: 48VAC DISTRIBUTION	Drawing designation: BRC-4-ATEP0-1874-G			=4LKD001AR
Approved:	Grga Kolić								+4LKD001AR
Format:	A3								

#D

Sheet: 37

Next: 38

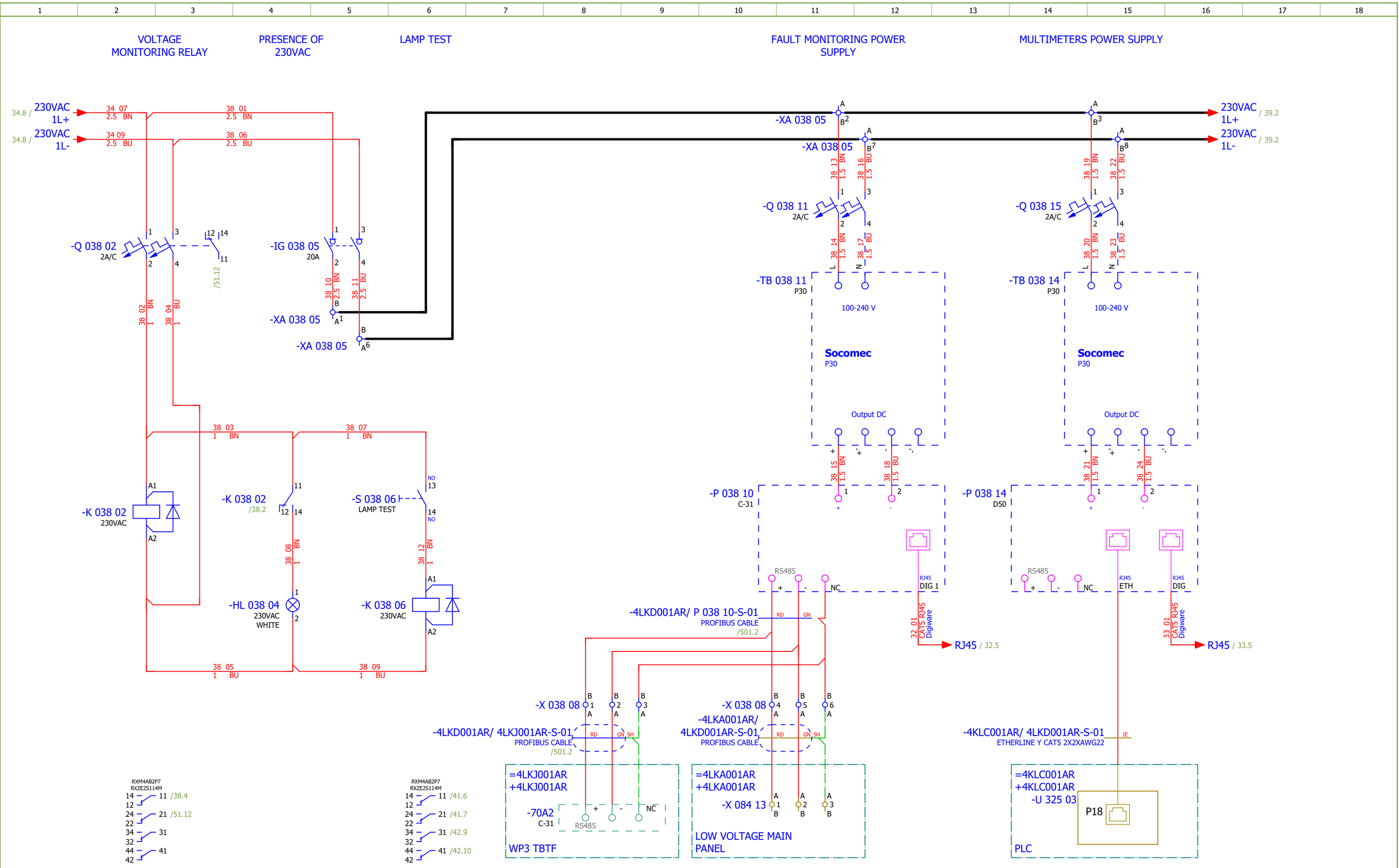

Date:	17.03.2026.	SINTAKSA A Voith Company	Client:	ANDRITZ TEP d.o.o. Ulica 108. brigade ZNG 84, 35000 Slavonski Brod, Croatia	Scope:	BOILER/LOW VOLTAGE CABINET BOILER (NORMAL) 1	Project: BRC-4	Unit & Issuer: ATEP0	Number: 1874	Revision: G
Drawn:	Luka Božičević									#D
Approved:	Grga Kolić		Object:	RDF Albioma Les Bois Rouge Reunion - France	Content:	230VAC DISTRIBUTION	Drawing designation: BRC-4-ATEP0-1874-G			=4LKD001AR
Format:	A3									+4LKD001AR

Sheet: 38
Next: 39

SPARE

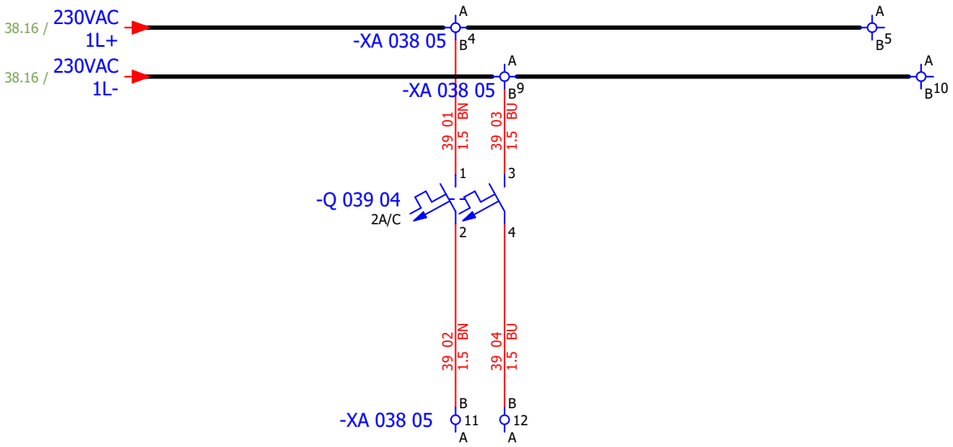

Date:	17.03.2026.	SINTAKSA A Voith Company	Client:	ANDRITZ TEP d.o.o. Ulica 108. brigade ZNG 84, 35000 Slavonski Brod, Croatia	Scope: BOILER/LOW VOLTAGE CABINET BOILER (NORMAL) 1	Project: BRC-4	Unit & Issuer: ATEP0	Number: 1874	Revision: G
Drawn:	Luka Božičević								#D
Approved:	Grga Kolić		Object:	RDF Albioma Les Bois Rouge Reunion - France	Content: 230VAC DISTRIBUTION	Drawing designation: BRC-4-ATEP0-1874-G			=4LKD001AR
Format:	A3								+4LKD001AR

Sheet: 39
Next: 40

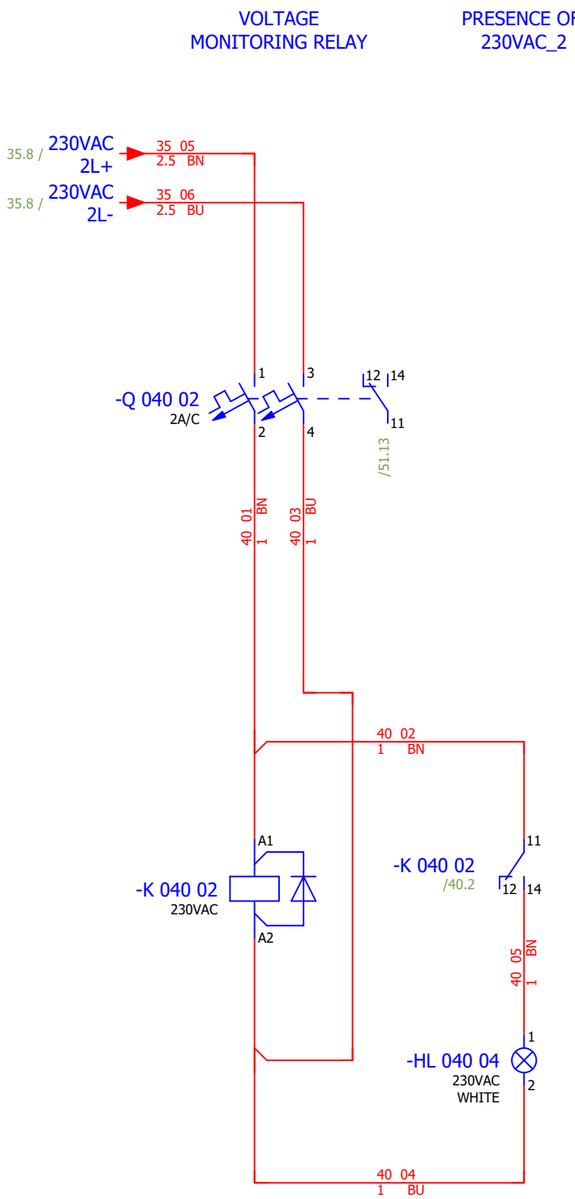

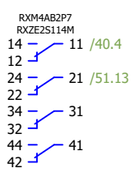

Date:	17.03.2026.	SINTAKSA A Voith Company	Client:	ANDRITZ TEP d.o.o. Ulica 108. brigade ZNG 84, 35000 Slavonski Brod, Croatia	Scope: BOILER/LOW VOLTAGE CABINET BOILER (NORMAL) 1	Project: BRC-4	Unit & Issuer: ATEP0	Number: 1874	Revision: G
Drawn:	Luka Božičević								#D
Approved:	Grga Kolić		Object:	RDF Albioma Les Bois Rouge Reunion - France	Content: 230VAC DISTRIBUTION	Drawing designation: BRC-4-ATEP0-1874-G			=4LKD001AR
Format:	A3								+4LKD001AR

Sheet: 40
Next: 41

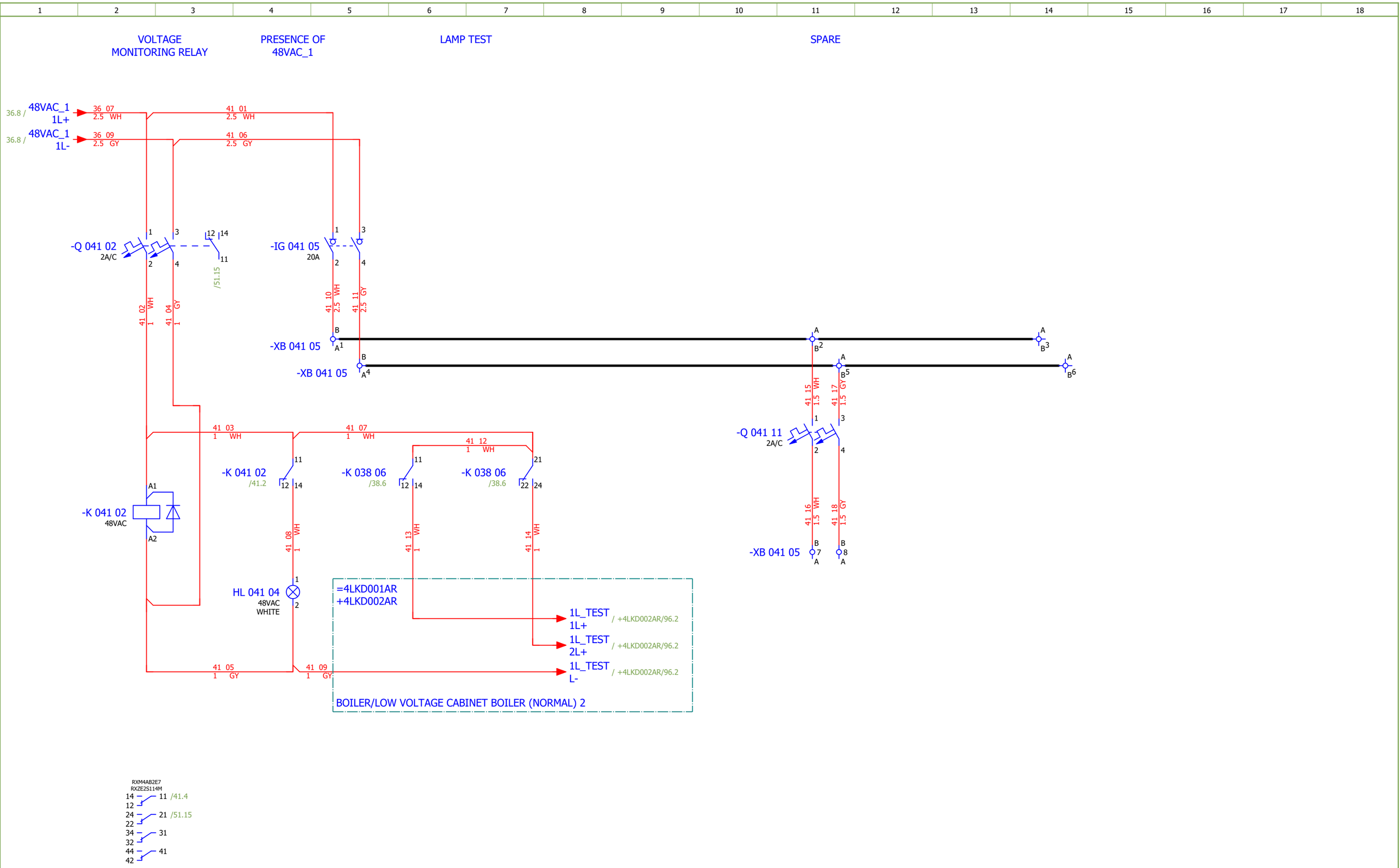

Date:	17.03.2026.	SINTAKSA A Voith Company	Client: ANDRITZ TEP d.o.o. Ulica 108. brigade ZNG 84, 35000 Slavonski Brod, Croatia	Scope: BOILER/LOW VOLTAGE CABINET BOILER (NORMAL) 1	Project: BRC-4	Unit & Issuer: ATEP0	Number: 1874	Revision: G	
Drawn:	Luka Božičević								#D
Approved:	Grga Kolić		Object: RDF Albioma Les Bois Rouge Reunion - France	Content: 48VAC DISTRIBUTION 1	Drawing designation: BRC-4-ATEP0-1874-G			=4LKD001AR	Sheet: 41
Format:	A3							+4LKD001AR	Next: 42

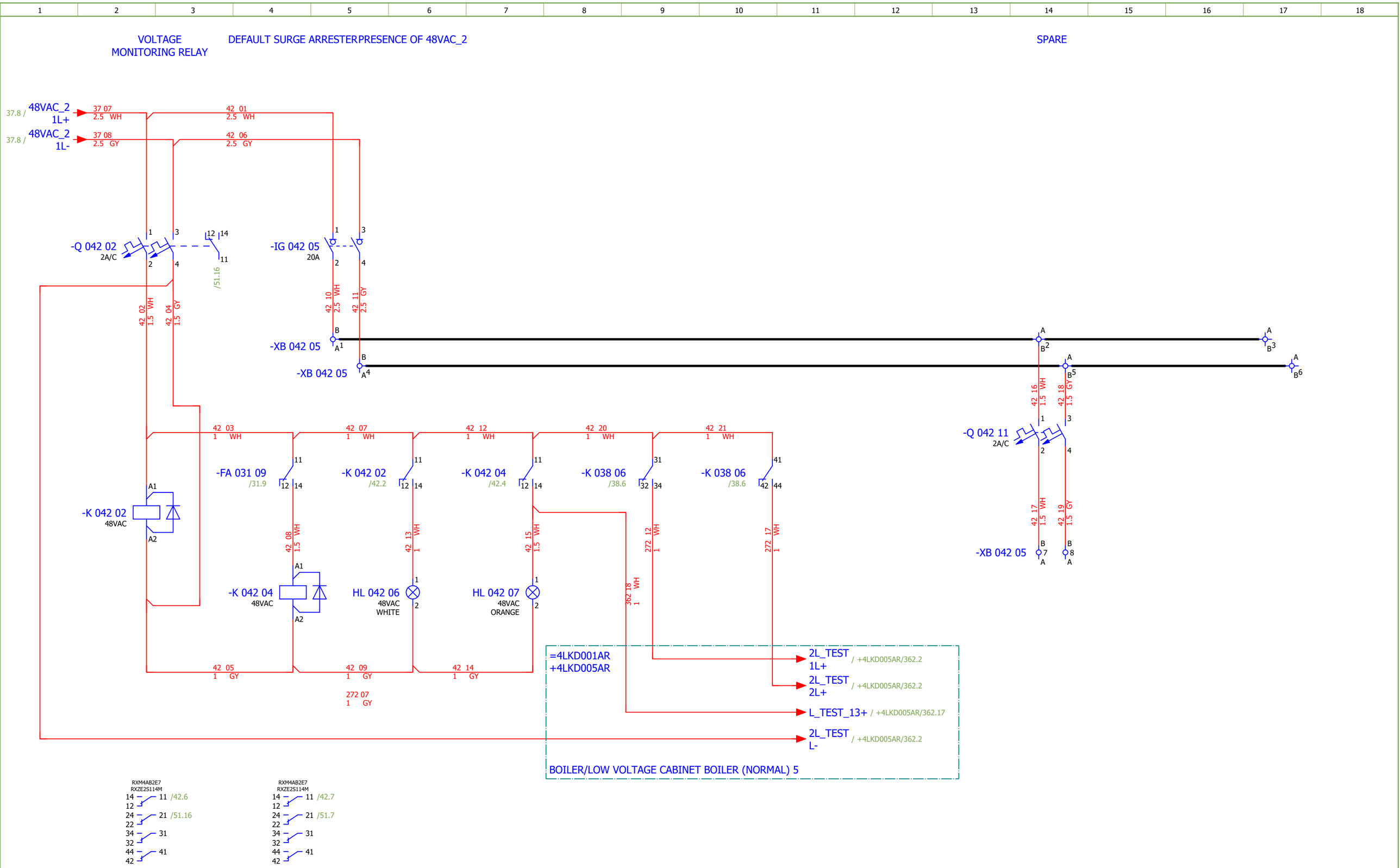

Date:	17.03.2026.	SINTAKSA A Voith Company	Client: ANDRITZ TEP d.o.o. Ulica 108. brigade ZNG 84, 35000 Slavonski Brod, Croatia	Scope: BOILER/LOW VOLTAGE CABINET BOILER (NORMAL) 1	Project: BRC-4	Unit & Issuer: ATEP0	Number: 1874	Revision: G	#D
Drawn:	Luka Božičević								
Approved:	Grga Kolić		Object: RDF Albioma Les Bois Rouge Reunion - France	Content: 48VAC DISTRIBUTION 2	Drawing designation: BRC-4-ATEP0-1874-G			=4LKD001AR	Sheet: 42
Format:	A3							+4LKD001AR	Next: 51

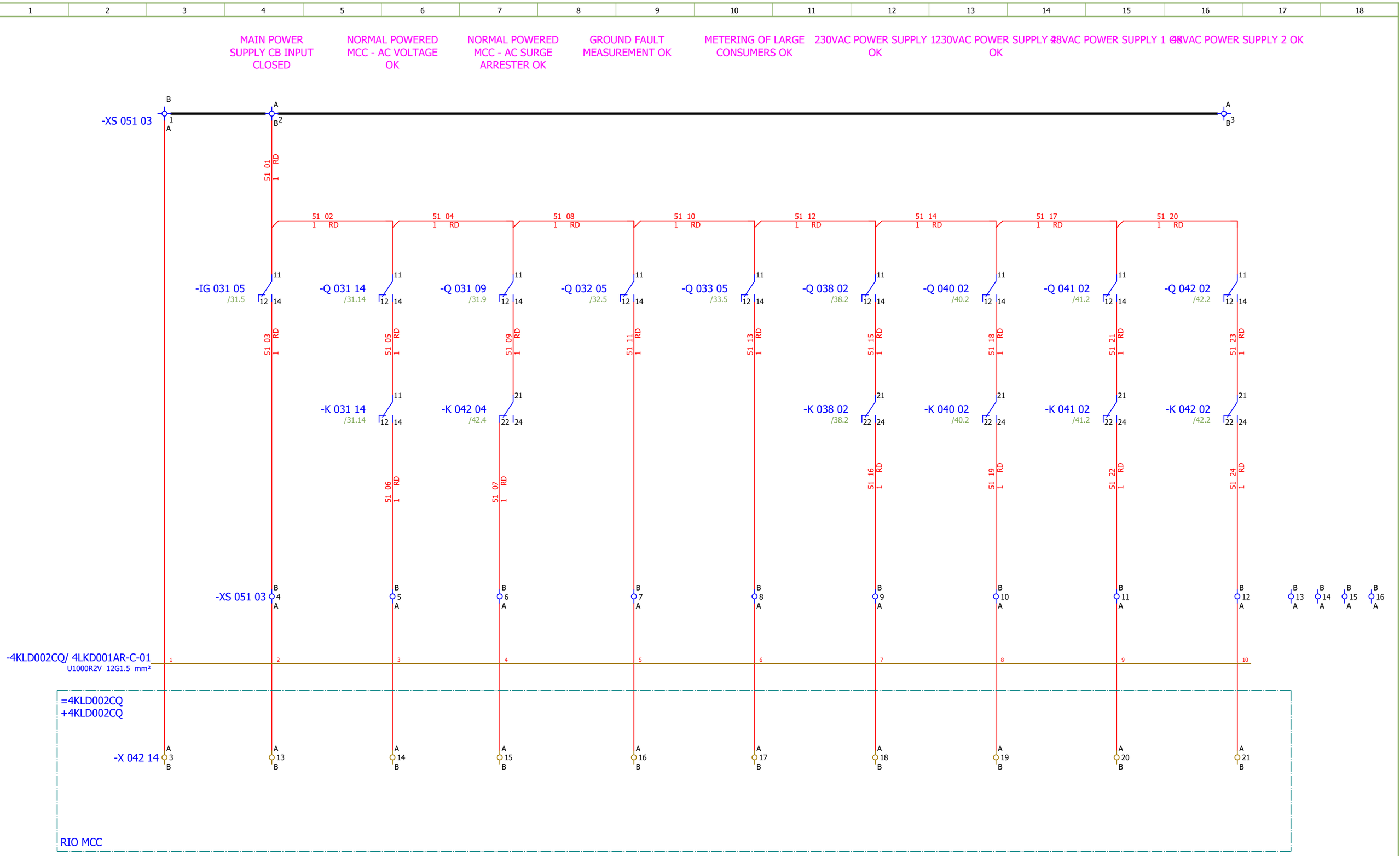

Date:	17.03.2026.	SINTAKSA A Voith Company	Client:	ANDRITZ TEP d.o.o. Ulica 108. brigade ZNG 84, 35000 Slavonski Brod, Croatia	Scope: BOILER/LOW VOLTAGE CABINET BOILER (NORMAL) 1	Project: BRC-4	Unit & Issuer: ATEP0	Number: 1874	Revision: G
Drawn:	Luka Božičević								#QA
Approved:	Grga Kolić		Object:	RDF Albioma Les Bois Rouge Reunion - France	Content: SIGNALIZATION	Drawing designation: BRC-4-ATEP0-1874-G			=4LKD001AR
Format:	A3								+4LKD001AR

Sheet: 51
Next: 55

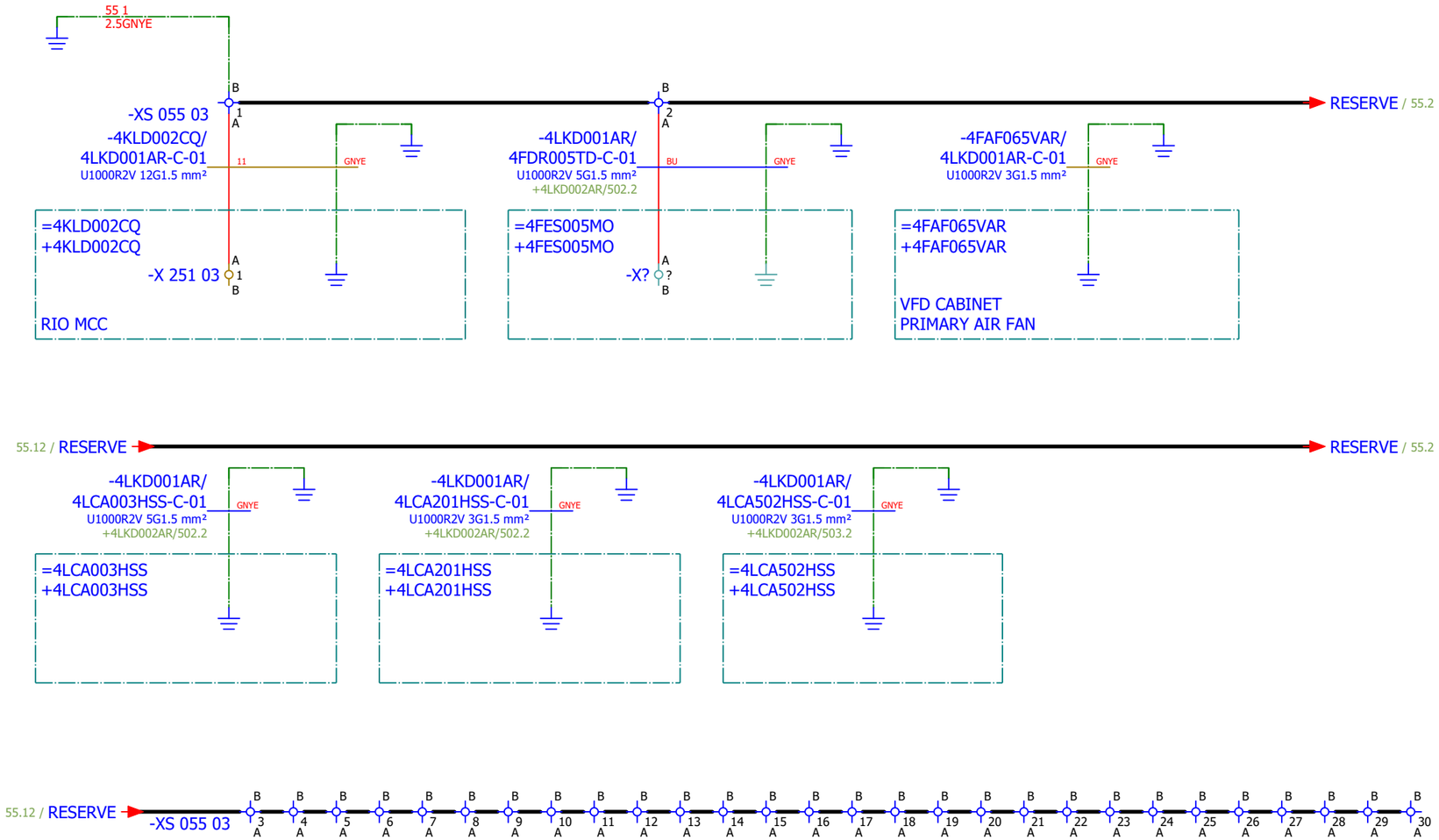

Date:	17.03.2026.	SINTAKSA A Voith Company	Client:	ANDRITZ TEP d.o.o. Ulica 108. brigade ZNG 84, 35000 Slavonski Brod, Croatia	Scope: BOILER/LOW VOLTAGE CABINET BOILER (NORMAL) 1	Project: BRC-4	Unit & Issuer: ATEP0	Number: 1874	Revision: G
Drawn:	Luka Božičević								#QB
Approved:	Grga Kolić		Object:	RDF Albioma Les Bois Rouge Reunion - France	Content: SPARE	Drawing designation: BRC-4-ATEP0-1874-G			=4LKD001AR
Format:	A3								+4LKD001AR

Sheet: 55
Next: 401

Sorting number	Part number	Quantity	Manufacturer	Device	Device description	Device designation
1.	SOC.48290105	2	Socomec	DIRIS Digiware U-10 Voltage	50-300 VAC (Ph/N) - 87-520 VAC (Ph/Ph) - CAT III Frequency range 45-65 Hz Network type Single-phase/ Two-phase / Two-phase with neutral / Three-phase / Three-phase with neutral Input consumption ≤ 0,1 VA	-BA 032 04;-BA 033 04
2.	SOC.48290112	1	Socomec	Current module DIRIS Digiware I-60, 6 current inputs, Metering	Current module DIRIS Digiware I-60, 6 current inputs, Metering	-BC 033 09
3.	EFX.563720	4	nVent ERIFLEX	BD Two Pole Distribution Block, 40 A	BD Two Pole Distribution Block, 40 A	-D 034 01;-D 035 01;-D 036 01;-D 037 01
4.	SE.A9L40321	1	Schneider Electric	IPRD40r	IPRD40r modular surge arrester - 3P - IT - 460V - with remote transfert	-FA 031 09
5.	SE.XB5EV57L4	1	Schneider Electric	3 phases voltage indicator pilot light with 3 white LED, 400 VAC	Pilot light 3 phases voltage, indicator with 3 LED, white, 400 V AC	-HL 031 16
6.	SE.XB4BVM1	2	Schneider Electric	White pilot light	metal, 22mm, universal LED, plain lens, Color: White 230VAC	-HL 038 04;-HL 040 04
7.	SE.ZBZ32	6	Schneider Electric	Harmony XB4	Legend holder, plastic	-HL 038 04;-HL 040 04;-HL 041 04;-HL 042 06;-HL 04 2 07;-S 038 06
8.	SE.ZB4BVBG1	3	Schneider Electric	white light block with body/fixing collar integral LED 24...120VAC/DC	white light block with body/fixing collar integral LED 24...120VAC/DC	-HL 041 04;-HL 042 06;-HL 042 07
9.	SE.ZB4BV013	2	Schneider Electric	white pilot light head Ø22 plain lens for integral LED	Head for pilot light, Harmony XB4, metal, white, 22mm, universal LED, plain lens	-HL 041 04;-HL 042 06
10.	SE.ZB4BV053	1	Schneider Electric	Orange pilot light head Ø22 plain lens for integral LED	Complete body light block assembly, Harmony XB4, metal, universal LED, body fixing collar, 24...120V AC DC Head for pilot light: Orange	-HL 042 07
11.	SE.31106	1	Schneider Electric	Switch-disconnector Compact INS250 - 3 poles - 250A	Switch-disconnector Compact INS250 - 3 poles - 250A, Black handle	-IG 031 05
12.	SE.29450	1	Schneider Electric	Auxiliary contact 1 OF or 1 SD or 1 SDE or 1 SDV	Auxiliary contact 1 OF or 1 SD or 1 SDE or 1 SDV	-IG 031 05
13.	SE.LV429518	2	Schneider Electric	Long terminal shield - 4 poles - <= 250A	Long terminal shield - 4 poles - <= 250A	-IG 031 05
14.	SE.A9S60220	7	Schneider Electric	Control switch iSW, 2P, 20A	Acti 9 iSW 2P 20 A at 415 V AC 50/60 Hz	-IG 034 03;-IG 035 03;-IG 036 03;-IG 037 03;-IG 038 05;-IG 041 05;-IG 042 05
15.	SE.RM17TU00	1	Schneider Electric	RM17-TU	multifunction control relay RM17-TU - range 183..528 V AC	-K 031 14
16.	SE.RXM4AB2P7	3	Schneider Electric	Miniature Plug-in relay - Zelio RXM 4 C/O 230 V AC 6 A with LED	Miniature Plug-in relay - Zelio RXM 4 C/O 230 V AC 6 A with LED	-K 038 02;-K 038 06;-K 040 02
17.	SE.RXZE2S114M	6	Schneider Electric	Socket	For RXM2/RXM4 relays Screw connectors Separate contact 4 C/O	-K 038 02;-K 038 06;-K 040 02;-K 041 02;-K 042 02;-K 042 04
18.	SE.RXM041FU7	3	Schneider Electric	Protection module	RC circuit - 110..240 V AC - for RPZ/RXZ sockets	-K 038 02;-K 038 06;-K 040 02
19.	SE.RXM4AB2E7	3	Schneider Electric	Miniature Plug-in relay - Zelio RXM 4 C/O 48 V AC 6 A with LED	Miniature Plug-in relay - Zelio RXM 4 C/O 48 V AC 6 A with LED	-K 041 02;-K 042 02;-K 042 04
20.	SE.RXM041BN7	1	Schneider Electric	Protection diode	RC circuit - 24..60 V AC - for RPZ/RXZ sockets	-K 041 02
21.	SE.RXM021BN	2	Schneider Electric	Varistor - 24..60 V AC/DC - for RPZ/RXZ sockets	Varistor - 24..60 V AC/DC - for RPZ/RXZ sockets	-K 042 02;-K 042 04

Sorting number	Part number	Quantity	Manufacturer	Device	Device description	Device designation
22.	SOC.48290101	1	Socomec	ISOM DIGIWARE C-31 INTERFACE	Supply voltage DC [V] - 24..24 Voltage type (supply voltage) - DC Colour display - No Degree of protection (IP) - IP65 Operating temperature [°C] - 10..55 Rail mounting possible - Yes Wall mounting/direct mounting - Yes	-P 038 10
23.	SOC.48290204	1	Socomec	Multi-point remote display DIRIS Digiware D-50 RS485 & Ethernet	Multi-point remote display DIRIS Digiware D-50 RS485 & Ethernet	-P 038 14
24.	SE.18728	1	Schneider Electric	NG125 - circuit breaker - 3P - 40A - B curve - 36kA	NG125 - circuit breaker - NG125H - 3P - 40A - C curve - 36kA 36 kA Icu at 380...415 V AC 50/60 Hz conforming to EN/IEC 60947-2	-Q 031 09
25.	SE.A9F74302	3	Schneider Electric	3-pole MCB	Nominal current: 2A Tripping curve: C Breaking capacity: 10kA	-Q 031 14;-Q 032 05;-Q 033 05
26.	SE.A9A26924	8	Schneider Electric	Auxiliary contact iOF, iC60	Auxiliary contact, Acti9, iOF, 1 OC, AC/DC	-Q 031 14;-Q 032 05;-Q 033 05;-Q 038 02;-Q 040 02;-Q 041 02;-Q 042 02;-Q 112 04
27.	SE.A9F74202	12	Schneider Electric	2-pole MCB, 2A/C	Nominal current: 2 A Tripping curve: C	-Q 038 02;-Q 038 11;-Q 038 15;-Q 039 04;-Q 040 02;-Q 041 02;-Q 041 11;-Q 042 02;-Q 042 11;-Q 111 04;-Q 112 04;-Q 117 04
28.	SE.XPSBAC34AP	7	Schneider Electric	Safety module	Harmony Safety Automation Estop or guard ,Harmony XPS, connected to supply terminals 48-240 V AC/DC , no inputs, screw	-RP 111 04;-RP 112 07;-RP 113 04;-RP 114 04;-RP 11 5 04;-RP 116 04;-RP 117 04
29.	SE.XB4BA21	1	Schneider Electric	Black flush complete pushbutton Ø22 spring return 1NO "unmarked"	Black flush complete pushbutton Ø22 spring return 1NO	-S 038 06
30.	SOC.47290603	2	Socomec	P30 AUX 24 VDC 30W	Power supply P30 100-240VAC / 24 VDC 30W for Digiware system	-TB 038 11;-TB 038 14
31.	SOC.48290573	3	Socomec	TF-40 / 100-400A sensor rogowski RJ12	Loop diameter: 40mm - Loop length: 126mm	-TCU 033 10;-TCV 033 11;-TCW 033 11
32.	PXC.3209510	107	Phoenix Contact	PT 2,5 - Feed-through terminal block	Feed-through terminal block, nom. voltage: 800 V, nominal current: 24 A, number of connections: 2, number of positions: 1, connection method: Push-in connection, Rated cross section: 2.5 mm2, cross section: 0.14 mm2 - 4 mm2, mounting type: NS 35/7,5, NS 35/15, color: gray	-X 038 08;-X 111 04;-X 112 04;-X 117 04;-XA 034 03;-XA 035 03;-XA 038 05;-XB 036 03;-XB 037 03;-XB 041 05;-XB 042 05;-XS 051 03;-XS 055 03

1	2	3	4	5	6	7	8	9	10	11	12	13	14	15	16	17	18

Cable name: **4LKD001AR/ 4LKJ001AR-S-01**

Cable type: **PROFIBUS CABLE** | No. of conn., diameter, length: **/**

Remark:

Function text	Page / Column	FROM	Terminal	Conductor	TO	Terminal	Page / Column	Function text
LAMP TEST	=4LKD001AR+4LKD001AR/38.8	=4LKD001AR+4LKD001AR-X 038 08	1:A	**RD**	=4LKJ001AR+4LKJ001AR-70A2	+	=4LKD001AR+4LKD001AR/38.8	RS485
=	=4LKD001AR+4LKD001AR/38.8	=4LKD001AR+4LKD001AR-X 038 08	2:A	**GN**	=4LKJ001AR+4LKJ001AR-70A2	-	=4LKD001AR+4LKD001AR/38.8	

Cable name: **4LKD001AR/ P 038 10-S-01**

Cable type: **PROFIBUS CABLE** | No. of conn., diameter, length: **/**

Remark:

Function text	Page / Column	FROM	Terminal	Conductor	TO	Terminal	Page / Column	Function text
RS485	=4LKD001AR+4LKD001AR/38.10	=4LKD001AR+4LKD001AR-P 038 10	+	**RD**	=4LKD001AR+4LKD001AR-X 038 08	1:B	=4LKD001AR+4LKD001AR/38.8	LAMP TEST
	=4LKD001AR+4LKD001AR/38.11	=4LKD001AR+4LKD001AR-P 038 10	-	**GN**	=4LKD001AR+4LKD001AR-X 038 08	2:B	=4LKD001AR+4LKD001AR/38.8	=
	=4LKD001AR+4LKD001AR/38.11	=4LKD001AR+4LKD001AR-P 038 10	-	**GN**	=4LKD001AR+4LKD001AR-X 038 08	5:B	=4LKD001AR+4LKD001AR/38.11	=
RS485	=4LKD001AR+4LKD001AR/38.10	=4LKD001AR+4LKD001AR-P 038 10	+	**RD**	=4LKD001AR+4LKD001AR-X 038 08	4:B	=4LKD001AR+4LKD001AR/38.10	=

Terminal diagram

Strip

=4LKD001AR+4LKD001AR-X 038 08

A SIDE							B SIDE
Placement	Target designation	Cable name and type	Conductor	Jumper		Wiring	Target designation
/38.8	=4LKJ001AR+4LKJ001AR-70A2:+	4LKD001AR/ 4LKJ001AR-S-01 PROFIBUS CABLE	RD	'	1	RD	-P 038 10:+
/38.8	=4LKJ001AR+4LKJ001AR-70A2:-	4LKD001AR/ 4LKJ001AR-S-01 PROFIBUS CABLE	GN	'	2	GN	-P 038 10:-
/38.9	=4LKJ001AR+4LKJ001AR-70A2:NC		SH	'	3		
				'	4	RD	-P 038 10:+
				'	5	GN	-P 038 10:-
=4LKA001AR+4LKA001AR/84.14	=4LKA001AR+4LKA001AR-X 084 13:3:A		SH	'	6		

Date:	17.03.2026.	SINTAKSA A Voith Company	Client:	ANDRITZ TEP d.o.o. Ulica 108. brigade ZNG 84, 35000 Slavonski Brod, Croatia	Scope: BOILER/LOW VOLTAGE CABINET BOILER (NORMAL) 1	Project: BRC-4	Unit & Issuer: ATEP0	Number: 1874	Revision: G
Drawn:	Luka Božičević								#Y
Approved:	Grga Kolić		Object:	RDF Albioma Les Bois Rouge Reunion - France	Content: Terminal diagram =4LKD001AR+4LKD001AR-X 038 08	Drawing designation: BRC-4-ATEP0-1874-G			=4LKD001AR
Format:	A3								+4LKD001AR

Sheet: 601

Next: 602

Terminal diagram

Strip

=4LKD001AR+4LKD001AR-X 111 04

A SIDE							B SIDE
Placement	Target designation	Cable name and type	Conductor	Jumper		Wiring	Target designation
+4LKD002AR/111.4	=4LCA003HSS+4LCA003HSS-S303:11	4LKD001AR/ 4LCA003HSS-C-01 U1000R2V 5G1.5 mm²	BN 1.5 mm²	'	1	WH 1 mm²	-Q 111 04:2
+4LKD002AR/111.4	=4LCA003HSS+4LCA003HSS-S303:12	4LKD001AR/ 4LCA003HSS-C-01 U1000R2V 5G1.5 mm²	GY 1.5 mm²	'	2	WH 1 mm²	-RP 111 04:A1
+4LKD002AR/111.5	=4LCA003HSS+4LCA003HSS-S303:21	4LKD001AR/ 4LCA003HSS-C-01 U1000R2V 5G1.5 mm²	BK 1.5 mm²	'	3	GY 1 mm²	-Q 111 04:4
+4LKD002AR/111.5	=4LCA003HSS+4LCA003HSS-S303:22	4LKD001AR/ 4LCA003HSS-C-01 U1000R2V 5G1.5 mm²	BU 1.5 mm²	'	4	GY 1 mm²	-RP 111 04:A2
				'	5	WH 1 mm²	-RP 111 04:23
				'	6	WH 1 mm²	-RP 111 04:24
+4LKD002AR/111.17	=4FES005MO+4FES005MO-X?:?:A	4LKD001AR/ 4FES005MO-C-01 U1000R2V 5G1.5 mm²	BN 1.5 mm²	'	7	WH 1 mm²	-RP 111 04:13
+4LKD002AR/111.17	=4FES005MO+4FES005MO-X?:?:B	4LKD001AR/ 4FES005MO-C-01 U1000R2V 5G1.5 mm²	BK 1.5 mm²	'	8	WH 1 mm²	-RP 111 04:14
+4LKD002AR/111.17	=4FES005MO+4FES005MO-X?:?:B	4LKD001AR/ 4FES005MO-C-01 U1000R2V 5G1.5 mm²	GY 1.5 mm²	'	9	WH 1 mm²	-RP 111 04:Y1
				'	10		
				'	11		

Date:	17.03.2026.	SINTAKSA A Voith Company	Client:	ANDRITZ TEP d.o.o. Ulica 108. brigade ZNG 84, 35000 Slavonski Brod, Croatia	Scope: BOILER/LOW VOLTAGE CABINET BOILER (NORMAL) 1	Project: BRC-4	Unit & Issuer: ATEP0	Number: 1874	Revision: G
Drawn:	Luka Božičević								#Y
Approved:	Grga Kolić		Object:	RDF Albioma Les Bois Rouge Reunion - France	Content: Terminal diagram =4LKD001AR+4LKD001AR-X 111 04	Drawing designation: BRC-4-ATEP0-1874-G			=4LKD001AR
Format:	A3								+4LKD001AR

Sheet: 602

Next: 603

Terminal diagram

Strip

=4LKD001AR+4LKD001AR-X 112 04

A SIDE								B SIDE
Placement	Target designation	Cable name and type	Conductor	Jumper		Wiring	Target designation
+4LKD002AR/112.4	=4LCA201HSS+4LCA201HSS-S303:11	4LKD001AR/ 4LCA201HSS-C-01 U1000R2V 3G1.5 mm²	BN 1.5 mm²	'	1	WH 1 mm²	-Q 112 04:2
+4LKD002AR/112.4	=4LCA502HSS+4LCA502HSS-S303:12	4LKD001AR/ 4LCA502HSS-C-01 U1000R2V 3G1.5 mm²	BN 1.5 mm²	'	2	WH 1 mm²	-RP 112 07:A1
+4LKD002AR/112.5	=4LCA201HSS+4LCA201HSS-S303:21	4LKD001AR/ 4LCA201HSS-C-01 U1000R2V 3G1.5 mm²	BU 1.5 mm²	'	3	GY 1 mm²	-Q 112 04:4
+4LKD002AR/112.5	=4LCA502HSS+4LCA502HSS-S303:22	4LKD001AR/ 4LCA502HSS-C-01 U1000R2V 3G1.5 mm²	BU 1.5 mm²	'	4	GY 1 mm²	-RP 112 07:A2

Terminal diagram

Strip

=4LKD001AR+4LKD001AR-X 117 04

A SIDE								B SIDE
Placement	Target designation	Cable name and type	Conductor	Jumper		Wiring	Target designation
+4LKD002AR/117.4	=4LCA004HSS+4LCA004HSS-S303:11	4LKF002AR/ 4LCA004HSS-C-01 U1000R2V 5G1.5 mm²	BN 1.5 mm²	'	1	WH 1 mm²	-Q 117 04:2
+4LKD002AR/117.4	=4LCA004HSS+4LCA004HSS-S303:12	4LKF002AR/ 4LCA004HSS-C-01 U1000R2V 5G1.5 mm²	GY 1.5 mm²	'	2	WH 1 mm²	-RP 117 04:A1
+4LKD002AR/117.5	=4LCA004HSS+4LCA004HSS-S303:21	4LKF002AR/ 4LCA004HSS-C-01 U1000R2V 5G1.5 mm²	BK 1.5 mm²	'	3	GY 1 mm²	-Q 117 04:4
+4LKD002AR/117.5	=4LCA004HSS+4LCA004HSS-S303:22	4LKF002AR/ 4LCA004HSS-C-01 U1000R2V 5G1.5 mm²	BU 1.5 mm²	'	4	GY 1 mm²	-RP 117 04:A2

Terminal diagram

Strip

=4LKD001AR+4LKD001AR-XA 034 03

A SIDE						B SIDE
Placement	Target designation	Cable name and type	Conductor	Jumper	Wiring	Target designation
				' 1	BN 2.5 mm²	-IG 034 03:2
				' 2	BU 2.5 mm²	-IG 034 03:4

Terminal diagram

Strip

=4LKD001AR+4LKD001AR-XA 035 03

A SIDE						B SIDE
Placement	Target designation	Cable name and type	Conductor	Jumper	Wiring	Target designation
				' 1	BN 2.5 mm²	-IG 035 03:2
				' 2	BU 2.5 mm²	-IG 035 03:4

Date:	17.03.2026.	SINTAKSA A Voith Company	Client:	ANDRITZ TEP d.o.o. Ulica 108. brigade ZNG 84, 35000 Slavonski Brod, Croatia	Scope: BOILER/LOW VOLTAGE CABINET BOILER (NORMAL) 1	Project: BRC-4	Unit & Issuer: ATEP0	Number: 1874	Revision: G
Drawn:	Luka Božičević								#Y
Approved:	Grga Kolić		Object:	RDF Albioma Les Bois Rouge Reunion - France	Content: Terminal diagram =4LKD001AR+4LKD001AR-XA 035 03	Drawing designation: BRC-4-ATEP0-1874-G			=4LKD001AR
Format:	A3								+4LKD001AR

Sheet: 606

Next: 607

Terminal diagram

Strip

=4LKD001AR+4LKD001AR-XA 038 05

A SIDE						B SIDE
Placement	Target designation	Cable name and type	Conductor	Jumper	Wiring	Target designation
				1	BN 2.5 mm²	-IG 038 05:2
				2	BN 1.5 mm²	-Q 038 11:1
				3	BN 1.5 mm²	-Q 038 15:1
				4	BN 1.5 mm²	-Q 039 04:1
				5		
				6	BU 2.5 mm²	-IG 038 05:4
				7	BU 1.5 mm²	-Q 038 11:3
				8	BU 1.5 mm²	-Q 038 15:3
				9	BU 1.5 mm²	-Q 039 04:3
				10		
				11	BN 1.5 mm²	-Q 039 04:2
				12	BU 1.5 mm²	-Q 039 04:4

Date:	17.03.2026.	SINTAKSA A Voith Company	Client: ANDRITZ TEP d.o.o. Ulica 108. brigade ZNG 84, 35000 Slavonski Brod, Croatia	Scope: BOILER/LOW VOLTAGE CABINET BOILER (NORMAL) 1	Project: BRC-4	Unit & Issuer: ATEP0	Number: 1874	Revision: G
Drawn:	Luka Božičević							#Y
Approved:	Grga Kolić		Object: RDF Albioma Les Bois Rouge Reunion - France	Content: Terminal diagram =4LKD001AR+4LKD001AR-XA 038 05	Drawing designation: BRC-4-ATEP0-1874-G			=4LKD001AR
Format:	A3							+4LKD001AR

Sheet: 607

Next: 608

Terminal diagram

Strip

=4LKD001AR+4LKD001AR-XB 036 03

A SIDE							B SIDE
Placement	Target designation	Cable name and type	Conductor	Jumper		Wiring	Target designation
				'	1	WH 2.5 mm²	-IG 036 03:2
				'	2	GY 2.5 mm²	-IG 036 03:4

Date:	17.03.2026.	SINTAKSA A Voith Company	Client:	ANDRITZ TEP d.o.o. Ulica 108. brigade ZNG 84, 35000 Slavonski Brod, Croatia	Scope: BOILER/LOW VOLTAGE CABINET BOILER (NORMAL) 1	Project: BRC-4	Unit & Issuer: ATEP0	Number: 1874	Revision: G
Drawn:	Luka Božičević								#Y
Approved:	Grga Kolić		Object:	RDF Albioma Les Bois Rouge Reunion - France	Content: Terminal diagram =4LKD001AR+4LKD001AR-XB 036 03	Drawing designation: BRC-4-ATEP0-1874-G			=4LKD001AR
Format:	A3								+4LKD001AR

Sheet: 608

Next: 609

Terminal diagram

Strip

=4LKD001AR+4LKD001AR-XB 037 03

A SIDE						B SIDE
Placement	Target designation	Cable name and type	Conductor	Jumper	Wiring	Target designation
				' 1	WH 2.5 mm²	-IG 037 03:2
				' 2	GY 2.5 mm²	-IG 037 03:4

Date:	17.03.2026.	SINTAKSA A Voith Company	Client:	ANDRITZ TEP d.o.o. Ulica 108. brigade ZNG 84, 35000 Slavonski Brod, Croatia	Scope: BOILER/LOW VOLTAGE CABINET BOILER (NORMAL) 1	Project: BRC-4	Unit & Issuer: ATEP0	Number: 1874	Revision: G
Drawn:	Luka Božičević								#Y
Approved:	Grga Kolić		Object:	RDF Albioma Les Bois Rouge Reunion - France	Content: Terminal diagram =4LKD001AR+4LKD001AR-XB 037 03	Drawing designation: BRC-4-ATEP0-1874-G			=4LKD001AR
Format:	A3								+4LKD001AR

Sheet: 609

Next: 610

Terminal diagram

Strip

=4LKD001AR+4LKD001AR-XB 041 05

A SIDE						B SIDE
Placement	Target designation	Cable name and type	Conductor	Jumper	Wiring	Target designation
				1	WH 2.5 mm²	-IG 041 05:2
				2	WH 1.5 mm²	-Q 041 11:1
				3		
				4	GY 2.5 mm²	-IG 041 05:4
				5	GY 1.5 mm²	-Q 041 11:3
				6		
				7	WH 1.5 mm²	-Q 041 11:2
				8	GY 1.5 mm²	-Q 041 11:4

Date:	17.03.2026.	SINTAKSA A Voith Company	Client:	ANDRITZ TEP d.o.o. Ulica 108. brigade ZNG 84, 35000 Slavonski Brod, Croatia	Scope: BOILER/LOW VOLTAGE CABINET BOILER (NORMAL) 1	Project: BRC-4	Unit & Issuer: ATEP0	Number: 1874	Revision: G
Drawn:	Luka Božičević								#Y
Approved:	Grga Kolić		Object:	RDF Albioma Les Bois Rouge Reunion - France	Content: Terminal diagram =4LKD001AR+4LKD001AR-XB 041 05	Drawing designation: BRC-4-ATEP0-1874-G			=4LKD001AR
Format:	A3								+4LKD001AR

Sheet: 610

Next: 611

Terminal diagram

Strip

=4LKD001AR+4LKD001AR-XB 042 05

A SIDE						B SIDE
Placement	Target designation	Cable name and type	Conductor	Jumper	Wiring	Target designation
				1	WH 2.5 mm²	-IG 042 05:2
				2	WH 1.5 mm²	-Q 042 11:1
				3		
				4	GY 2.5 mm²	-IG 042 05:4
				5	GY 1.5 mm²	-Q 042 11:3
				6		
				7	WH 1.5 mm²	-Q 042 11:2
				8	GY 1.5 mm²	-Q 042 11:4

Date:	17.03.2026.	SINTAKSA A Voith Company	Client:	ANDRITZ TEP d.o.o. Ulica 108. brigade ZNG 84, 35000 Slavonski Brod, Croatia	Scope: BOILER/LOW VOLTAGE CABINET BOILER (NORMAL) 1	Project: BRC-4	Unit & Issuer: ATEP0	Number: 1874	Revision: G
Drawn:	Luka Božičević								#Y
Approved:	Grga Kolić		Object:	RDF Albioma Les Bois Rouge Reunion - France	Content: Terminal diagram =4LKD001AR+4LKD001AR-XB 042 05	Drawing designation: BRC-4-ATEP0-1874-G			=4LKD001AR
Format:	A3								+4LKD001AR

Sheet: 611

Next: 612

Terminal diagram

Strip

=4LKD001AR+4LKD001AR-XS 051 03

A SIDE						B SIDE
Placement	Target designation	Cable name and type	Conductor	Jumper	Wiring	Target designation
				1		
				2	RD 1 mm²	-IG 031 05:11
				3		
				4	RD 1 mm²	-IG 031 05:14
				5	RD 1 mm²	-K 031 14:14
				6	RD 1 mm²	-K 042 04:22
				7	RD 1 mm²	-Q 032 05:14
				8	RD 1 mm²	-Q 033 05:14
				9	RD 1 mm²	-K 038 02:24
				10	RD 1 mm²	-K 040 02:24
				11	RD 1 mm²	-K 041 02:24
				12	RD 1 mm²	-K 042 02:24
				13		
				14		
				15		
				16		

Date:	17.03.2026.	SINTAKSA A Voith Company	Client:	ANDRITZ TEP d.o.o. Ulica 108. brigade ZNG 84, 35000 Slavonski Brod, Croatia	Scope: BOILER/LOW VOLTAGE CABINET BOILER (NORMAL) 1	Project: BRC-4	Unit & Issuer: ATEP0	Number: 1874	Revision: G
Drawn:	Luka Božičević								#Y
Approved:	Grga Kolić		Object:	RDF Albioma Les Bois Rouge Reunion - France	Content: Terminal diagram =4LKD001AR+4LKD001AR-XS 051 03	Drawing designation: BRC-4-ATEP0-1874-G			=4LKD001AR
Format:	A3								+4LKD001AR

Sheet: 612

Next: 613

Terminal diagram

Strip

=4LKD001AR+4LKD001AR-XS 055 03

A SIDE					B SIDE
Placement	Target designation	Cable name and type	Conductor	Jumper / Strip	Wiring	Target designation
				1	GNYE 2.5 mm²	-PE
/55.6	=4FES005MO+4FES005MO-X?:?:A	4LKD001AR/ 4FES005MO-C-01 U1000R2V 5G1.5 mm²	BU 1.5 mm²	2		
				3		
				4		
				5		
				6		
				7		
				8		
				9		
				10		
				11		
				12		
				13		
				14		
				15		
				16		
				17		
				18		
				19		
				20		
				21		
				22		
				23		
				24		
				25		

Date:	17.03.2026.	SINTAKSA A Voith Company	Client:	ANDRITZ TEP d.o.o. Ulica 108. brigade ZNG 84, 35000 Slavonski Brod, Croatia	Scope: BOILER/LOW VOLTAGE CABINET BOILER (NORMAL) 1	Project: BRC-4	Unit & Issuer: ATEP0	Number: 1874	Revision: G
Drawn:	Luka Božičević								#Y
Approved:	Grga Kolić		Object:	RDF Albioma Les Bois Rouge Reunion - France	Content: Terminal diagram =4LKD001AR+4LKD001AR-XS 055 03	Drawing designation: BRC-4-ATEP0-1874-G		=4LKD001AR	Sheet: 613
Format:	A3							+4LKD001AR	Next: 614

Terminal diagram

Strip

=4LKD001AR+4LKD001AR-XS 055 03

A SIDE						B SIDE
Placement	Target designation	Cable name and type	Conductor	Jumper	Wiring	Target designation
				26		
				27		
				28		
				29		
				30		

Date:	17.03.2026.	SINTAKSA A Voith Company	Client:	ANDRITZ TEP d.o.o. Ulica 108. brigade ZNG 84, 35000 Slavonski Brod, Croatia	Scope: BOILER/LOW VOLTAGE CABINET BOILER (NORMAL) 1	Project: BRC-4	Unit & Issuer: ATEP0	Number: 1874	Revision: G
Drawn:	Luka Božičević								#Y
Approved:	Grga Kolić		Object:	RDF Albioma Les Bois Rouge Reunion - France	Content: Terminal diagram =4LKD001AR+4LKD001AR-XS 055 03	Drawing designation: BRC-4-ATEP0-1874-G			=4LKD001AR
Format:	A3								+4LKD001AR

Sheet: 614

Next: +4LKD002AR/1

SINTAKSA
A Voith Company

Ulica Domovinskog rata 104C,
21 000 Split, Hrvatska / Croatia
OIB: 32357958120
T: +385 1 2310 273
www.sintaksa.hr

SCHÉMA DE CÂBLAGE ÉLECTRIQUE

Projet / tâche:

RDF Albioma Les Bois Rouge
Reunion - France

Cadre:

BOILER/LOW VOLTAGE
CABINET BOILER (NORMAL)
2
+4LKD002AR

Client / acheteur:

ANDRITZ TEP d.o.o.
Ulica 108. brigade ZNG 84, 35000
Slavonski Brod, Croatia

Code du document:

BRC-4-ATEP0-1874-G

Date:
17.03.2026.

Table of contents

Page number	Page description	Remarks of creator	Date	Checked by	Revision
2	TABLE OF CONTENTS		2026/06/17		
3	TABLE OF CONTENTS		2026/06/17		
80	400VAC DISTRIBUTION		2026/05/26		G
81	22kW SPARE		2026/06/06		G
82	SPARE - CONTROL		2026/05/27		G
83	SPARE - SIGNALIZATION		2026/06/06		G
84	MAIN CLOSED CHAIN CONVEYOR		2026/06/06		G
85	MAIN CLOSED CHAIN CONVEYOR - CONTROL		2026/06/06		G
86	MAIN CLOSED CHAIN CONVEYOR - CONTROL		2026/05/24		G
87	MAIN CLOSED CHAIN CONVEYOR - SIGNALIZATION		2026/06/08		G
88	MAIN CLOSED CHAIN CONVEYOR - SIGNALIZATION		2026/06/06		G
89	SCREW CONVEYOR BELOW ECO		2026/06/06		G
90	SCREW CONVEYOR BELOW ECO - CONTROL		2026/06/06		G
91	SCREW CONVEYOR BELOW ECO - CONTROL		2026/05/24		G
92	SCREW CONVEYOR BELOW ECO - SIGNALISATION		2026/06/08		G
93	SCREW CONVEYOR BELOW ECO - SIGNALISATION		2026/06/06		G
94	BURNER SYSTEM & OVERBAND MAGNETIC SEPARATOR & COOLING OIL PUMP AND FAN MOTOR		2026/05/24		G
95	PNEUMATIC RAPPING SYSTEM & WATER SPRAYING SYSTEM		2026/05/24		G
96	LAMP TEST		2026/05/28		G
111	EMERGENCY SHUTDOWN - GROUND FLOOR MIDDLE		2026/06/06		G
112	EMERGENCY SHUTDOWN - SECOND FLOOR MIDDLE		2026/06/16		G
113	EMERGENCY SHUTDOWN - SECOND FLOOR MIDDLE		2026/06/16		G
114	EMERGENCY SHUTDOWN - THIRD FLOOR MIDDLE		2026/06/16		G
115	EMERGENCY SHUTDOWN - FOURTH FLOOR MIDDLE		2026/06/16		G
116	EMERGENCY SHUTDOWN - FIFTH FLOOR MIDDLE		2026/06/16		G
117	EMERGENCY SHUTDOWN - GROUND FLOOR TURBINE SIDE		2026/06/16		G
121	SIGNALIZATION		2026/06/06		G
125	SPARE		2026/06/16		G
131	COMMUNICATION		2026/05/26		G
146	Terminal diagram =4LKD001AR+4LKD002AR-X 081 05		2026/05/28		F
147	Terminal diagram =4LKD001AR+4LKD002AR-X 082 08		2026/05/28		F
148	Terminal diagram =4LKD001AR+4LKD002AR-X 083 06		2026/05/28		F
149	Terminal diagram =4LKD001AR+4LKD002AR-X 083 10		2026/05/24		F

Table of contents

Page number	Page description	Remarks of creator	Date	Checked by	Revision
150	Terminal diagram =4LKD001AR+4LKD002AR-X 084 05		2026/05/28		F
151	Terminal diagram =4LKD001AR+4LKD002AR-X 085 09		2026/05/28		F
152	Terminal diagram =4LKD001AR+4LKD002AR-X 087 06		2026/05/28		F
153	Terminal diagram =4LKD001AR+4LKD002AR-X 089 05		2026/05/28		F
154	Terminal diagram =4LKD001AR+4LKD002AR-X 090 09		2026/05/28		F
155	Terminal diagram =4LKD001AR+4LKD002AR-X 092 06		2026/05/28		F
156	Terminal diagram =4LKD001AR+4LKD002AR-X 094 04		2026/05/28		F
157	Terminal diagram =4LKD001AR+4LKD002AR-X 094 09		2026/05/28		F
158	Terminal diagram =4LKD001AR+4LKD002AR-X 094 13		2026/05/28		F
159	Terminal diagram =4LKD001AR+4LKD002AR-X 095 04		2026/05/28		F
160	Terminal diagram =4LKD001AR+4LKD002AR-X 095 09		2026/05/28		F
161	Terminal diagram =4LKD001AR+4LKD002AR-X 111 04		2026/05/24		F
162	Terminal diagram =4LKD001AR+4LKD002AR-X 112 04		2026/05/24		F
163	Terminal diagram =4LKD001AR+4LKD002AR-XB 096 03		2026/05/28		F
164	Terminal diagram =4LKD001AR+4LKD002AR-XS 121 03		2026/05/28		F
165	Terminal diagram =4LKD001AR+4LKD002AR-XS 125 02		2026/05/28		F
166	Terminal diagram =4LKD001AR+4LKD002AR-XS 125 02		2026/05/28		F
401	SUMMARIZED PARTS LIST		2026/05/28		
402	SUMMARIZED PARTS LIST		2026/05/28		
403	SUMMARIZED PARTS LIST		2026/06/08		

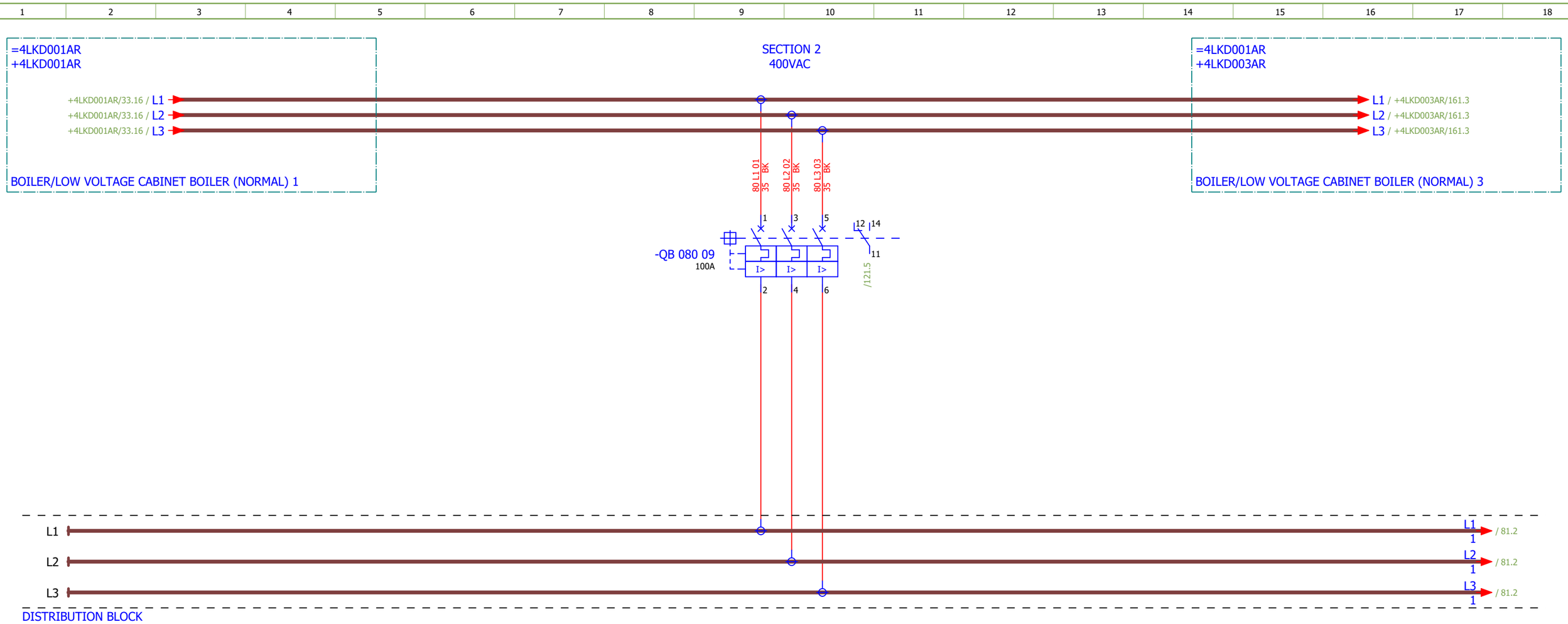

NOTE:
Conducteur de phase L1 avec manchon noir
Conducteur de phase L2 avec manchon marron
Conducteur de phase L3 avec manchon rouge

Date:	17.03.2026.	SINTAKSA A Voith Company	Client:	ANDRITZ TEP d.o.o. Ulica 108. brigade ZNG 84, 35000 Slavonski Brod, Croatia	Scope: BOILER/LOW VOLTAGE CABINET BOILER (NORMAL) 2	Project: BRC-4	Unit & Issuer: ATEP0	Number: 1874	Revision: G
Drawn:	Luka Božičević								#D
Approved:	Grga Kolić		Object:	RDF Albioma Les Bois Rouge Reunion - France	Content: 400VAC DISTRIBUTION	Drawing designation: BRC-4-ATEP0-1874-G		=4LKD001AR	Sheet: 80
Format:	A3							+4LKD002AR	Next: 81

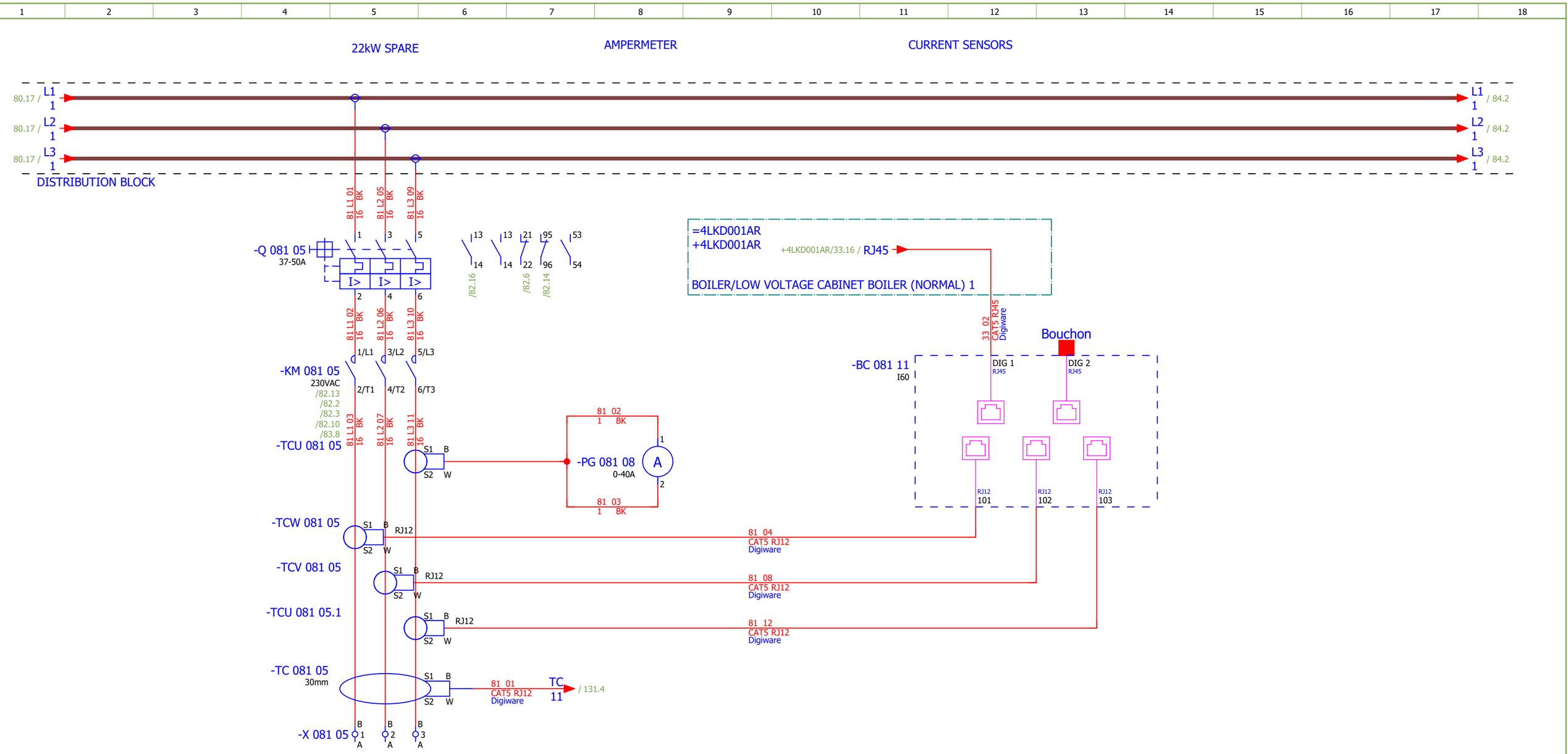

NOTE:
Conducteur de phase L1 avec manchon noir
Conducteur de phase L2 avec manchon marron
Conducteur de phase L3 avec manchon rouge

Date:	17.03.2026.	SINTAKSA A Voith Company	Client:	ANDRITZ TEP d.o.o. Ulica 108. brigade ZNG 84, 35000 Slavonski Brod, Croatia	Scope: BOILER/LOW VOLTAGE CABINET BOILER (NORMAL) 2	Project: BRC-4	Unit & Issuer: ATEP0	Number: 1874	Revision: G
Drawn:	Luka Božičević								#D
Approved:	Grga Kolić		Object:	RDF Albioma Les Bois Rouge Reunion - France	Content: 22kW SPARE	Drawing designation: BRC-4-ATEP0-1874-G		=4LKD001AR	Sheet: 81
Format:	A3							+4LKD002AR	Next: 82

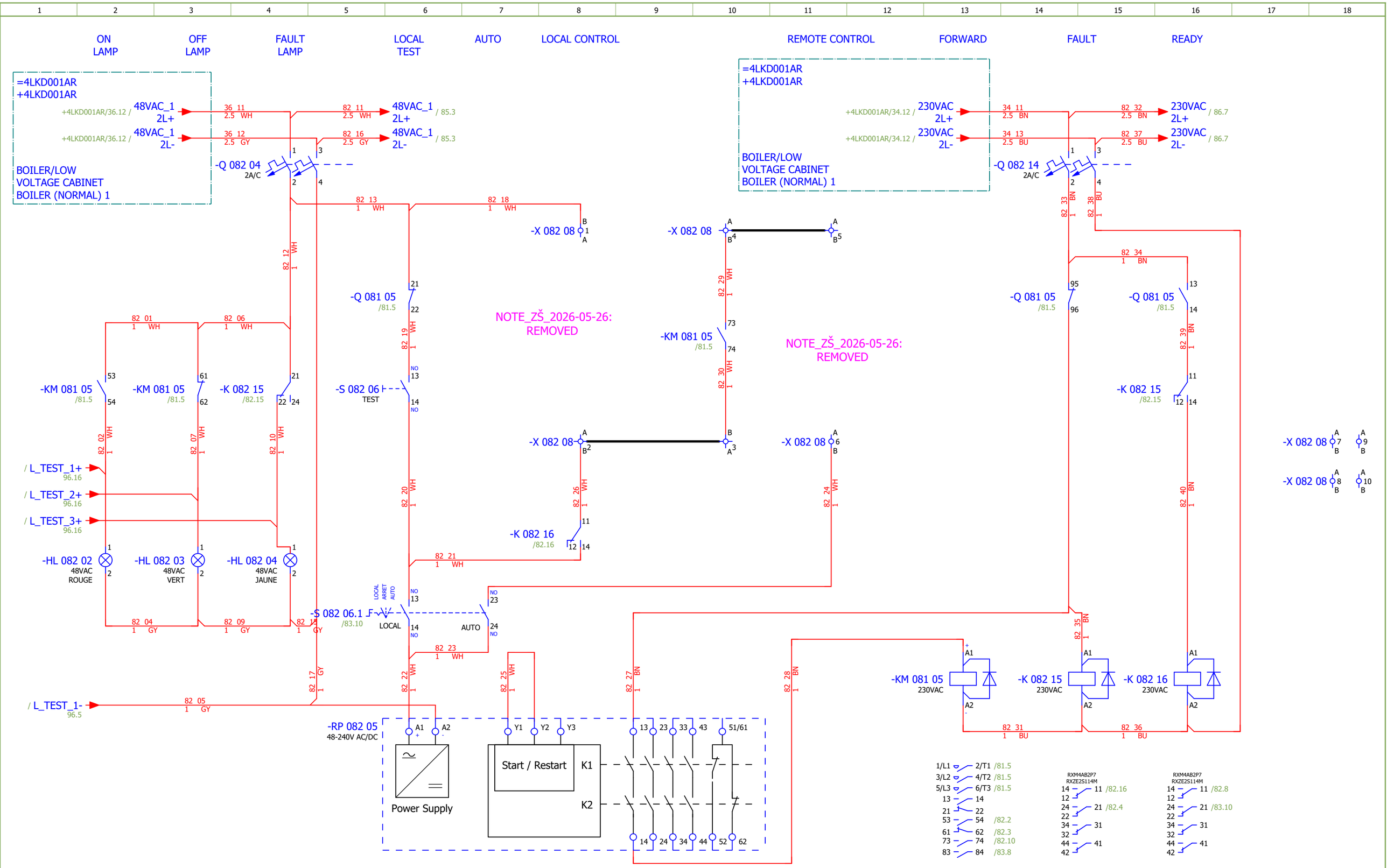

Date:	17.03.2026.	SINTAKSA A Voith Company	Client:	ANDRITZ TEP d.o.o. Ulica 108. brigade ZNG 84, 35000 Slavonski Brod, Croatia	Scope:	BOILER/LOW VOLTAGE CABINET BOILER (NORMAL) 2	Project: BRC-4	Unit & Issuer: ATEP0	Number: 1874	Revision: G	#D
Drawn:	Luka Božičević										
Approved:	Grga Kolić		Object:	RDF Albioma Les Bois Rouge Reunion - France	Content:	SPARE - CONTROL	Drawing designation: BRC-4-ATEP0-1874-G			=4LKD001AR	Sheet: 82
Format:	A3									+4LKD002AR	Next: 83

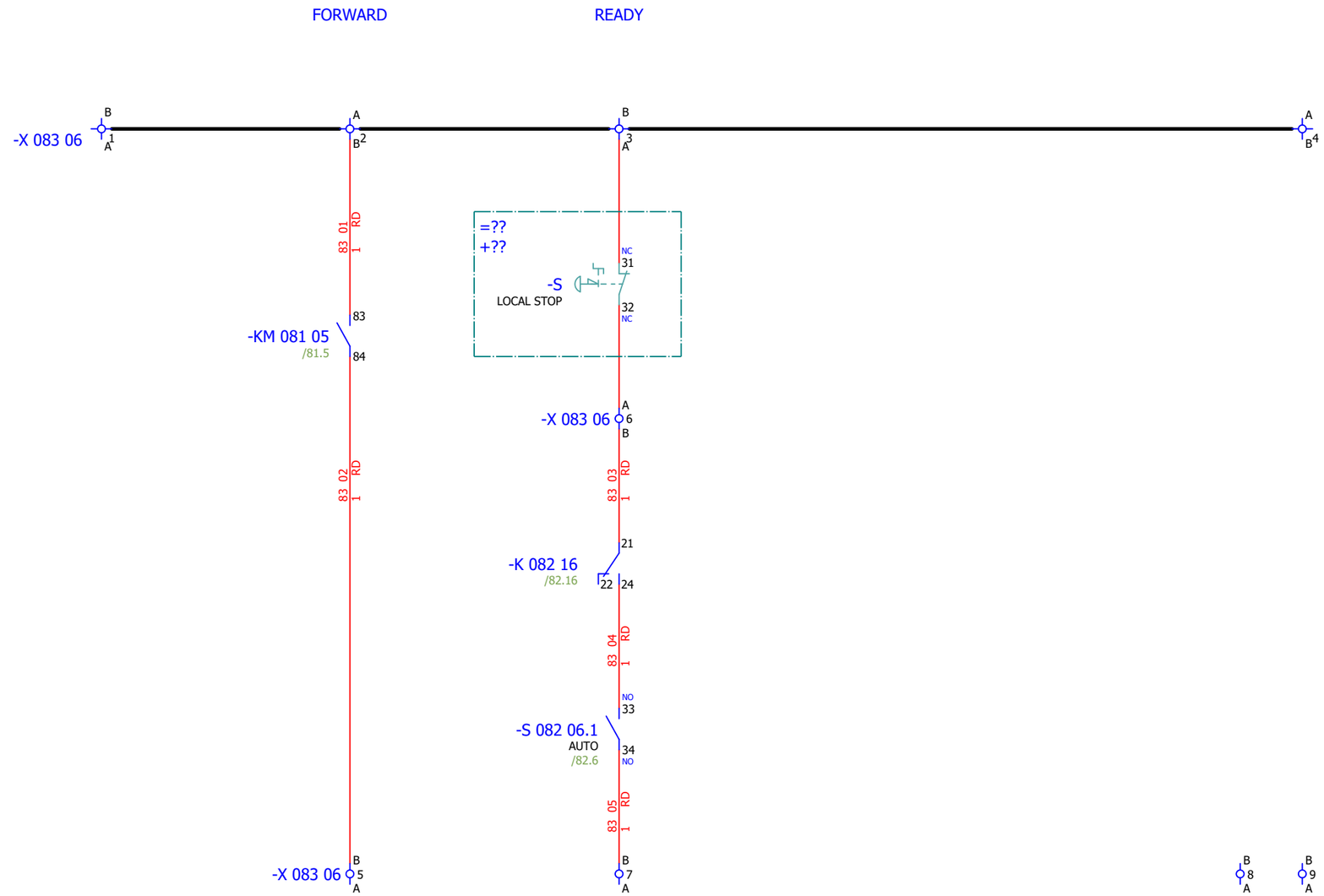

Date:	17.03.2026.	SINTAKSA A Voith Company	Client:	ANDRITZ TEP d.o.o. Ulica 108. brigade ZNG 84, 35000 Slavonski Brod, Croatia	Scope: BOILER/LOW VOLTAGE CABINET BOILER (NORMAL) 2	Project: BRC-4	Unit & Issuer: ATEP0	Number: 1874	Revision: G
Drawn:	Luka Božičević								#D
Approved:	Grga Kolić		Object:	RDF Albioma Les Bois Rouge Reunion - France	Content: SPARE - SIGNALIZATION	Drawing designation: BRC-4-ATEP0-1874-G			=4LKD001AR
Format:	A3								+4LKD002AR

Sheet: 83
Next: 84

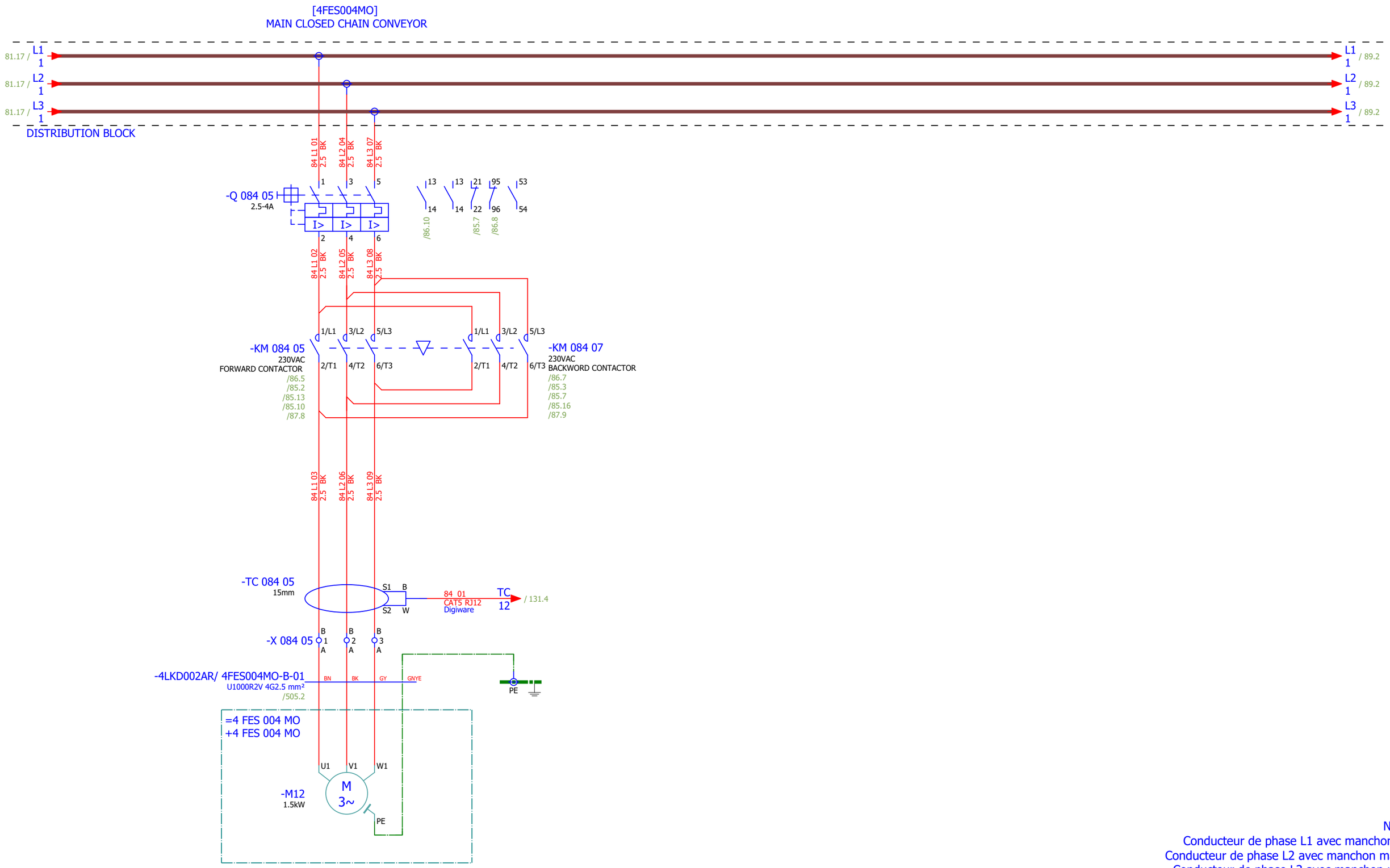

NOTE:
Conducteur de phase L1 avec manchon noir
Conducteur de phase L2 avec manchon marron
Conducteur de phase L3 avec manchon rouge

Date:	17.03.2026.	SINTAKSA A Voith Company	Client:	ANDRITZ TEP d.o.o. Ulica 108. brigade ZNG 84, 35000 Slavonski Brod, Croatia	Scope: BOILER/LOW VOLTAGE CABINET BOILER (NORMAL) 2	Project: BRC-4	Unit & Issuer: ATEP0	Number: 1874	Revision: G
Drawn:	Luka Božičević								#D
Approved:	Grga Kolić		Object:	RDF Albioma Les Bois Rouge Reunion - France	Content: MAIN CLOSED CHAIN CONVEYOR	Drawing designation: BRC-4-ATEP0-1874-G		=4LKD001AR	Sheet: 84
Format:	A3							+4LKD002AR	Next: 85

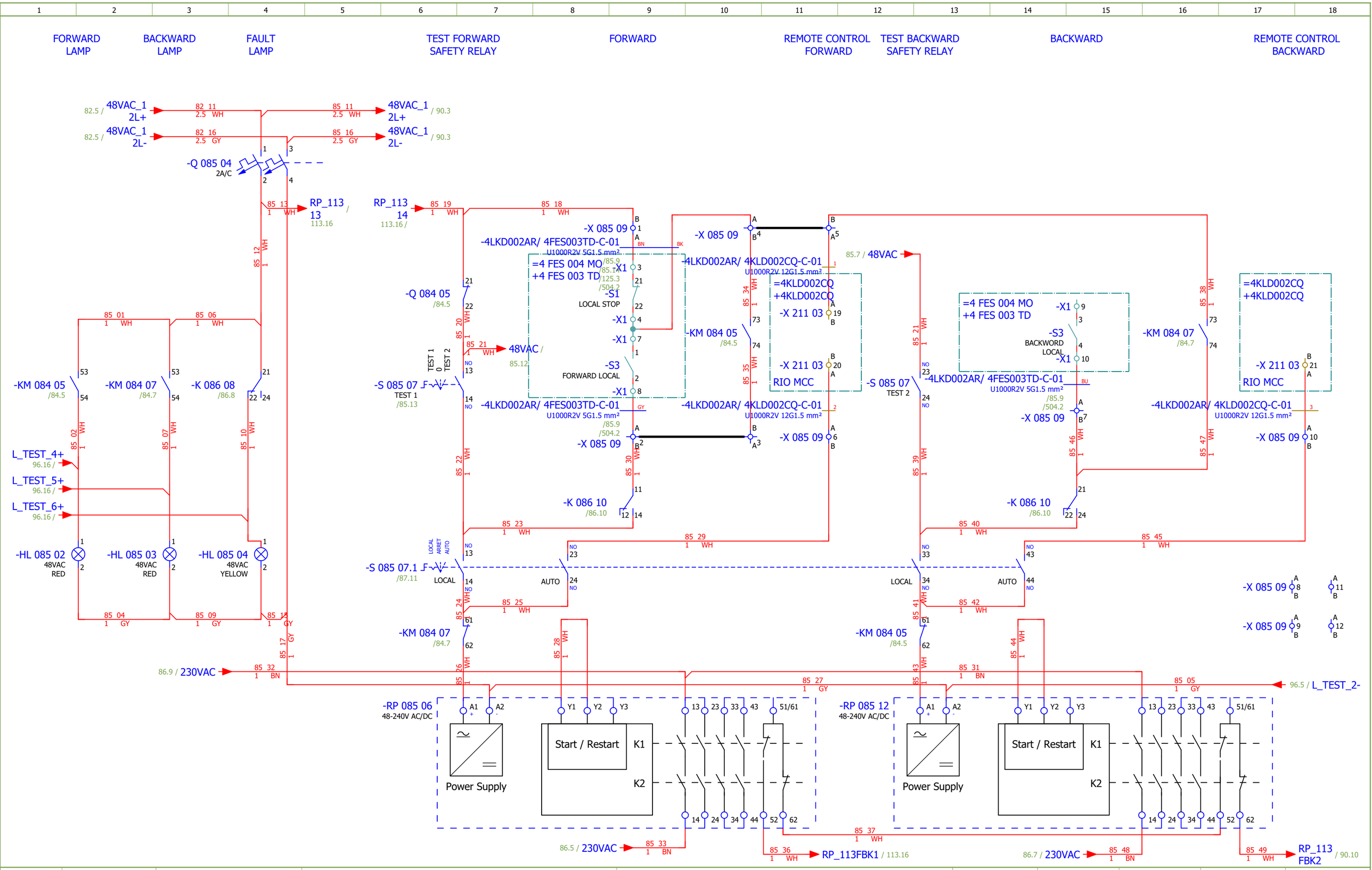

Date:	17.03.2026.	SINTAKSA A Voith Company	Client:	ANDRITZ TEP d.o.o. Ulica 108. brigade ZNG 84, 35000 Slavonski Brod, Croatia	Scope:	BOILER/LOW VOLTAGE CABINET BOILER (NORMAL) 2	Project: BRC-4	Unit & Issuer: ATEP0	Number: 1874	Revision: G
Drawn:	Luka Božičević									#D
Approved:	Grga Kolić		Object:	RDF Albioma Les Bois Rouge Reunion - France	Content:	MAIN CLOSED CHAIN CONVEYOR - CONTROL	Drawing designation: BRC-4-ATEP0-1874-G		=4LKD001AR	Sheet: 85
Format:	A3								+4LKD002AR	Next: 86

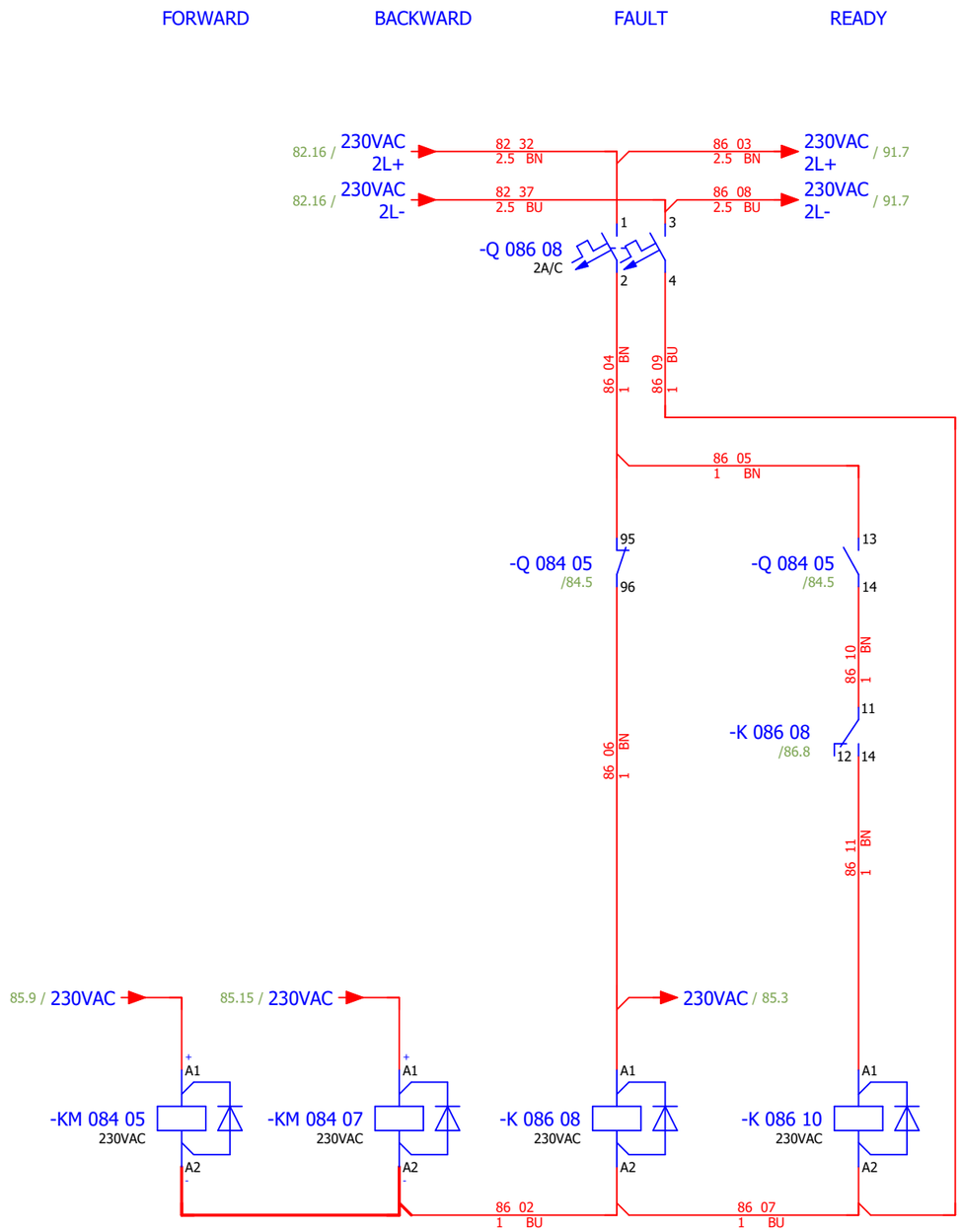

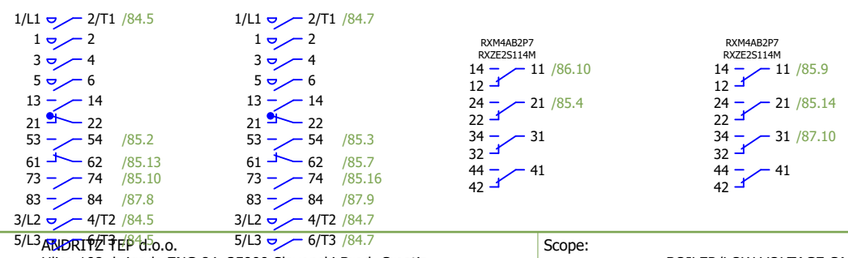

Date:	17.03.2026.	SINTAKSA A Voith Company	Client: ADDRITZ TEP d.o.o. Ulica 108. brigade ZNG 84, 35000 Slavonski Brod, Croatia	Scope: BOILER/LOW VOLTAGE CABINET BOILER (NORMAL) 2	Project: BRC-4	Unit & Issuer: ATEP0	Number: 1874	Revision: G
Drawn:	Luka Božičević							#D
Approved:	Grga Kolić		Object: RDF Albioma Les Bois Rouge Reunion - France	Content: MAIN CLOSED CHAIN CONVEYOR - CONTROL	Drawing designation: BRC-4-ATEP0-1874-G		=4LKD001AR	Sheet: 86
Format:	A3						+4LKD002AR	Next: 87

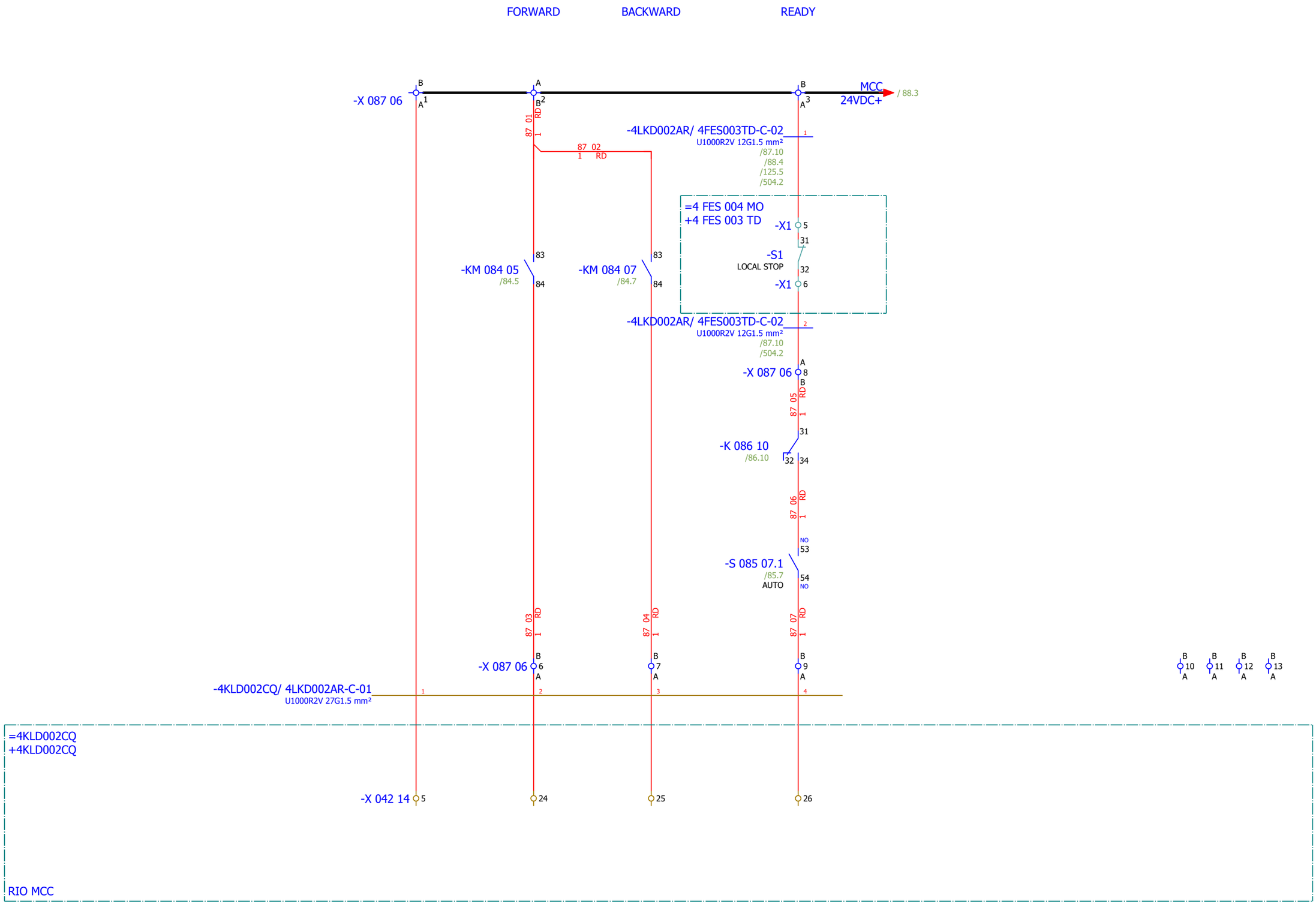

Date:	17.03.2026.	SINTAKSA A Voith Company	Client:	ANDRITZ TEP d.o.o. Ulica 108. brigade ZNG 84, 35000 Slavonski Brod, Croatia	Scope: BOILER/LOW VOLTAGE CABINET BOILER (NORMAL) 2	Project: BRC-4	Unit & Issuer: ATEP0	Number: 1874	Revision: G
Drawn:	Luka Božičević								#D
Approved:	Grga Kolić		Object:	RDF Albioma Les Bois Rouge Reunion - France	Content: MAIN CLOSED CHAIN CONVEYOR - SIGNALIZATION	Drawing designation: BRC-4-ATEP0-1874-G		=4LKD001AR	Sheet: 87
Format:	A3							+4LKD002AR	Next: 88

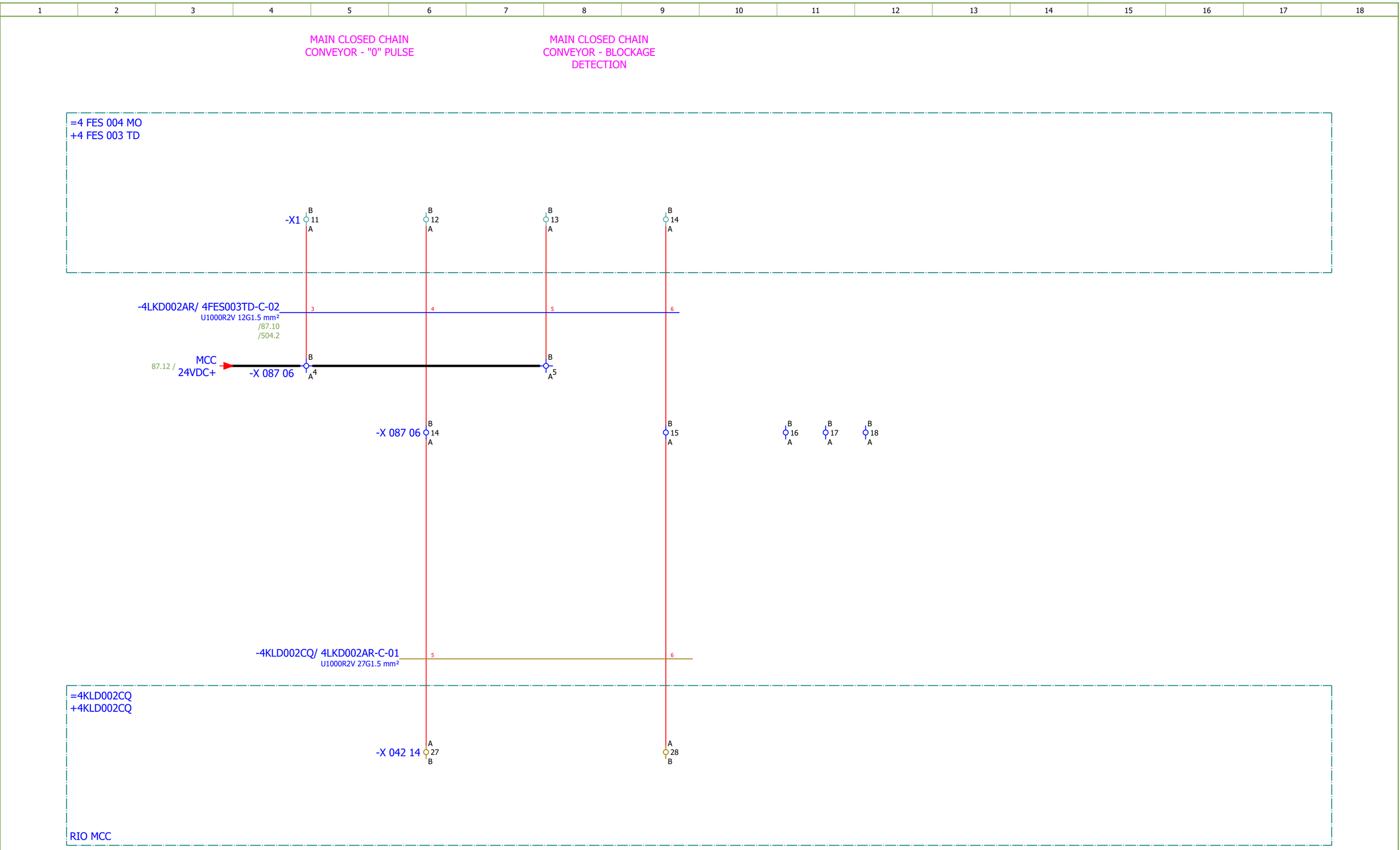

Date:	17.03.2026.	SINTAKSA A Voith Company	Client:	ANDRITZ TEP d.o.o. Ulica 108. brigade ZNG 84, 35000 Slavonski Brod, Croatia	Scope: BOILER/LOW VOLTAGE CABINET BOILER (NORMAL) 2	Project: BRC-4	Unit & Issuer: ATEP0	Number: 1874	Revision: G
Drawn:	Luka Božičević								#D
Approved:	Grga Kolić		Object:	RDF Albioma Les Bois Rouge Reunion - France	Content: MAIN CLOSED CHAIN CONVEYOR - SIGNALIZATION	Drawing designation: BRC-4-ATEP0-1874-G		=4LKD001AR	Sheet: 88
Format:	A3							+4LKD002AR	Next: 89

[4 FES 002 MO] SCREW CONVEYOR BELOW ECO

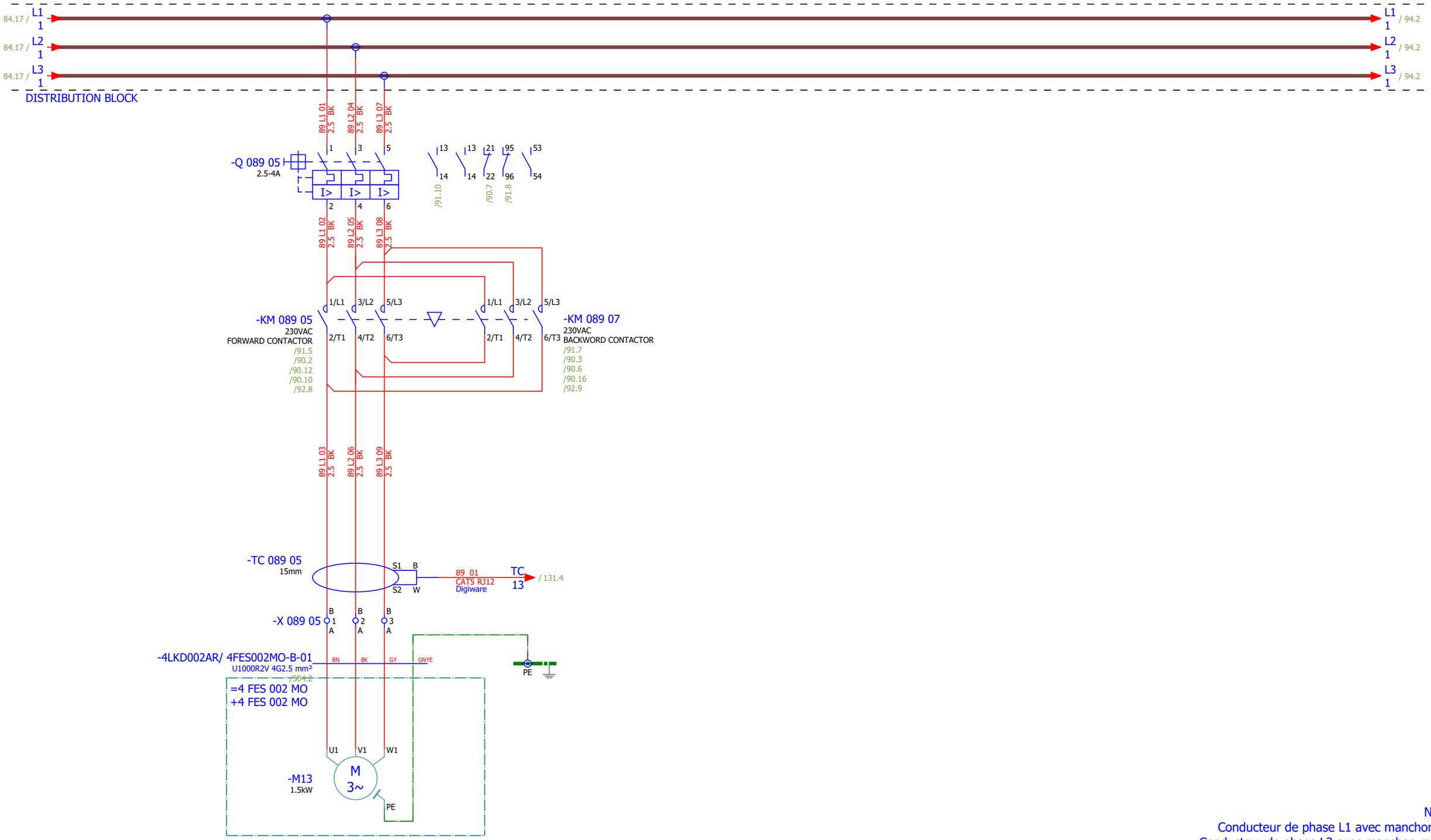

NOTE:
Conducteur de phase L1 avec manchon noir
Conducteur de phase L2 avec manchon marron
Conducteur de phase L3 avec manchon rouge

Date:	17.03.2026.	SINTAKSA A Voith Company	Client:	ANDRITZ TEP d.o.o. Ulica 108. brigade ZNG 84, 35000 Slavonski Brod, Croatia	Scope: BOILER/LOW VOLTAGE CABINET BOILER (NORMAL) 2	Project: BRC-4	Unit & Issuer: ATEP0	Number: 1874	Revision: G
Drawn:	Luka Božičević								#D
Approved:	Grga Kolić		Object:	RDF Albioma Les Bois Rouge Reunion - France	Content: SCREW CONVEYOR BELOW ECO	Drawing designation: BRC-4-ATEP0-1874-G		=4LKD001AR	Sheet: 89
Format:	A3							+4LKD002AR	Next: 90

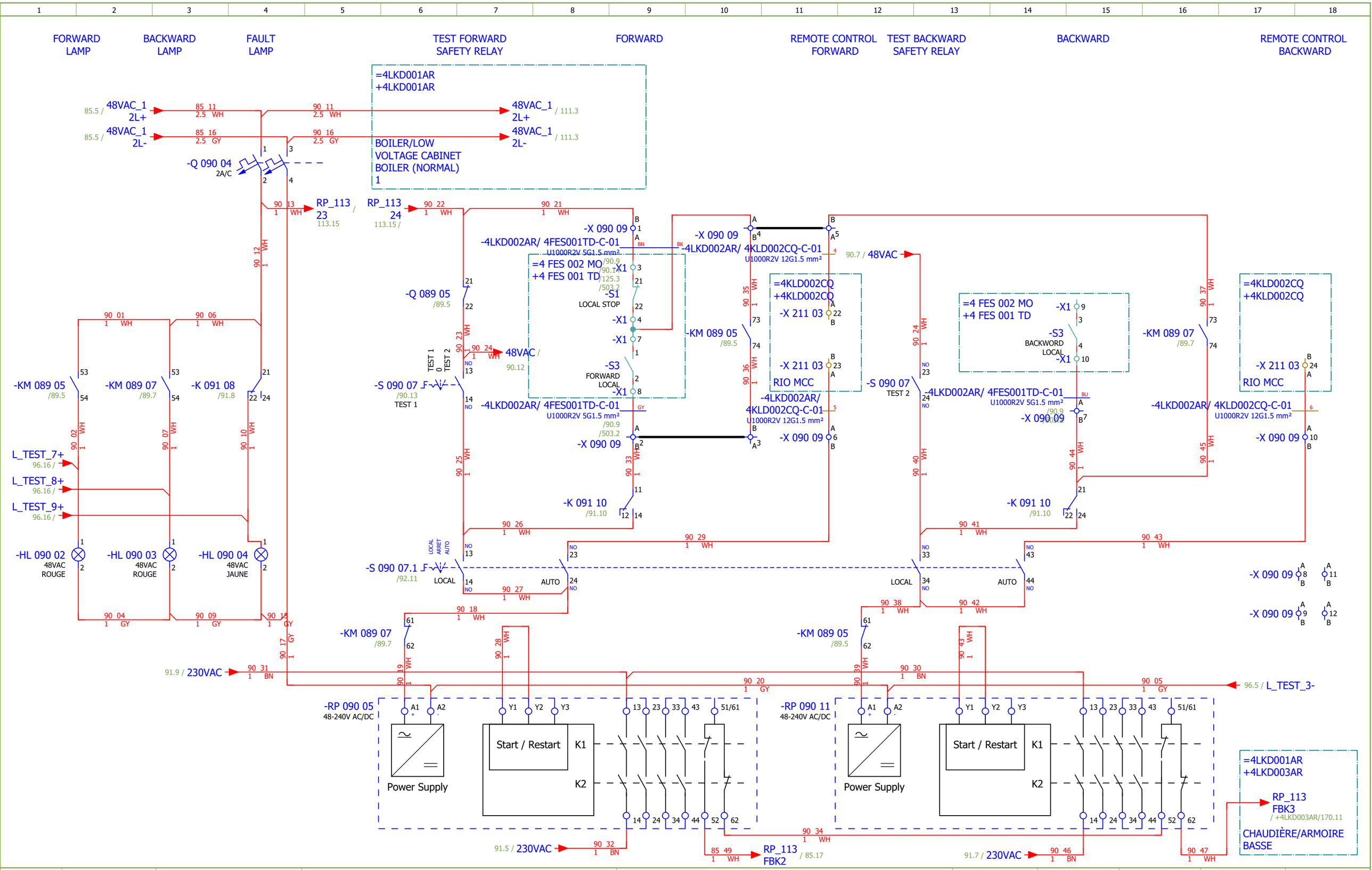

Date:	17.03.2026.	SINTAKSA A Voith Company	Client: ANDRITZ TEP d.o.o. Ulica 108. brigade ZNG 84, 35000 Slavonski Brod, Croatia	Scope: BOILER/LOW VOLTAGE CABINET BOILER (NORMAL) 2	Project: BRC-4	Unit & Issuer: ATEP0	Number: 1874	Revision: G	
Drawn:	Luka Božičević								#D
Approved:	Grga Kolić		Object: RDF Albioma Les Bois Rouge Reunion - France	Content: SCREW CONVEYOR BELOW ECO - CONTROL	Drawing designation: BRC-4-ATEP0-1874-G			=4LKD001AR	Sheet: 90
Format:	A3							+4LKD002AR	Next: 91

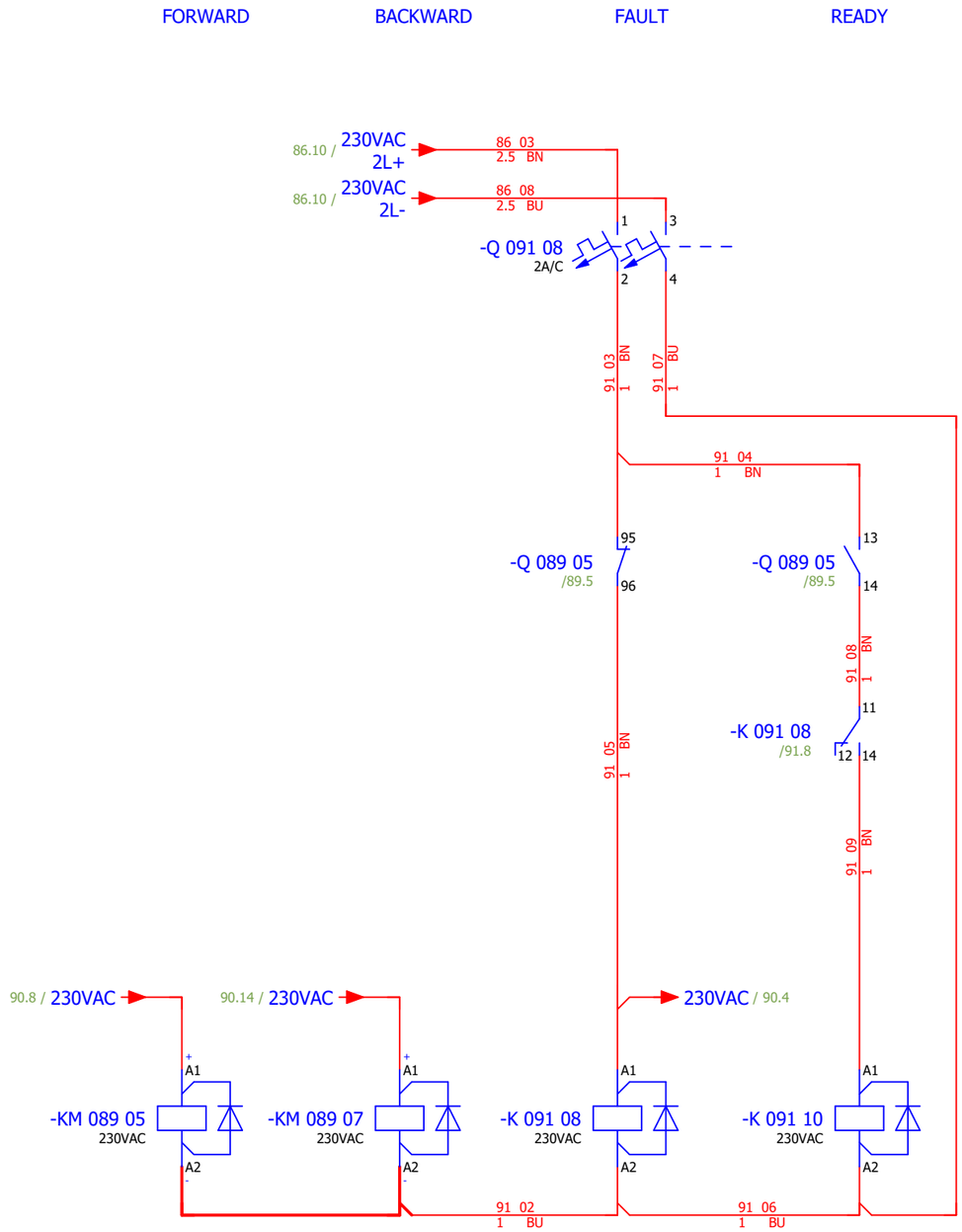

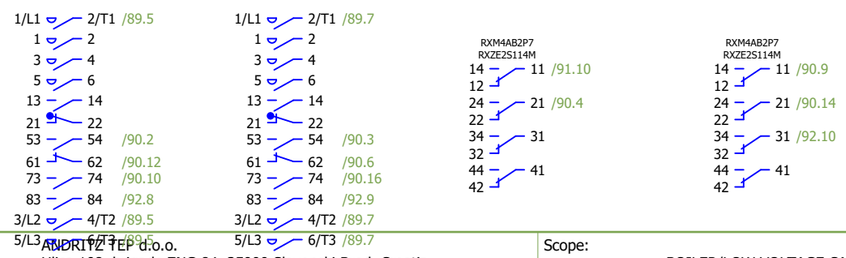

Date:	17.03.2026.	SINTAKSA A Voith Company	Client: ADDRITZ TEP d.o.o. Ulica 108. brigade ZNG 84, 35000 Slavonski Brod, Croatia	Scope: BOILER/LOW VOLTAGE CABINET BOILER (NORMAL) 2	Project: BRC-4	Unit & Issuer: ATEP0	Number: 1874	Revision: G
Drawn:	Luka Božičević							#D
Approved:	Grga Kolić		Object: RDF Albioma Les Bois Rouge Reunion - France	Content: SCREW CONVEYOR BELOW ECO - CONTROL	Drawing designation: BRC-4-ATEP0-1874-G		=4LKD001AR	Sheet: 91
Format:	A3						+4LKD002AR	Next: 92

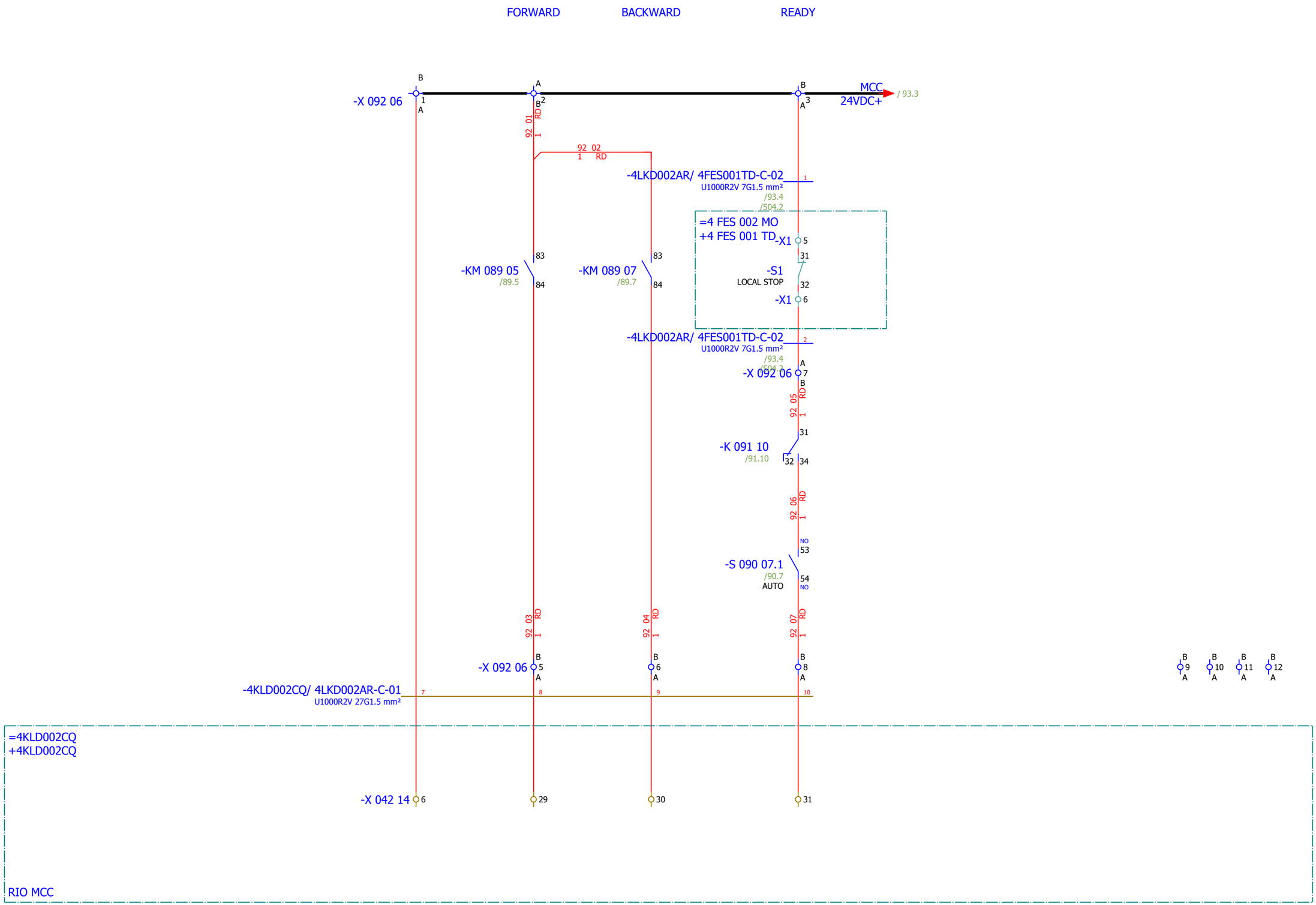

Date:	17.03.2026.	SINTAKSA A Voith Company	Client:	ANDRITZ TEP d.o.o. Ulica 108. brigade ZNG 84, 35000 Slavonski Brod, Croatia	Scope:	BOILER/LOW VOLTAGE CABINET BOILER (NORMAL) 2	Project: BRC-4	Unit & Issuer: ATEP0	Number: 1874	Revision: G
Drawn:	Luka Božičević									#D
Approved:	Grga Kolić		Object:	RDF Albioma Les Bois Rouge Reunion - France	Content:	SCREW CONVEYOR BELOW ECO - SIGNALISATION	Drawing designation: BRC-4-ATEP0-1874-G			=4LKD001AR
Format:	A3									+4LKD002AR

Sheet: 92
Next: 93

SCREW CONVEYOR BELOW
ECO - "0" PULSE

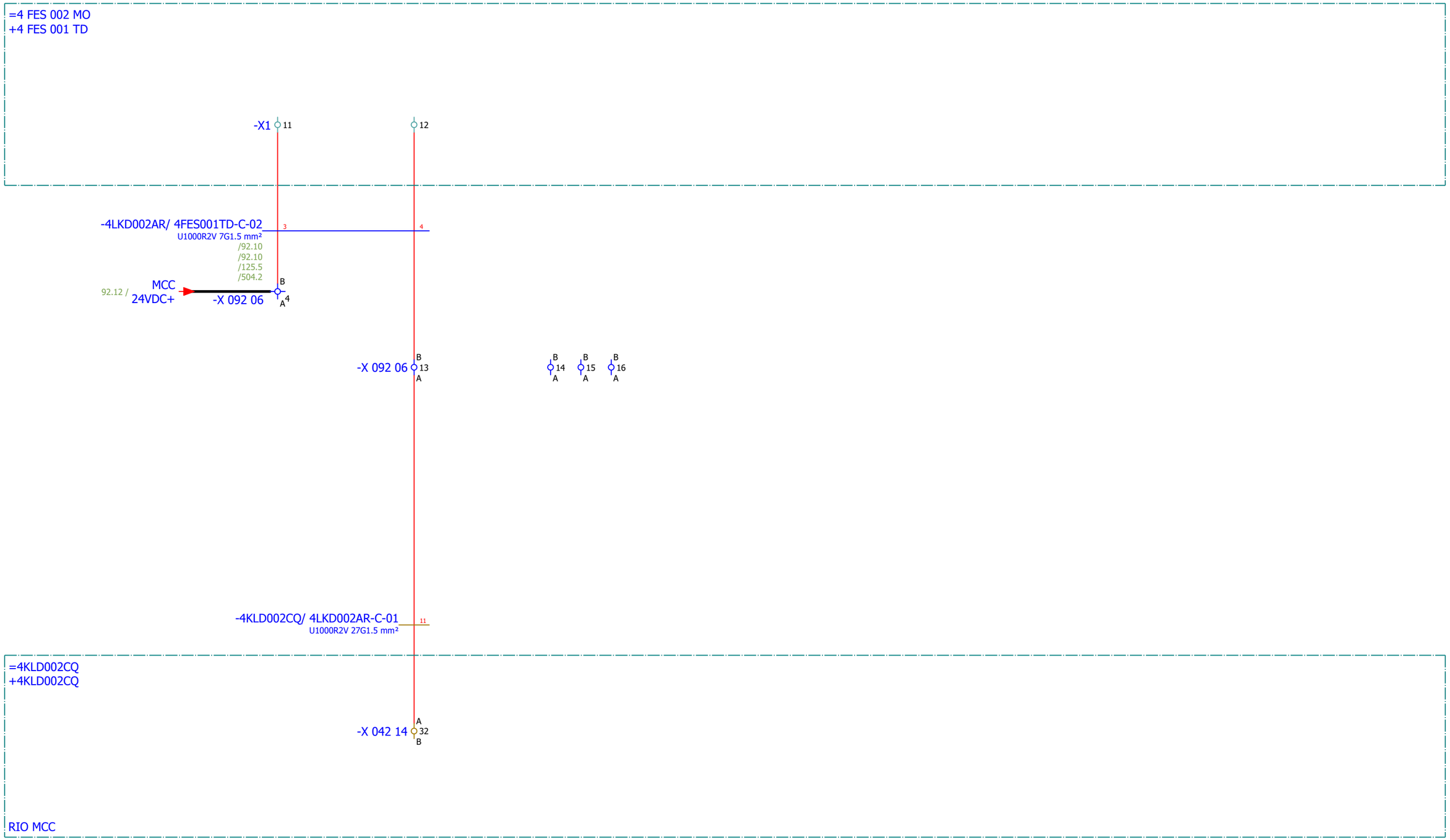

Date:	17.03.2026.	SINTAKSA A Voith Company	Client:	ANDRITZ TEP d.o.o. Ulica 108. brigade ZNG 84, 35000 Slavonski Brod, Croatia	Scope: BOILER/LOW VOLTAGE CABINET BOILER (NORMAL) 2	Project: BRC-4	Unit & Issuer: ATEP0	Number: 1874	Revision: G
Drawn:	Luka Božičević								#D
Approved:	Grga Kolić		Object:	RDF Albioma Les Bois Rouge Reunion - France	Content: SCREW CONVEYOR BELOW ECO - SIGNALISATION	Drawing designation: BRC-4-ATEP0-1874-G		=4LKD001AR	Sheet: 93
Format:	A3							+4LKD002AR	Next: 94

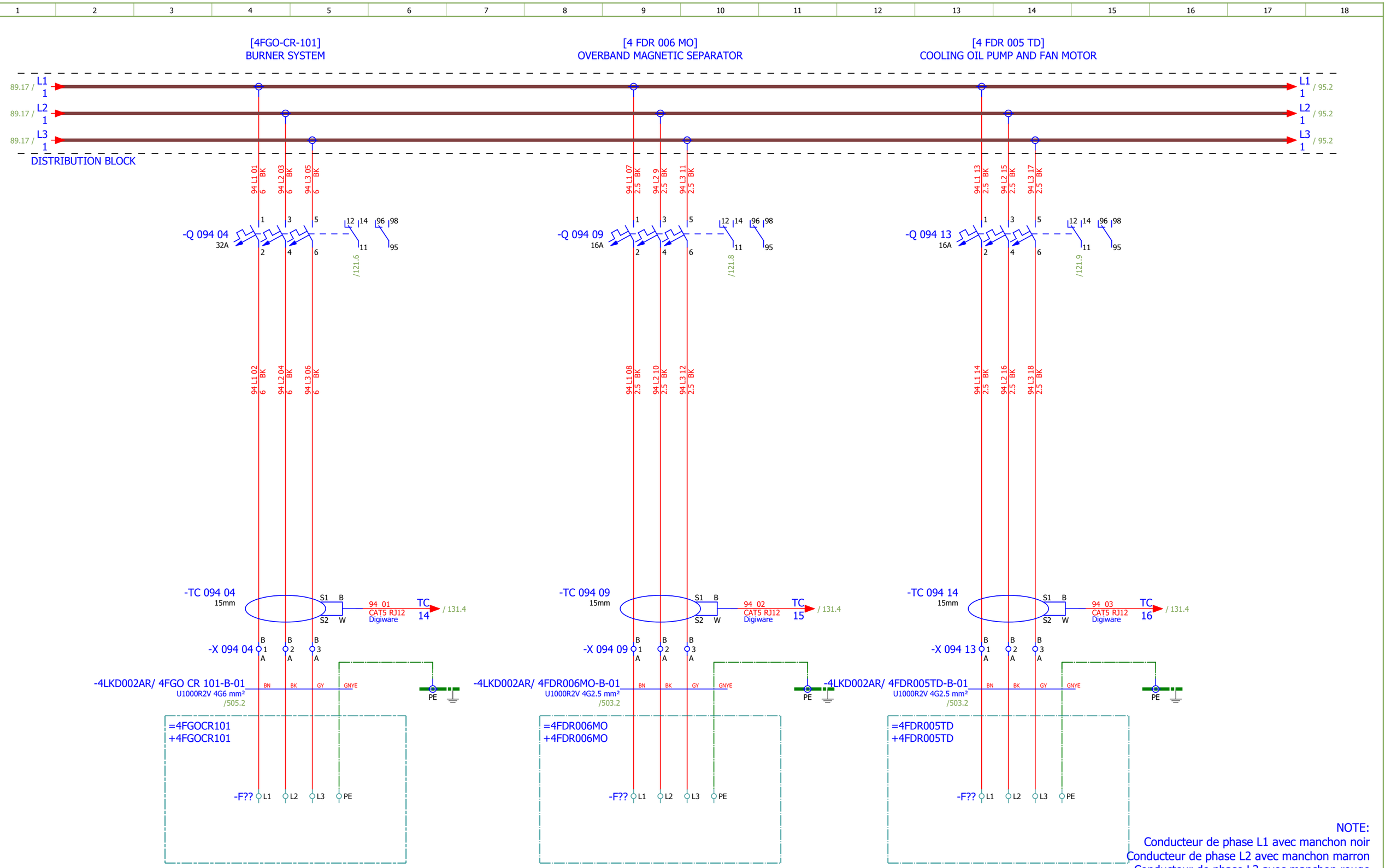

NOTE:
Conducteur de phase L1 avec manchon noir
Conducteur de phase L2 avec manchon marron
Conducteur de phase L3 avec manchon rouge

Date:	17.03.2026.	SINTAKSA A Voith Company	Client:	ANDRITZ TEP d.o.o. Ulica 108. brigade ZNG 84, 35000 Slavonski Brod, Croatia	Scope: BOILER/LOW VOLTAGE CABINET BOILER (NORMAL) 2	Project: BRC-4	Unit & Issuer: ATEP0	Number: 1874	Revision: G
Drawn:	Luka Božičević								#D
Approved:	Grga Kolić		Object:	RDF Albioma Les Bois Rouge Reunion - France	Content: BURNER SYSTEM & OVERBAND MAGNETIC SEPARATOR & COOLING OIL PUMP AND FAN MOTOR	Drawing designation: BRC-4-ATEP0-1874-G			=4LKD001AR
Format:	A3								+4LKD002AR

Sheet: 94
Next: 95

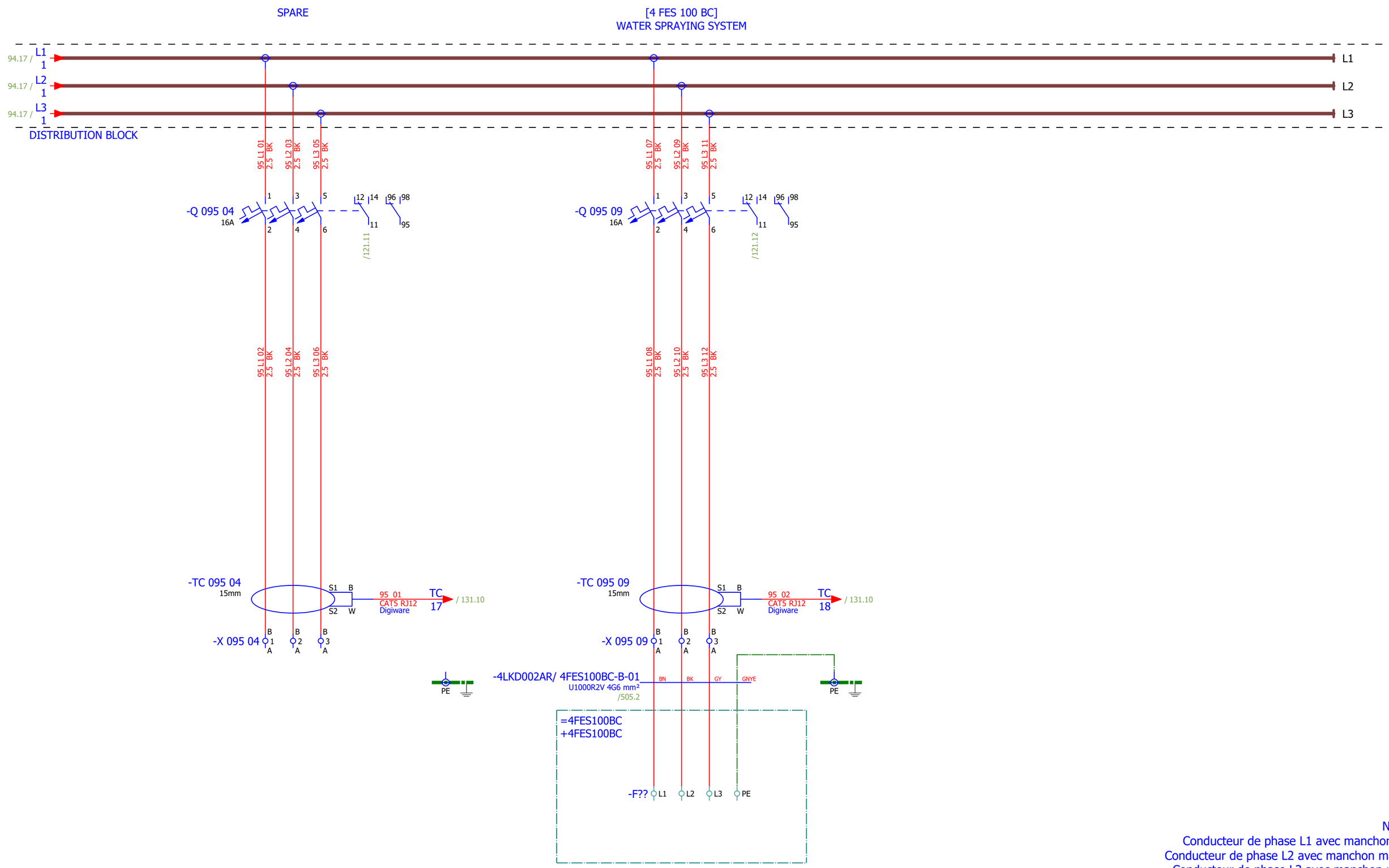

NOTE:
Conducteur de phase L1 avec manchon noir
Conducteur de phase L2 avec manchon marron
Conducteur de phase L3 avec manchon rouge

Date:	17.03.2026.	SINTAKSA A Voith Company	Client:	ANDRITZ TEP d.o.o. Ulica 108. brigade ZNG 84, 35000 Slavonski Brod, Croatia	Scope: BOILER/LOW VOLTAGE CABINET BOILER (NORMAL) 2	Project: BRC-4	Unit & Issuer: ATEP0	Number: 1874	Revision: G
Drawn:	Luka Božičević								#D
Approved:	Grga Kolić		Object:	RDF Albioma Les Bois Rouge Reunion - France	Content: PNEUMATIC RAPPING SYSTEM & WATER SPRAYING SYSTEM	Drawing designation: BRC-4-ATEP0-1874-G			=4LKD001AR
Format:	A3								+4LKD002AR

Sheet: 95
Next: 96

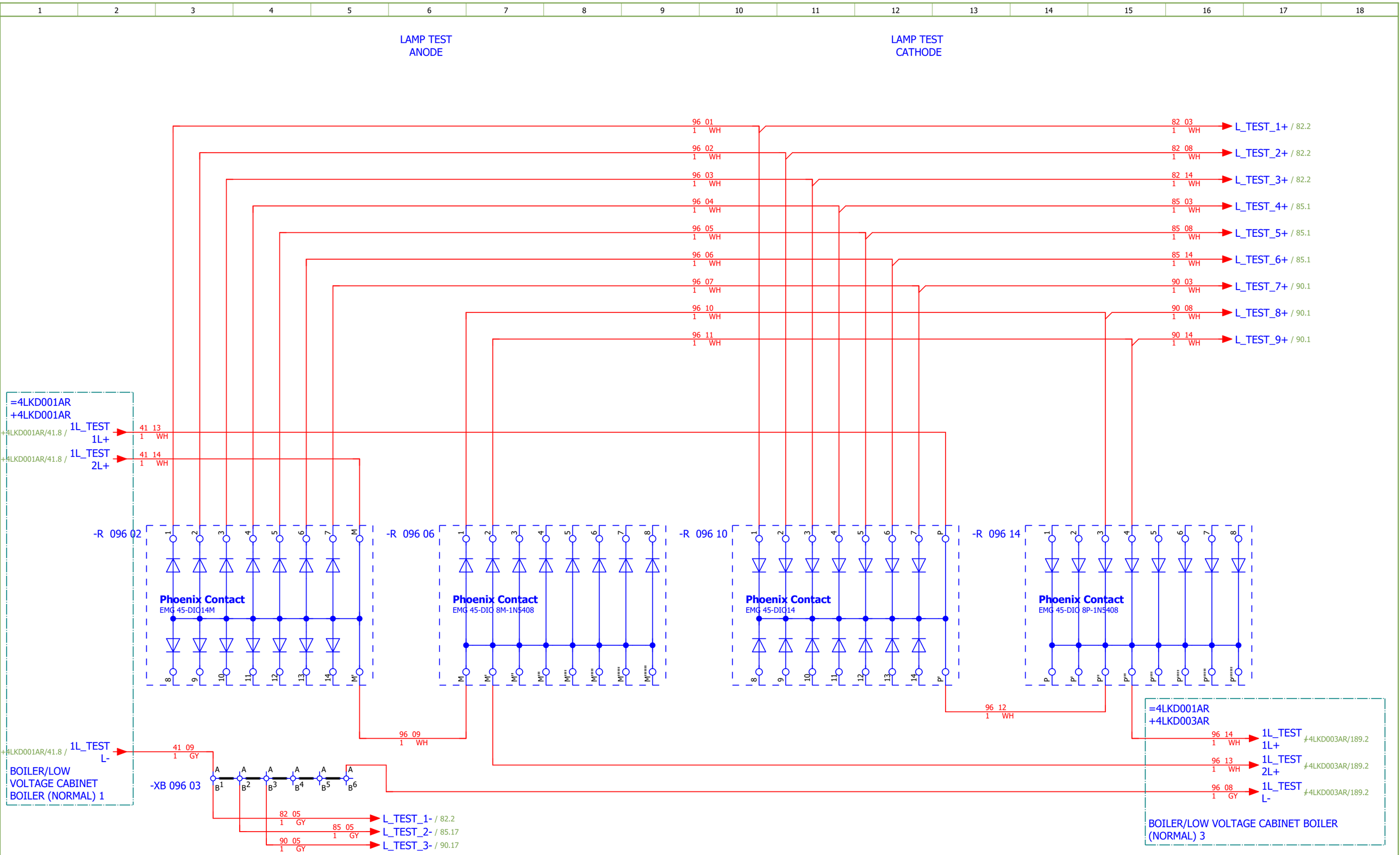

Date:	17.03.2026.	SINTAKSA A Voith Company	Client: ANDRITZ TEP d.o.o. Ulica 108. brigade ZNG 84, 35000 Slavonski Brod, Croatia	Scope: BOILER/LOW VOLTAGE CABINET BOILER (NORMAL) 2	Project: BRC-4	Unit & Issuer: ATEP0	Number: 1874	Revision: G	
Drawn:	Luka Božičević								#D
Approved:	Grga Kolić		Object: RDF Albioma Les Bois Rouge Reunion - France	Content: LAMP TEST	Drawing designation: BRC-4-ATEP0-1874-G			=4LKD001AR	Sheet: 96
Format:	A3							+4LKD002AR	Next: 111

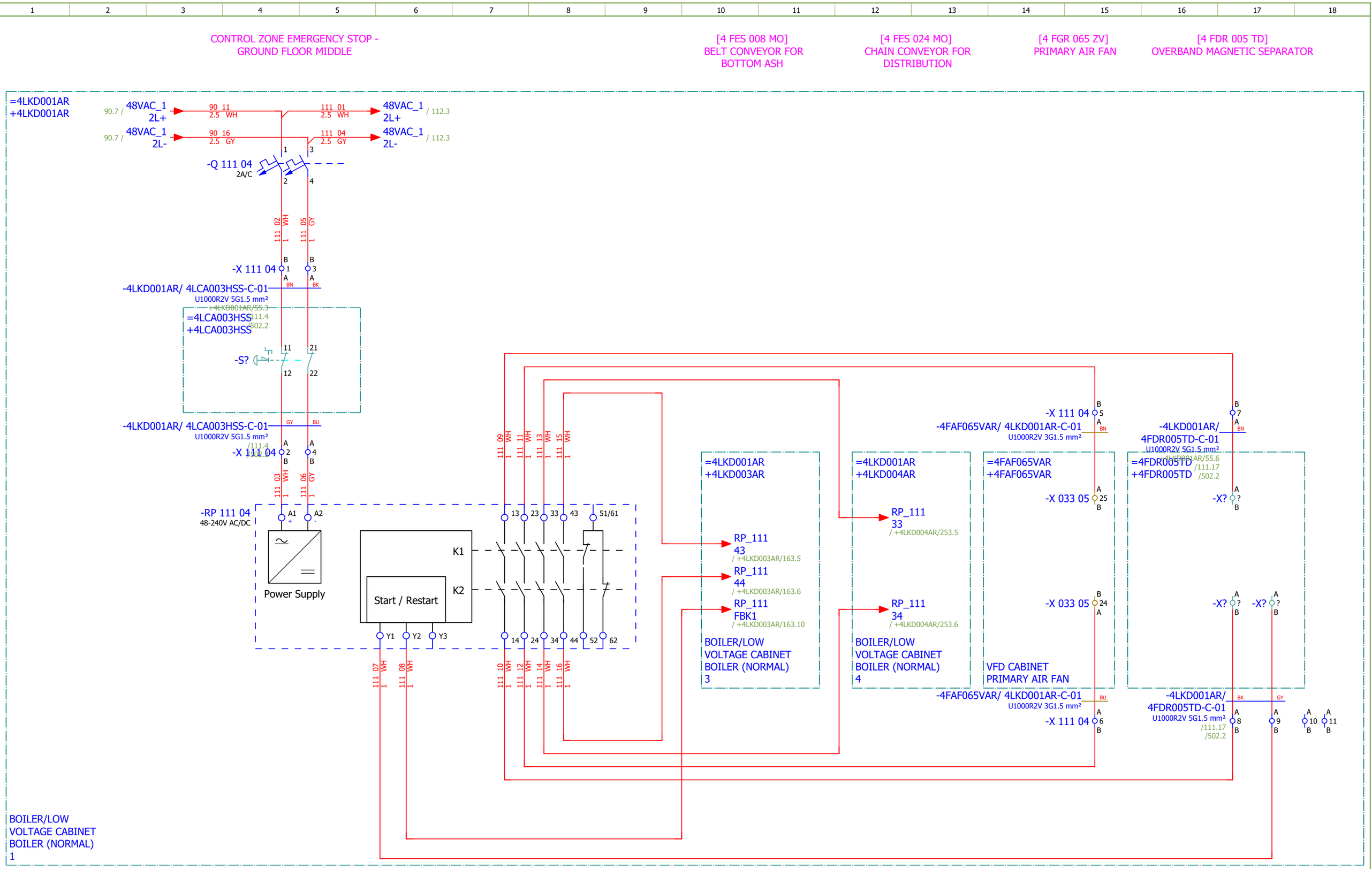

Date:	17.03.2026.	SINTAKSA A Voith Company	Client:	ANDRITZ TEP d.o.o. Ulica 108. brigade ZNG 84, 35000 Slavonski Brod, Croatia	Scope:	BOILER/LOW VOLTAGE CABINET BOILER (NORMAL) 2	Project: BRC-4	Unit & Issuer: ATEP0	Number: 1874	Revision: G	#NA
Drawn:	Luka Božičević										
Approved:	Grga Kolić		Object:	RDF Albioma Les Bois Rouge Reunion - France	Content:	EMERGENCY SHUTDOWN - GROUND FLOOR MIDDLE	Drawing designation: BRC-4-ATEP0-1874-G			=4LKD001AR	Sheet: 111
Format:	A3									+4LKD002AR	Next: 112

CONTROL ZONE EMERGENCY STOP -
2nd, 3rd, 4th, 5th FLOOR MIDDLE

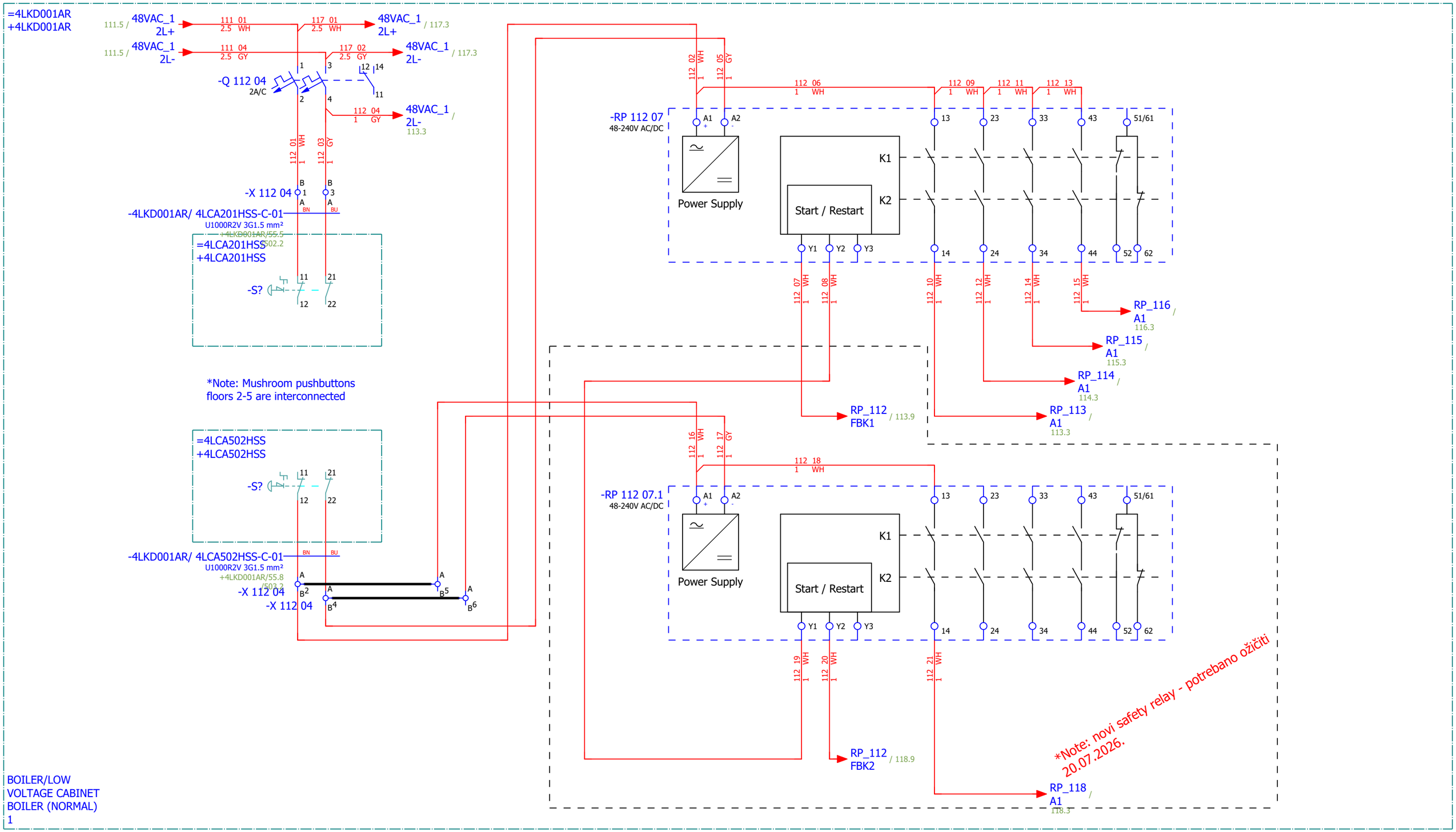

Date:	17.03.2026.	SINTAKSA A Voith Company	Client:	ANDRITZ TEP d.o.o. Ulica 108. brigade ZNG 84, 35000 Slavonski Brod, Croatia	Scope:	BOILER/LOW VOLTAGE CABINET BOILER (NORMAL) 2	Project: BRC-4	Unit & Issuer: ATEP0	Number: 1874	Revision: G	#NA
Drawn:	Luka Božičević										
Approved:	Grga Kolić		Object:	RDF Albioma Les Bois Rouge Reunion - France	Content:	EMERGENCY SHUTDOWN - SECOND FLOOR MIDDLE	Drawing designation: BRC-4-ATEP0-1874-G			=4LKD001AR	Sheet: 112
Format:	A3									+4LKD002AR	Next: 113

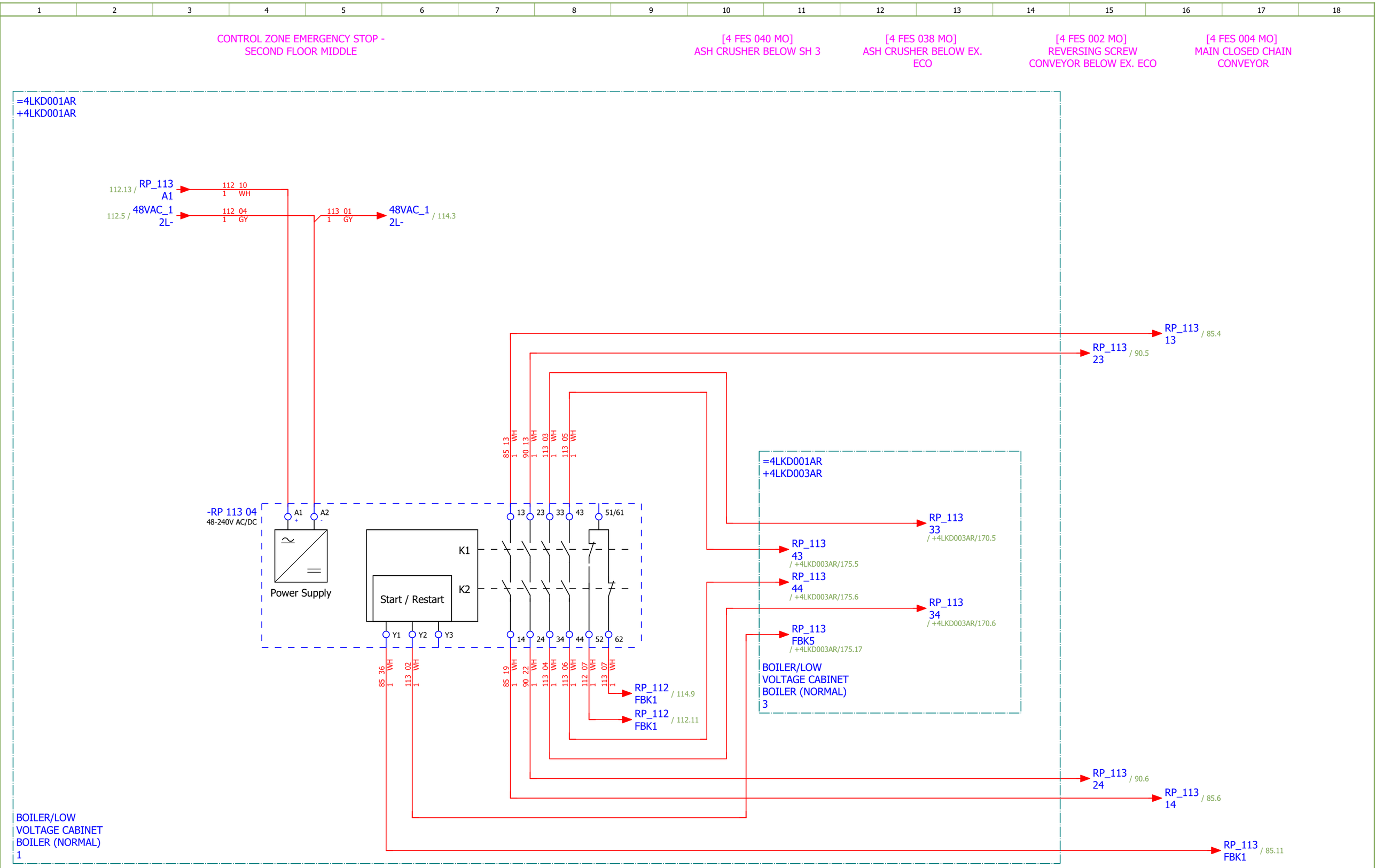

Date:	17.03.2026.	SINTAKSA A Voith Company	Client: ANDRITZ TEP d.o.o. Ulica 108. brigade ZNG 84, 35000 Slavonski Brod, Croatia	Scope: BOILER/LOW VOLTAGE CABINET BOILER (NORMAL) 2	Project: BRC-4	Unit & Issuer: ATEP0	Number: 1874	Revision: G	
Drawn:	Luka Božičević								#NA
Approved:	Grga Kolić		Object: RDF Albioma Les Bois Rouge Reunion - France	Content: EMERGENCY SHUTDOWN - SECOND FLOOR MIDDLE	Drawing designation: BRC-4-ATEP0-1874-G			=4LKD001AR	Sheet: 113
Format:	A3							+4LKD002AR	Next: 114

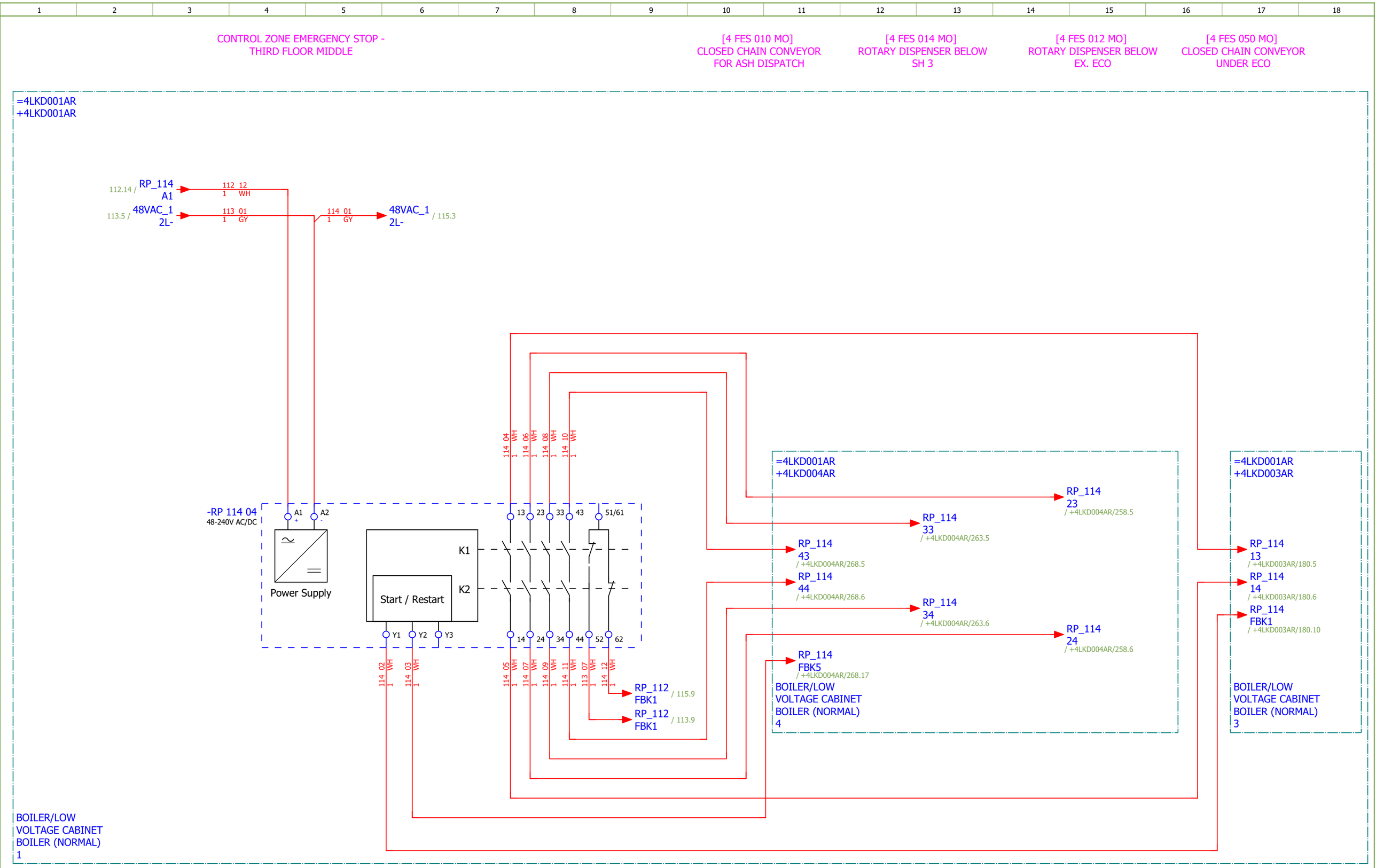

Date:	17.03.2026.	SINTAKSA A Voith Company	Client:	ANDRITZ TEP d.o.o. Ulica 108. brigade ZNG 84, 35000 Slavonski Brod, Croatia	Scope:	BOILER/LOW VOLTAGE CABINET BOILER (NORMAL) 2	Project: BRC-4	Unit & Issuer: ATEP0	Number: 1874	Revision: G	#NA
Drawn:	Luka Božičević		Object:	RDF Albioma Les Bois Rouge Reunion - France	Content:	EMERGENCY SHUTDOWN - THIRD FLOOR MIDDLE	Drawing designation: BRC-4-ATEP0-1874-G			=4LKD001AR	Sheet: 114
Approved:	Grga Kolić									+4LKD002AR	Next: 115
Format:	A3										

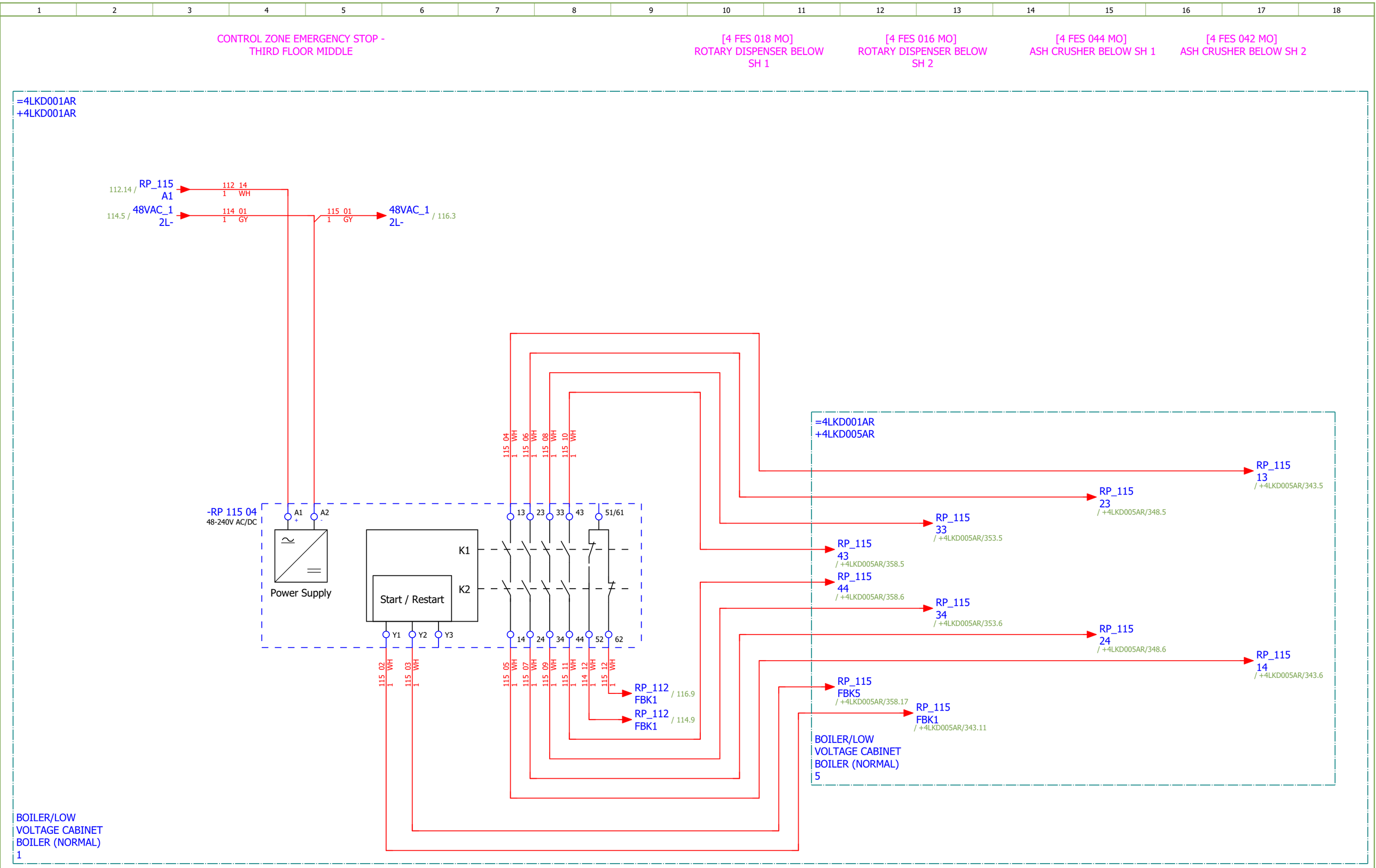

Date:	17.03.2026.	SINTAKSA A Voith Company	Client:	ANDRITZ TEP d.o.o. Ulica 108. brigade ZNG 84, 35000 Slavonski Brod, Croatia	Scope: BOILER/LOW VOLTAGE CABINET BOILER (NORMAL) 2	Project: BRC-4	Unit & Issuer: ATEP0	Number: 1874	Revision: G
Drawn:	Luka Božičević								#NA
Approved:	Grga Kolić		Object:	RDF Albioma Les Bois Rouge Reunion - France	Content: EMERGENCY SHUTDOWN - FOURTH FLOOR MIDDLE	Drawing designation: BRC-4-ATEP0-1874-G		=4LKD001AR	Sheet: 115
Format:	A3							+4LKD002AR	Next: 116

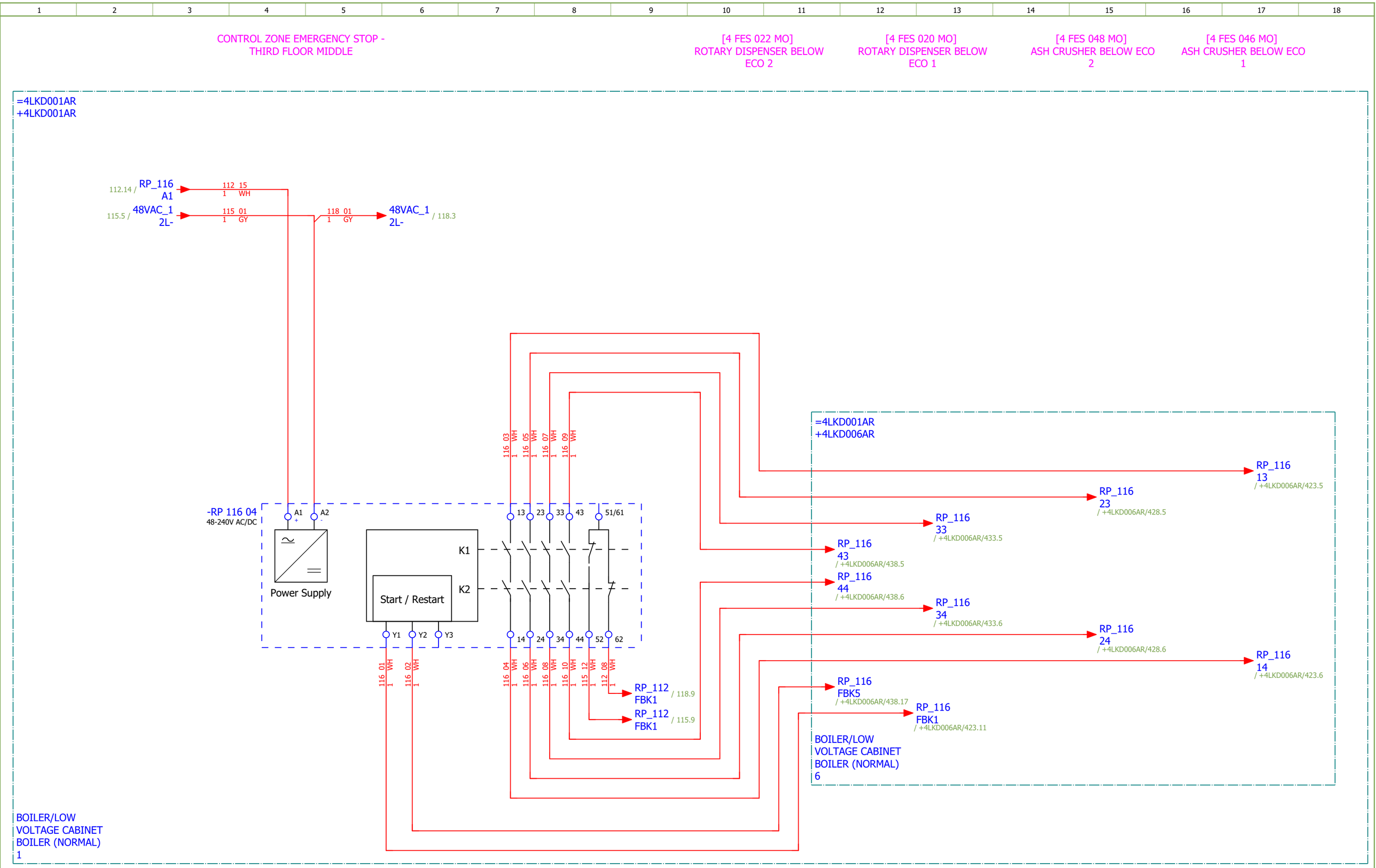

Date:	17.03.2026.	SINTAKSA A Voith Company	Client:	ANDRITZ TEP d.o.o. Ulica 108. brigade ZNG 84, 35000 Slavonski Brod, Croatia	Scope: BOILER/LOW VOLTAGE CABINET BOILER (NORMAL) 2	Project: BRC-4	Unit & Issuer: ATEP0	Number: 1874	Revision: G
Drawn:	Luka Božičević		Object:	RDF Albioma Les Bois Rouge Reunion - France	Content: EMERGENCY SHUTDOWN - FIFTH FLOOR MIDDLE	Drawing designation: BRC-4-ATEP0-1874-G			=4LKD001AR
Approved:	Grga Kolić								+4LKD002AR
Format:	A3								

#NA

Sheet: 116

Next: 117

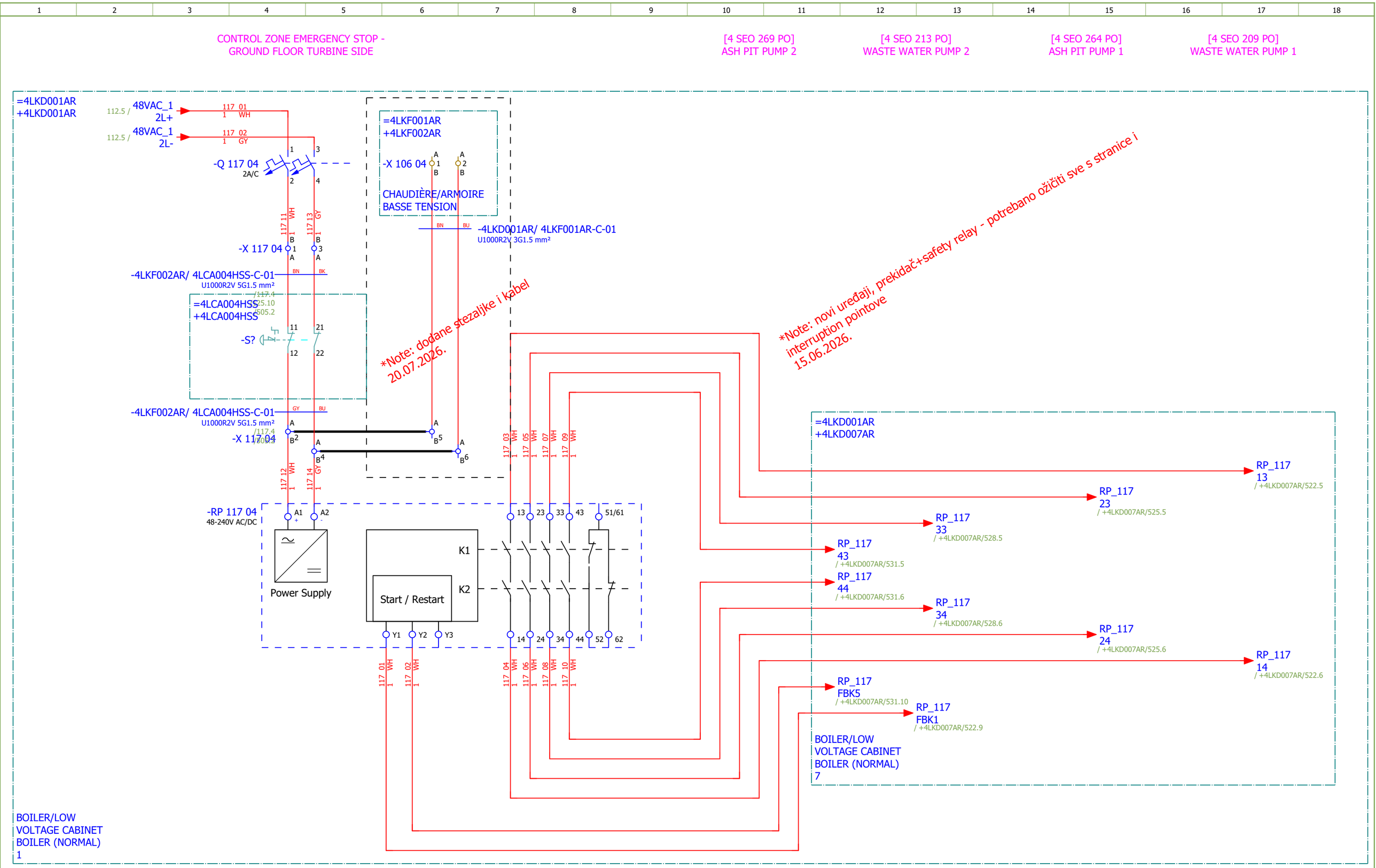

Date:	17.03.2026.	SINTAKSA A Voith Company	Client: ANDRITZ TEP d.o.o. Ulica 108. brigade ZNG 84, 35000 Slavonski Brod, Croatia	Scope: BOILER/LOW VOLTAGE CABINET BOILER (NORMAL) 2	Project: BRC-4	Unit & Issuer: ATEP0	Number: 1874	Revision: G	
Drawn:	Luka Božičević								#NA
Approved:	Grga Kolić		Object: RDF Albioma Les Bois Rouge Reunion - France	Content: EMERGENCY SHUTDOWN - GROUND FLOOR TURBINE SIDE	Drawing designation: BRC-4-ATEP0-1874-G			=4LKD001AR	Sheet: 117
Format:	A3							+4LKD002AR	Next: 118

1	2	3	4	5	6	7	8	9	10	11	12	13	14	15	16	17	18

CONTROL ZONE EMERGENCY STOP -
THIRD FLOOR MIDDLE

[4 FES 010 MO]
CLOSED CHAIN CONVEYOR
FOR ASH DISPATCH

[4 FES 014 MO]
ROTARY DISPENSER BELOW
SH 3

[4 FES 012 MO]
ROTARY DISPENSER BELOW
EX. ECO

[4 FES 050 MO]
CLOSED CHAIN CONVEYOR
UNDER ECO

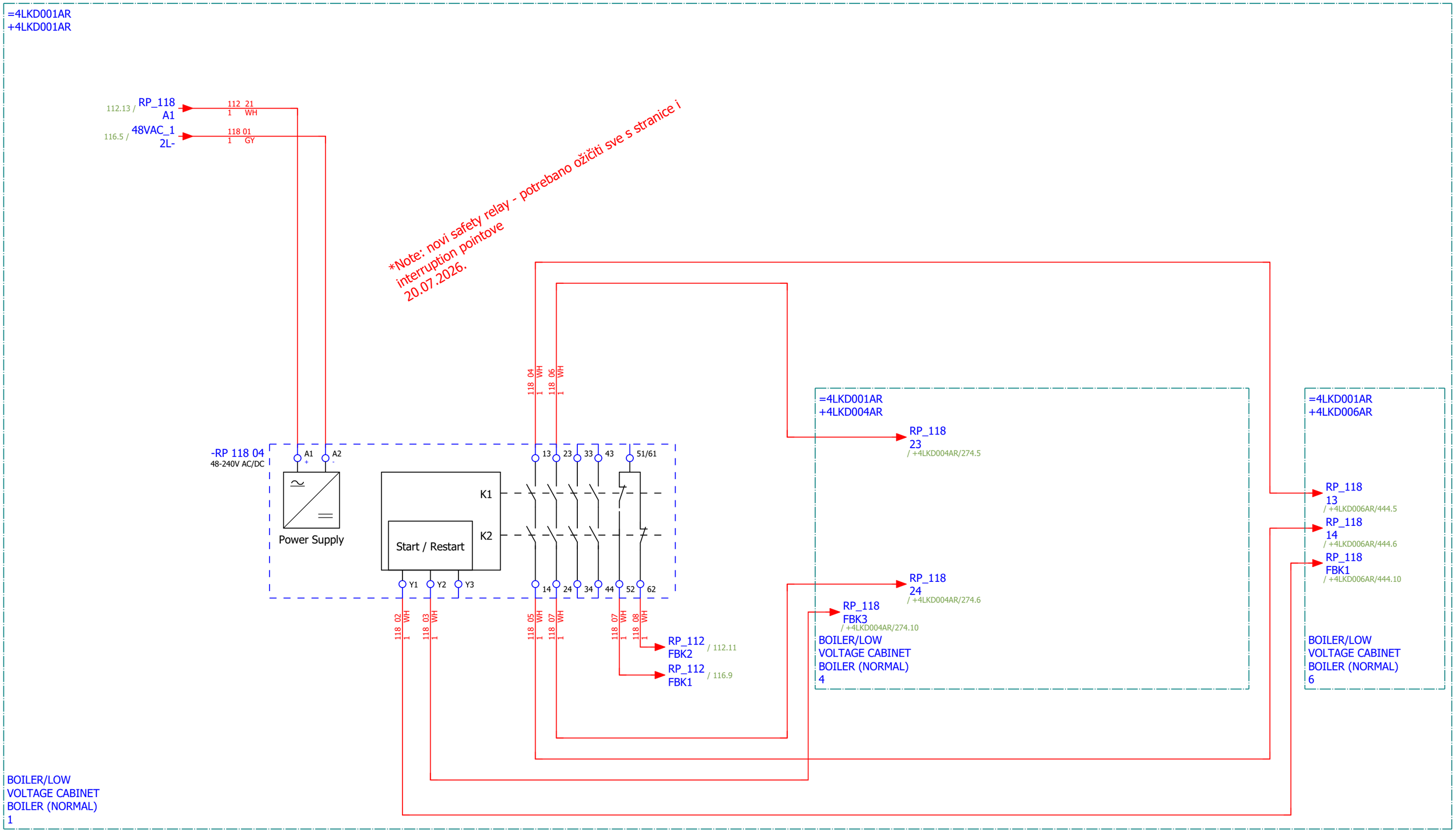

Date:	17.03.2026.	SINTAKSA A Voith Company	Client:	ANDRITZ TEP d.o.o. Ulica 108. brigade ZNG 84, 35000 Slavonski Brod, Croatia	Scope: BOILER/LOW VOLTAGE CABINET BOILER (NORMAL) 2	Project: BRC-4	Unit & Issuer: ATEP0	Number: 1874	Revision: G
Drawn:	Luka Božičević		Object:	RDF Albioma Les Bois Rouge Reunion - France	Content: EMERGENCY SHUTDOWN - THIRD FLOOR MIDDLE	Drawing designation: BRC-4-ATEP0-1874-G			=4LKD001AR
Approved:	Grga Kolić								+4LKD002AR
Format:	A3								

#NA

Sheet: 118

Next: 121

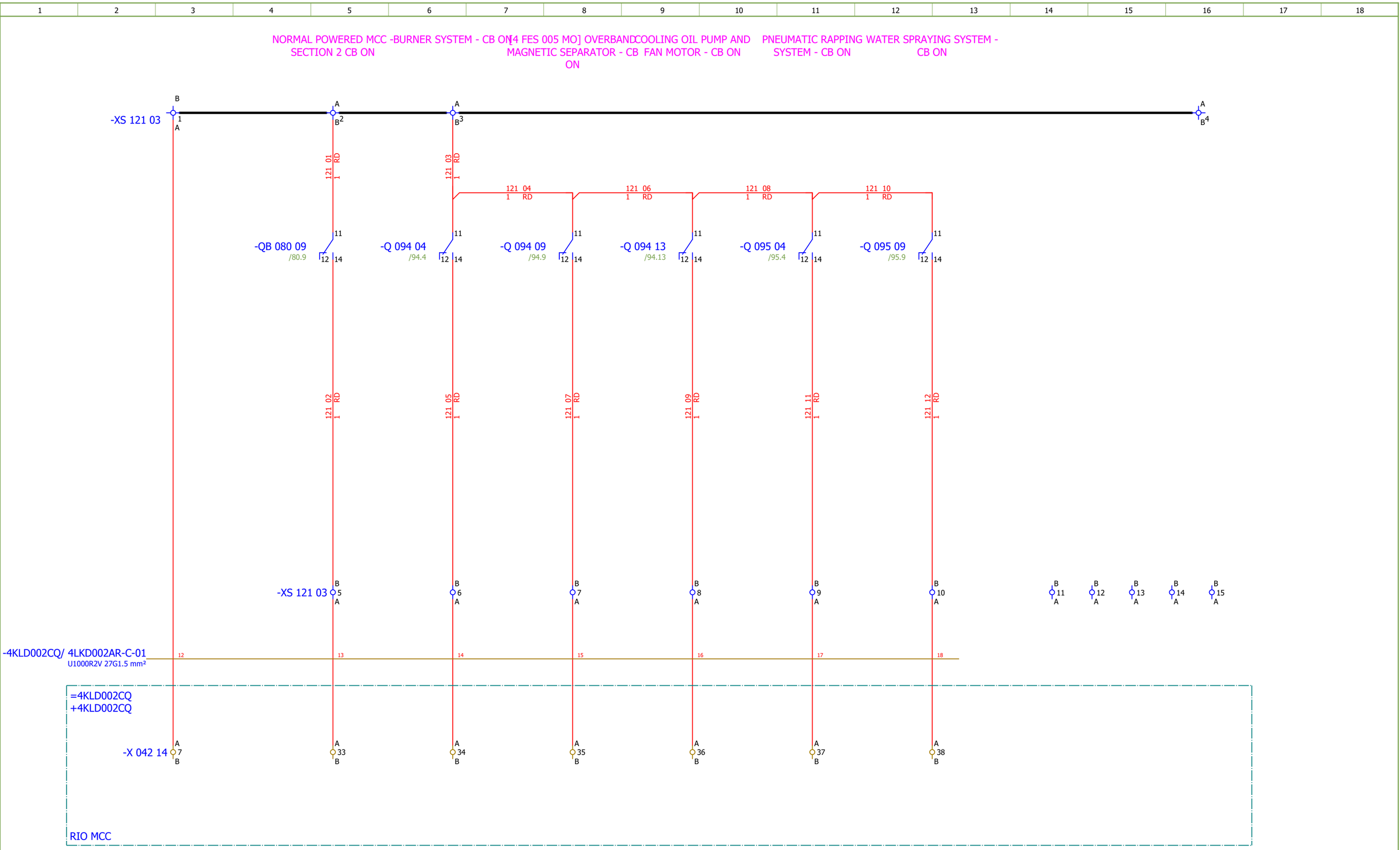

Date:	17.03.2026.	SINTAKSA A Voith Company	Client:	ANDRITZ TEP d.o.o. Ulica 108. brigade ZNG 84, 35000 Slavonski Brod, Croatia	Scope: BOILER/LOW VOLTAGE CABINET BOILER (NORMAL) 2	Project: BRC-4	Unit & Issuer: ATEP0	Number: 1874	Revision: G
Drawn:	Luka Božičević								#QA
Approved:	Grga Kolić		Object:	RDF Albioma Les Bois Rouge Reunion - France	Content: SIGNALIZATION	Drawing designation: BRC-4-ATEP0-1874-G		=4LKD001AR	Sheet: 121
Format:	A3							+4LKD002AR	Next: 125

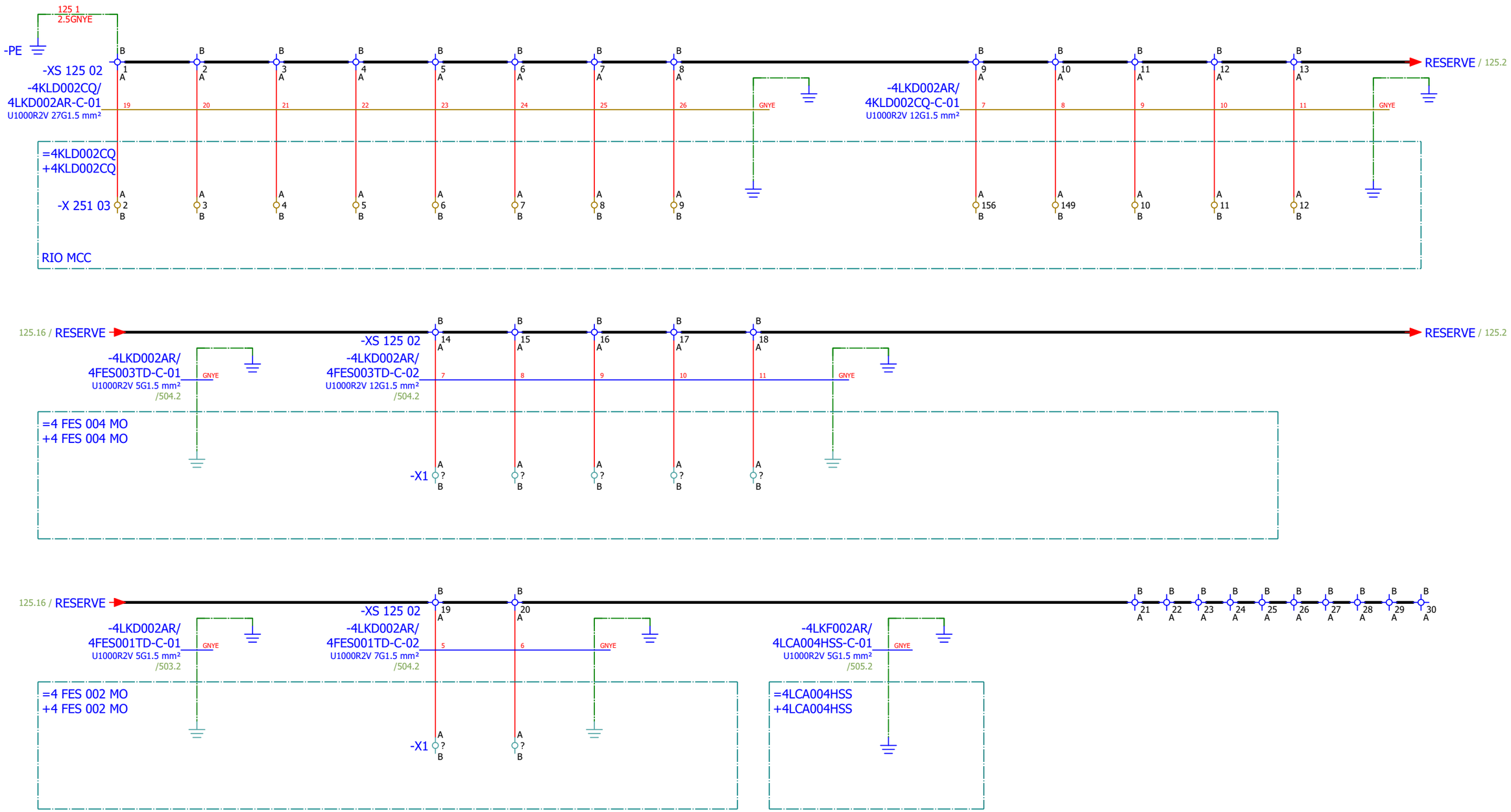

Date:	17.03.2026.	SINTAKSA A Voith Company	Client:	ANDRITZ TEP d.o.o. Ulica 108. brigade ZNG 84, 35000 Slavonski Brod, Croatia	Scope: BOILER/LOW VOLTAGE CABINET BOILER (NORMAL) 2	Project: BRC-4	Unit & Issuer: ATEP0	Number: 1874	Revision: G
Drawn:	Luka Božičević								#QB
Approved:	Grga Kolić		Object:	RDF Albioma Les Bois Rouge Reunion - France	Content: SPARE	Drawing designation: BRC-4-ATEP0-1874-G		=4LKD001AR	Sheet: 125
Format:	A3							+4LKD002AR	Next: 131

MEASUREMENT

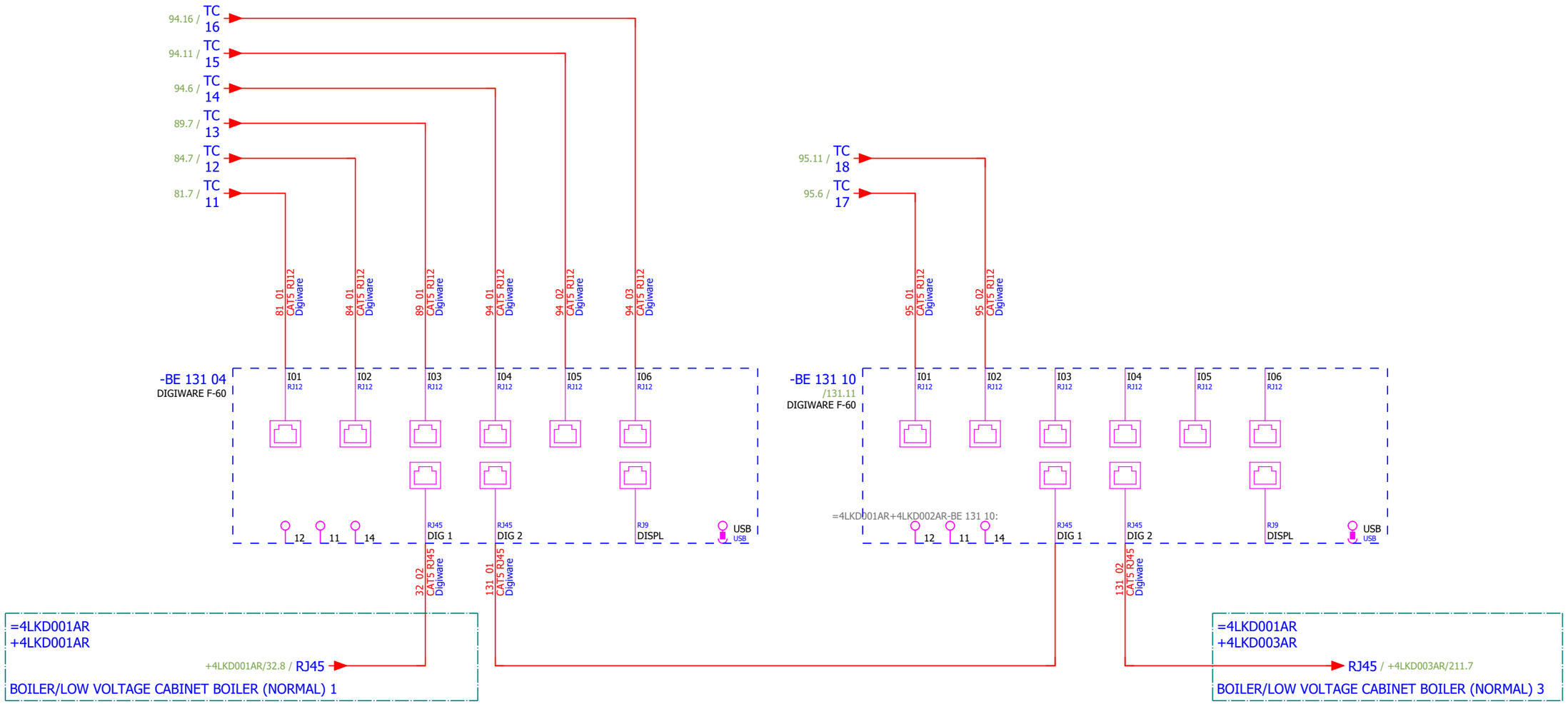

Date:	17.03.2026.	SINTAKSA A Voith Company	Client:	ANDRITZ TEP d.o.o. Ulica 108. brigade ZNG 84, 35000 Slavonski Brod, Croatia	Scope: BOILER/LOW VOLTAGE CABINET BOILER (NORMAL) 2	Project: BRC-4	Unit & Issuer: ATEP0	Number: 1874	Revision: G
Drawn:	Luka Božičević								#V
Approved:	Grga Kolić		Object:	RDF Albioma Les Bois Rouge Reunion - France	Content: COMMUNICATION	Drawing designation: BRC-4-ATEP0-1874-G			=4LKD001AR
Format:	A3								+4LKD002AR

Sheet: 131
Next: 401

Sorting number	Part number	Quantity	Manufacturer	Device	Device description	Device designation
1.	SOC.48290112	1	Socomec	Current module DIRIS Digiware I-60, 6 current inputs, Metering	Current module DIRIS Digiware I-60, 6 current inputs, Metering	-BC 081 11
2.	SOC.47290126	2	Socomec	Module location default ISOM DIGIWARE F-60	Network type - Power distribution, Control circuits, Medical Rated voltage - 24 VDC Type - Insulation Fault Locator Indication - Digital	-BE 131 04;-BE 131 10
3.	SE.ZB4BVBG1	9	Schneider Electric	white light block with body/fixing collar integral LED 24...120VAC/DC		-HL 082 02...-HL 082 04;-HL 085 02...-HL 085 04;-HL 090 02...-HL 090 04
4.	SE.ZB4BV043	5	Schneider Electric	Red pilot light head Ø22 plain lens for integral LED	Complete body light block assembly, Harmony XB4, metal, universal LED, body fixing collar, 24...120V AC DC Head for pilot light: Red	-HL 082 02;-HL 085 02;-HL 085 03;-HL 090 02;-HL 09 0 03
5.	SE.ZBZ32	9	Schneider Electric	Harmony XB4	Legend holder, plastic	-HL 082 02...-HL 082 04;-HL 085 02...-HL 085 04;-HL 090 02...-HL 090 04
6.	SE.ZB4BV033	1	Schneider Electric	Green pilot light head Ø22 plain lens for integral LED	Complete body light block assembly, Harmony XB4, metal, universal LED, body fixing collar, 24...120V AC DC Head for pilot light: Green	-HL 082 03
7.	SE.ZB4BV053	3	Schneider Electric	Orange pilot light head Ø22 plain lens for integral LED	Complete body light block assembly, Harmony XB4, metal, universal LED, body fixing collar, 24...120V AC DC Head for pilot light: Orange	-HL 082 04;-HL 085 04;-HL 090 04
8.	SE.RXM4AB2P7	6	Schneider Electric	Miniature Plug-in relay - Zelio RXM 4 C/O 230 V AC 6 A with LED	Miniature Plug-in relay - Zelio RXM 4 C/O 230 V AC 6 A with LED	-K 082 15;-K 082 16;-K 086 08;-K 086 10;-K 091 08;-K 091 10
9.	SE.RXZE2S114M	6	Schneider Electric	Socket	For RXM2/RXM4 relays Screw connectors Separate contact 4 C/O	-K 082 15;-K 082 16;-K 086 08;-K 086 10;-K 091 08;-K 091 10
10.	SE.RXM041FU7	6	Schneider Electric	Protection module	RC circuit - 110..240 V AC - for RPZ/RXZ sockets	-K 082 15;-K 082 16;-K 086 08;-K 086 10;-K 091 08;-K 091 10
11.	SE.LC1D50AP7	1	Schneider Electric	TeSys D contactor - 3P(3 NO) - AC-3 - 440 V 50 A	TeSys D contactor - 3P(3 NO) - AC-3 - <= 440 V 50 A - 230 V AC 50/60 Hz coil	-KM 081 05
12.	SE.LADN31	5	Schneider Electric	Auxiliary contact block TeSys - 3 NO + 1 NC,screw-clamps terminals	Auxiliary contact block TeSys - 3 NO + 1 NC,screw-clamps terminals	-KM 081 05;-KM 084 05;-KM 084 07;-KM 089 05;-KM 0 89 07
13.	SE.LAD4RC3U	1	Schneider Electric	RC 110-240V	D40A to D65A RC 110-240V Suppressor	-KM 081 05
14.	SE.LC1D12P7	4	Schneider Electric	Contactor TeSys LC1-D - 3P - AC-3 440V 12 A, Coil 230 V AC	Contactor TeSys LC1-D - 3P - AC-3 440V 18 A, Coil 230 V AC	-KM 084 05;-KM 084 07;-KM 089 05;-KM 089 07
15.	SE.LAD4RCU	4	Schneider Electric	RC Transient Suppressor 110 TO 250 VAC	RC Transient Suppressor 110 TO 250 VAC	-KM 084 05;-KM 084 07;-KM 089 05;-KM 089 07
16.	SE.LAD9R1V	2	Schneider Electric	Reversing mechanical interlock kit	Tesys D, reversing mechanical interlock kit, with electrical interlocking, for LC1D09 to LC1D38	-KM 084 05;-KM 089 05
17.	SOC.192A1204	1	Socomec	Ammeter 0-40A	Scale: 0-40A (AC) Dimensions: 48x48mm	-PG 081 08
18.	SE.GV3P50	1	Schneider Electric	3-pole transformator protection circuit breaker		-Q 081 05
19.	SE.GVAE11	3	Schneider Electric	Auxiliary contact block	1NO+1NC Front mounting For GV2	-Q 081 05;-Q 084 05;-Q 089 05
20.	SE.GVAD0110	3	Schneider Electric	TeSys GV AD0110 - auxiliary contact - 1 NO + 1 NC (fault)		-Q 081 05;-Q 084 05;-Q 089 05
21.	SE.A9F74202	6	Schneider Electric	2-pole MCB, 2A/C	Nominal current: 2 A Tripping curve: C	-Q 082 04;-Q 082 14;-Q 085 04;-Q 086 08;-Q 090 04;-Q 091 08
22.	SE.GV2P08	2	Schneider Electric	3-pole transformator protection circuit breaker		-Q 084 05;-Q 089 05

Sorting number	Part number	Quantity	Manufacturer	Device	Device description	Device designation
23.	SE.18727	1	Schneider Electric	Miniature circuit breaker NG125H 32A 3P C	Range: Acti9 Poles description: 3P [In] rated current: 32 A at 40 °C Network type: DC, AC Trip unit technology: Thermal-magnetic Curve code: C Breaking capacity: 36 kA Icu at 380...415 V AC 50/60 Hz conforming to EN/IEC 60947-2	-Q 094 04
24.	SE.19072	5	Schneider Electric	Auxiliary contact - 1 OC + 1 SD - 6 A - 220..240 V - for NG125	Auxiliary OC and fault contact, Acti9 NG125, 1 OC + 1 SD, 220VAC to 240VAC (max 6A), 415VAC (max 3A)	-Q 094 04;-Q 094 09;-Q 094 13;-Q 095 04;-Q 095 09
25.	SE.18724	4	Schneider Electric	Miniature circuit breaker NG125H 16A 3P C	Range: Acti9 Poles description: 3P [In] rated current: 16 A at 40 °C Network type: DC, AC Trip unit technology: Thermal-magnetic Curve code: C Breaking capacity: 36 kA Icu at 380...415 V AC 50/60 Hz conforming to EN/IEC 60947-2	-Q 094 09;-Q 094 13;-Q 095 04;-Q 095 09
26.	SE.C10F3TM100	1	Schneider Electric	Circuit breaker ComPacT NSX100F, 36kA	Circuit breaker ComPacT NSX100F, 36kA at 415VAC, TMD trip unit 100A, 3 poles 3d	-QB 080 09
27.	SE.29450	1	Schneider Electric	Auxiliary contact 1 OF or 1 SD or 1 SDE or 1 SDV	Auxiliary contact 1 OF or 1 SD or 1 SDE or 1 SDV	-QB 080 09
28.	SE.LV429337T	1	Schneider Electric	Direct rotary handle, ComPacT NSX 100/160/250, black handle, IP40	Direct rotary handle, ComPacT NSX 100/160/250, black handle, IP40	-QB 080 09
29.	SE.LVS04033	1	Schneider Electric	LINERGY DP	LINERGY DP 3P D.BLK/COMPACT 250A 27HOLES	-QB 080 09
30.	SE.LV429517	1	Schneider Electric	Insulation accessories 1 long terminal shield for breaker or plug-in base, 3P - NSX100...250	Insulation accessories 1 long terminal shield for breaker or plug-in base, 3P - NSX100...250	-QB 080 09
31.	PXC.2950129	1	Phoenix Contact	Component for protective circuit	Diode module, with 14 diodes, common anode, diode type 1N 4007	-R 096 02
32.	PXC.2954882	1	Phoenix Contact	Diode block	Diode module, with eight diodes, common anode, diode type 1N 5408	-R 096 06
33.	PXC.2950116	1	Phoenix Contact	Component for protective circuit	Diode module, with 14 diodes, common cathode, diode type 1N 4007	-R 096 10
34.	PXC.2954879	1	Phoenix Contact	Component for protective circuit	Diode module, with eight diodes, common cathode, diode type 1N 5408	-R 096 14
35.	SE.XPSBAC34AP	5	Schneider Electric	Safety module	Harmony Safety Automation Estop or guard ,Harmony XPS, connected to supply terminals 48-240 V AC/DC , no inputs, screw	-RP 082 05;-RP 085 06;-RP 085 12;-RP 090 05;-RP 09 0 11
36.	SE.XB4BA21	1	Schneider Electric	Black flush complete pushbutton Ø22 spring return 1NO "unmarked"	Black flush complete pushbutton Ø22 spring return 1NO	-S 082 06
37.	SE.XB4BD33	5	Schneider Electric	Selector switch, BLACK, 1-0-2, 2NO	Metal Black Ø22 3 positions 2 NO	-S 082 06.1;-S 085 07;-S 085 07.1;-S 090 07;-S 090 0 7.1
38.	SE.ZBE101	7	Schneider Electric	Single contact block NO	Harmony XB4 Silver alloy 1 NO	-S 082 06.1;-S 085 07.1;-S 090 07.1
39.	SOC.47506030	8	Socomec	TORES LOCATION SENSOR DELTA IP-30 (30mm)	Fault locating differential transformer IP-30 Maximal diameter of cable: 30mm	-TC 081 05;-TC 084 05;-TC 089 05;-TC 094 04;-TC 09 4 09;-TC 094 14;-TC 095 04;-TC 095 09
40.	SOC.47290590	8	Socomec	ISOM T-15	Connection adaptor ISOM T-15 to ISOM Digiware F-60 modules	-TC 081 05;-TC 084 05;-TC 089 05;-TC 094 04;-TC 09 4 09;-TC 094 14;-TC 095 04;-TC 095 09

Sorting number	Part number	Quantity	Manufacturer	Device	Device description	Device designation
41.	SOC.192T2106	1	Socomec	Bar or cable-through CT TCB 17-20 60A/5A Class 1 1VA	Accuracy class: 0.2s — 0.5 or 1. Dielectric quality: 3 kV — 50 Hz - 1 min. Operating frequency: 50 — 60 Hz. Permanent overload: 1.2 In. Insulation class: E (120 °C).	-TCU 081 05
42.	SOC.48290501	3	Socomec	Solid current sensor TE-18 18mm 25-63A	Solid current sensor TE-18 18mm 25-63A Dimensions max de passage de cable: D:8,6mm	-TCU 081 05.1;-TCV 081 05;-TCW 081 05
43.	PXC.3044199	3	Phoenix Contact	UT 16 - Feed-through terminal block	Feed-through terminal block, nom. voltage: 1000 V, nominal current: 76 A, number of connections: 2, connection method: Screw connection, Rated cross section: 16 mm2, cross section: 1.5 mm2 - 25 mm2, mounting type: NS 35/7,5, NS 35/15, color: gray	-X 081 05
44.	PXC.3209510	146	Phoenix Contact	PT 2,5 - Feed-through terminal block	Feed-through terminal block, nom. voltage: 800 V, nominal current: 24 A, number of connections: 2, number of positions: 1, connection method: Push-in connection, Rated cross section: 2.5 mm2, cross section: 0.14 mm2 - 4 mm2, mounting type: NS 35/7,5, NS 35/15, color: gray	-X 082 08;-X 083 06;-X 084 05;-X 085 09;-X 087 06;-X 089 05;-X 090 09;-X 092 06;-X 094 09;-X 094 13;-X 095 04;-X 095 09;-XB 096 03;-XS 121 03;-XS 125 02
45.	SE.NSYTRV42SC	1	Schneider Electric	Feed-through terminal block	SCREW TERMINAL, KNIFE DISCONNECT, 2 POINTS, 4MM², GREY	-X 087 06
46.	PXC.3044131	3	Phoenix Contact	UT 6 - Feed-through terminal block	Feed-through terminal block nom. voltage: 1000 V nominal current: 41 A number of connections: 2 connection method: Screw connection Rated cross section: 6 mm2 cross section: 0.2 mm2 - 10 mm2 mounting type: NS 35/7,5, NS 35/15 color: gray	-X 094 04

1	2	3	4	5	6	7	8	9	10	11	12	13	14	15	16	17	18

Cable name: **4LCA201HSS/ 4LCA202HSS-C-01**
Cable type: **U1000R2V** No. of conn., diameter, length: **3G1.5 mm² /**
Remark:

Function text	Page / Column	FROM	Terminal	Conductor	TO	Terminal	Page / Column	Function text
				BN				
				BU				
				GNYE				

Cable name: **4LCA202HSS/ 4LCA301HSS-C-01**
Cable type: **U1000R2V** No. of conn., diameter, length: **3G1.5 mm² /**
Remark:

Function text	Page / Column	FROM	Terminal	Conductor	TO	Terminal	Page / Column	Function text
				BN				
				BU				
				GNYE				

Cable name: **4LCA301HSS/ 4LCA302HSS-C-01**
Cable type: **U1000R2V** No. of conn., diameter, length: **3G1.5 mm² /**
Remark:

Function text	Page / Column	FROM	Terminal	Conductor	TO	Terminal	Page / Column	Function text
				BN				
				BU				
				GNYE				

Cable name: **4LCA302HSS/ 4LCA401HSS-C-01**
Cable type: **U1000R2V** No. of conn., diameter, length: **3G1.5 mm² /**
Remark:

Function text	Page / Column	FROM	Terminal	Conductor	TO	Terminal	Page / Column	Function text
				BN				
				BU				
				GNYE				

Cable name: **4LCA401HSS/ 4LCA402HSS-C-01**
Cable type: **U1000R2V** No. of conn., diameter, length: **3G1.5 mm² /**
Remark:

Function text	Page / Column	FROM	Terminal	Conductor	TO	Terminal	Page / Column	Function text
				BN				
				BU				
				GNYE				

1	2	3	4	5	6	7	8	9	10	11	12	13	14	15	16	17	18

Cable name: **4LCA402HSS/ 4LCA501HSS-C-01**

Cable type: **U1000R2V** | No. of conn., diameter, length: **3G1.5 mm² /**

Remark:

Function text	Page / Column	FROM	Terminal	Conductor	TO	Terminal	Page / Column	Function text
				BN				
				BU				
				GNYE				

Cable name: **4LCA501HSS/ 4LCA502HSS-C-01**

Cable type: **U1000R2V** | No. of conn., diameter, length: **3G1.5 mm² /**

Remark:

Function text	Page / Column	FROM	Terminal	Conductor	TO	Terminal	Page / Column	Function text
				BN				
				BU				
				GNYE				

Cable name: **4LKD001AR/ 4FDR005TD-C-01**

Cable type: **U1000R2V** | No. of conn., diameter, length: **5G1.5 mm² /**

Remark:

Function text	Page / Column	FROM	Terminal	Conductor	TO	Terminal	Page / Column	Function text
[4 FDR 005 TD] OVERBAND MAGNETIC SEPARATOR	=4LKD001AR+4LKD002AR/111.17	=4LKD001AR+4LKD001AR-X 111 04	7:A	**BN**	=4FDR005TD+4FDR005TD-X?	?:A	=4LKD001AR+4LKD002AR/111.17	[4 FDR 005 TD] OVERBAND MAGNETIC SEPARATOR
=	=4LKD001AR+4LKD002AR/111.17	=4LKD001AR+4LKD001AR-X 111 04	8:A	**BK**	=4FDR005TD+4FDR005TD-X?	?:B	=4LKD001AR+4LKD002AR/111.17	=
=	=4LKD001AR+4LKD002AR/111.17	=4LKD001AR+4LKD001AR-X 111 04	9:A	**GY**	=4FDR005TD+4FDR005TD-X?	?:B	=4LKD001AR+4LKD002AR/111.17	=
	=4LKD001AR+4LKD001AR/55.6	=4LKD001AR+4LKD001AR-XS 055 03	2:A	**BU**	=4FES005MO+4FES005MO-X?	?:A	=4LKD001AR+4LKD001AR/55.6	
	=4LKD001AR+4LKD001AR/55.8	=4LKD001AR+4LKD001AR-PE		**GNYE**	=4FES005MO+4FES005MO-PE		=4LKD001AR+4LKD001AR/55.7	

Cable name: **4LKD001AR/ 4LCA003HSS-C-01**

Cable type: **U1000R2V** | No. of conn., diameter, length: **5G1.5 mm² /**

Remark:

Function text	Page / Column	FROM	Terminal	Conductor	TO	Terminal	Page / Column	Function text
	=4LKD001AR+4LKD002AR/111.4	=4LKD001AR+4LKD001AR-X 111 04	1:A	**BN**	=4LCA003HSS+4LCA003HSS-S303	11	=4LKD001AR+4LKD002AR/111.4	
CONTROL ZONE EMERGENCY STOP - GROUND FLOOR MIDDLE	=4LKD001AR+4LKD002AR/111.5	=4LKD001AR+4LKD001AR-X 111 04	3:A	**BK**	=4LCA003HSS+4LCA003HSS-S303	21	=4LKD001AR+4LKD002AR/111.5	
	=4LKD001AR+4LKD002AR/111.4	=4LKD001AR+4LKD001AR-X 111 04	2:A	**GY**	=4LCA003HSS+4LCA003HSS-S303	12	=4LKD001AR+4LKD002AR/111.4	
CONTROL ZONE EMERGENCY STOP - GROUND FLOOR MIDDLE	=4LKD001AR+4LKD002AR/111.5	=4LKD001AR+4LKD001AR-X 111 04	4:A	**BU**	=4LCA003HSS+4LCA003HSS-S303	22	=4LKD001AR+4LKD002AR/111.5	
	=4LKD001AR+4LKD001AR/55.4	=4LKD001AR+4LKD001AR-PE		**GNYE**	=4LCA003HSS+4LCA003HSS-PE		=4LKD001AR+4LKD001AR/55.3	

Cable name: **4LKD001AR/ 4LCA201HSS-C-01**

Cable type: **U1000R2V** | No. of conn., diameter, length: **3G1.5 mm² /**

Remark:

Function text	Page / Column	FROM	Terminal	Conductor	TO	Terminal	Page / Column	Function text
	=4LKD001AR+4LKD002AR/112.4	=4LKD001AR+4LKD001AR-X 112 04	1:A	**BN**	=4LCA201HSS+4LCA201HSS-S303	11	=4LKD001AR+4LKD002AR/112.4	
CONTROL ZONE EMERGENCY STOP - 2nd, 3rd, 4th, 5th FLOOR MIDDLE	=4LKD001AR+4LKD002AR/112.5	=4LKD001AR+4LKD001AR-X 112 04	3:A	**BU**	=4LCA201HSS+4LCA201HSS-S303	21	=4LKD001AR+4LKD002AR/112.5	
	=4LKD001AR+4LKD001AR/55.6	=4LKD001AR+4LKD001AR-PE		**GNYE**	=4LCA201HSS+4LCA201HSS-PE		=4LKD001AR+4LKD001AR/55.5	

1	2	3	4	5	6	7	8	9	10	11	12	13	14	15	16	17	18

Cable name: **4LKD001AR/ 4LCA502HSS-C-01**
Cable type: **U1000R2V** No. of conn., diameter, length: **3G1.5 mm² /**
Remark:

Function text	Page / Column	FROM	Terminal	Conductor	TO	Terminal	Page / Column	Function text
	=4LKD001AR+4LKD002AR/112.4	=4LKD001AR+4LKD001AR-X 112 04	2:A	**BN**	=4LCA502HSS+4LCA502HSS-S303	12	=4LKD001AR+4LKD002AR/112.4	
CONTROL ZONE EMERGENCY STOP - 2nd, 3rd, 4th, 5th FLOOR MIDDLE	=4LKD001AR+4LKD002AR/112.5	=4LKD001AR+4LKD001AR-X 112 04	4:A	**BU**	=4LCA502HSS+4LCA502HSS-S303	22	=4LKD001AR+4LKD002AR/112.5	
	=4LKD001AR+4LKD001AR/55.9	=4LKD001AR+4LKD001AR-PE		**GNYE**	=4LCA502HSS+4LCA502HSS-PE		=4LKD001AR+4LKD001AR/55.8	

Cable name: **4LKD002AR/ 4FDR005TD-B-01**
Cable type: **U1000R2V** No. of conn., diameter, length: **4G2.5 mm² /**
Remark:

Function text	Page / Column	FROM	Terminal	Conductor	TO	Terminal	Page / Column	Function text
[4 FDR 006 MO] OVERBAND MAGNETIC SEPARATOR	=4LKD001AR+4LKD002AR/94.13	=4FDR005TD+4FDR005TD-F??	L1	**BN**	=4LKD001AR+4LKD002AR-X 094 13	1:A	=4LKD001AR+4LKD002AR/94.13	[4 FDR 006 MO] OVERBAND MAGNETIC SEPARATOR
[4 FDR 005 TD] COOLING OIL PUMP AND FAN MOTOR	=4LKD001AR+4LKD002AR/94.14	=4FDR005TD+4FDR005TD-F??	L2	**BK**	=4LKD001AR+4LKD002AR-X 094 13	2:A	=4LKD001AR+4LKD002AR/94.14	[4 FDR 005 TD] COOLING OIL PUMP AND FAN MOTOR
=	=4LKD001AR+4LKD002AR/94.14	=4FDR005TD+4FDR005TD-F??	L3	**GY**	=4LKD001AR+4LKD002AR-X 094 13	3:A	=4LKD001AR+4LKD002AR/94.14	=
	=4LKD001AR+4LKD002AR/94.16	=4LKD001AR+4LKD002AR-PE		**GNYE**	=4FDR005TD+4FDR005TD-F??	PE	=4LKD001AR+4LKD002AR/94.14	=

Cable name: **4LKD002AR/ 4FDR006MO-B-01**
Cable type: **U1000R2V** No. of conn., diameter, length: **4G2.5 mm² /**
Remark:

Function text	Page / Column	FROM	Terminal	Conductor	TO	Terminal	Page / Column	Function text
[4FGO-CR-101] BURNER SYSTEM	=4LKD001AR+4LKD002AR/94.9	=4LKD001AR+4LKD002AR-X 094 09	1:A	**BN**	=4FDR006MO+4FDR006MO-F??	L1	=4LKD001AR+4LKD002AR/94.9	[4FGO-CR-101] BURNER SYSTEM
[4 FDR 006 MO] OVERBAND MAGNETIC SEPARATOR	=4LKD001AR+4LKD002AR/94.9	=4LKD001AR+4LKD002AR-X 094 09	2:A	**BK**	=4FDR006MO+4FDR006MO-F??	L2	=4LKD001AR+4LKD002AR/94.9	[4 FDR 006 MO] OVERBAND MAGNETIC SEPARATOR
=	=4LKD001AR+4LKD002AR/94.10	=4LKD001AR+4LKD002AR-X 094 09	3:A	**GY**	=4FDR006MO+4FDR006MO-F??	L3	=4LKD001AR+4LKD002AR/94.10	=
	=4LKD001AR+4LKD002AR/94.11	=4LKD001AR+4LKD002AR-PE		**GNYE**	=4FDR006MO+4FDR006MO-F??	PE	=4LKD001AR+4LKD002AR/94.10	=

Cable name: **4LKD002AR/ 4FES001TD-C-01**
Cable type: **U1000R2V** No. of conn., diameter, length: **5G1.5 mm² /**
Remark:

Function text	Page / Column	FROM	Terminal	Conductor	TO	Terminal	Page / Column	Function text
TEST FORWARD SAFETY RELAY	=4LKD001AR+4LKD002AR/90.9	=4LKD001AR+4LKD002AR-X 090 09	1:A	**BN**	=4 FES 002 MO+4 FES 001 TD-X1	3	=4LKD001AR+4LKD002AR/90.9	TEST FORWARD SAFETY RELAY
	=4LKD001AR+4LKD002AR/90.9			**BK**	=4LKD001AR+4LKD002AR-X 090 09	4:A	=4LKD001AR+4LKD002AR/90.10	FORWARD
TEST FORWARD SAFETY RELAY	=4LKD001AR+4LKD002AR/90.9	=4LKD001AR+4LKD002AR-X 090 09	2:A	**GY**	=4 FES 002 MO+4 FES 001 TD-X1	8	=4LKD001AR+4LKD002AR/90.9	TEST FORWARD SAFETY RELAY
TEST BACKWARD SAFETY RELAY	=4LKD001AR+4LKD002AR/90.15	=4LKD001AR+4LKD002AR-X 090 09	7:A	**BU**	=4 FES 002 MO+4 FES 001 TD-X1	10	=4LKD001AR+4LKD002AR/90.15	TEST BACKWARD SAFETY RELAY
	=4LKD001AR+4LKD002AR/125.3	=4LKD001AR+4LKD002AR-PE		**GNYE**	=4 FES 002 MO+4 FES 002 MO-PE		=4LKD001AR+4LKD002AR/125.3	

Cable name: **4LKD002AR/ 4FES001TD-C-02**
Cable type: **U1000R2V** No. of conn., diameter, length: **7G1.5 mm² /**
Remark:

Function text	Page / Column	FROM	Terminal	Conductor	TO	Terminal	Page / Column	Function text
READY	=4LKD001AR+4LKD002AR/92.11	=4LKD001AR+4LKD002AR-X 092 06	3:A	**1**	=4 FES 002 MO+4 FES 001 TD-X1	5	=4LKD001AR+4LKD002AR/92.11	READY
=	=4LKD001AR+4LKD002AR/92.11	=4LKD001AR+4LKD002AR-X 092 06	7:A	**2**	=4 FES 002 MO+4 FES 001 TD-X1	6	=4LKD001AR+4LKD002AR/92.11	=
	=4LKD001AR+4LKD002AR/93.4	=4LKD001AR+4LKD002AR-X 092 06	4:B	**3**	=4 FES 002 MO+4 FES 001 TD-X1	11	=4LKD001AR+4LKD002AR/93.4	
SCREW CONVEYOR BELOW ECO - "0" PULSE	=4LKD001AR+4LKD002AR/93.6	=4LKD001AR+4LKD002AR-X 092 06	13:B	**4**	=4 FES 002 MO+4 FES 001 TD-X1	12	=4LKD001AR+4LKD002AR/93.6	SCREW CONVEYOR BELOW ECO - "0" PULSE
	=4LKD001AR+4LKD002AR/125.5	=4LKD001AR+4LKD002AR-XS 125 02	19:A	**5**	=4 FES 002 MO+4 FES 002 MO-X1	?:A	=4LKD001AR+4LKD002AR/125.5	

1	2	3	4	5	6	7	8	9	10	11	12	13	14	15	16	17	18

Cable name: **4LKD002AR/ 4FES001TD-C-02**
Cable type: **U1000R2V** No. of conn., diameter, length: **7G1.5 mm² /**
Remark:

Function text	Page / Column	FROM	Terminal	Conductor	TO	Terminal	Page / Column	Function text
	=4LKD001AR+4LKD002AR/125.6	=4LKD001AR+4LKD002AR-XS 125 02	20:A	**6**	=4 FES 002 MO+4 FES 002 MO-X1	?:A	=4LKD001AR+4LKD002AR/125.6	
	=4LKD001AR+4LKD002AR/125.8	=4LKD001AR+4LKD002AR-PE		**GNYE**	=4 FES 002 MO+4 FES 002 MO-PE		=4LKD001AR+4LKD002AR/125.7	

Cable name: **4LKD002AR/ 4FES002MO-B-01**
Cable type: **U1000R2V** No. of conn., diameter, length: **4G2.5 mm² /**
Remark:

Function text	Page / Column	FROM	Terminal	Conductor	TO	Terminal	Page / Column	Function text
	=4LKD001AR+4LKD002AR/89.5	=4LKD001AR+4LKD002AR-X 089 05	1:A	**BN**	=4 FES 002 MO+4 FES 002 MO-M13	U1	=4LKD001AR+4LKD002AR/89.5	
[4 FES 002 MO] SCREW CONVEYOR BELOW ECO	=4LKD001AR+4LKD002AR/89.5	=4LKD001AR+4LKD002AR-X 089 05	2:A	**BK**	=4 FES 002 MO+4 FES 002 MO-M13	V1	=4LKD001AR+4LKD002AR/89.5	
=	=4LKD001AR+4LKD002AR/89.5	=4LKD001AR+4LKD002AR-X 089 05	3:A	**GY**	=4 FES 002 MO+4 FES 002 MO-M13	W1	=4LKD001AR+4LKD002AR/89.5	
	=4LKD001AR+4LKD002AR/89.7	=4LKD001AR+4LKD002AR-PE		**GNYE**	=4 FES 002 MO+4 FES 002 MO-M13	PE	=4LKD001AR+4LKD002AR/89.5	

Cable name: **4LKD002AR/ 4FES003TD-C-01**
Cable type: **U1000R2V** No. of conn., diameter, length: **5G1.5 mm² /**
Remark:

Function text	Page / Column	FROM	Terminal	Conductor	TO	Terminal	Page / Column	Function text
FORWARD	=4LKD001AR+4LKD002AR/85.9	=4LKD001AR+4LKD002AR-X 085 09	1:A	**BN**	=4 FES 004 MO+4 FES 003 TD-X1	3	=4LKD001AR+4LKD002AR/85.9	FORWARD
=	=4LKD001AR+4LKD002AR/85.9			**BK**	=4LKD001AR+4LKD002AR-X 085 09	4:A	=4LKD001AR+4LKD002AR/85.10	=
=	=4LKD001AR+4LKD002AR/85.9	=4LKD001AR+4LKD002AR-X 085 09	2:A	**GY**	=4 FES 004 MO+4 FES 003 TD-X1	8	=4LKD001AR+4LKD002AR/85.9	=
BACKWARD	=4LKD001AR+4LKD002AR/85.15	=4LKD001AR+4LKD002AR-X 085 09	7:A	**BU**	=4 FES 004 MO+4 FES 003 TD-X1	10	=4LKD001AR+4LKD002AR/85.15	BACKWARD
	=4LKD001AR+4LKD002AR/125.3	=4LKD001AR+4LKD002AR-PE		**GNYE**	=4 FES 004 MO+4 FES 004 MO-PE		=4LKD001AR+4LKD002AR/125.3	

Cable name: **4LKD002AR/ 4FES003TD-C-02**
Cable type: **U1000R2V** No. of conn., diameter, length: **12G1.5 mm² /**
Remark:

Function text	Page / Column	FROM	Terminal	Conductor	TO	Terminal	Page / Column	Function text
READY	=4LKD001AR+4LKD002AR/87.11	=4LKD001AR+4LKD002AR-X 087 06	3:A	**1**	=4 FES 004 MO+4 FES 003 TD-X1	5	=4LKD001AR+4LKD002AR/87.11	READY
=	=4LKD001AR+4LKD002AR/87.11	=4LKD001AR+4LKD002AR-X 087 06	8:A	**2**	=4 FES 004 MO+4 FES 003 TD-X1	6	=4LKD001AR+4LKD002AR/87.11	=
	=4LKD001AR+4LKD002AR/88.4	=4LKD001AR+4LKD002AR-X 087 06	4:B	**3**	=4 FES 004 MO+4 FES 003 TD-X1	11:A	=4LKD001AR+4LKD002AR/88.4	
MAIN CLOSED CHAIN CONVEYOR - "0" PULSE	=4LKD001AR+4LKD002AR/88.6	=4LKD001AR+4LKD002AR-X 087 06	14:B	**4**	=4 FES 004 MO+4 FES 003 TD-X1	12:A	=4LKD001AR+4LKD002AR/88.6	MAIN CLOSED CHAIN CONVEYOR - "0" PULSE
=	=4LKD001AR+4LKD002AR/88.8	=4LKD001AR+4LKD002AR-X 087 06	5:B	**5**	=4 FES 004 MO+4 FES 003 TD-X1	13:A	=4LKD001AR+4LKD002AR/88.8	=
MAIN CLOSED CHAIN CONVEYOR - BLOCKAGE DETECTION	=4LKD001AR+4LKD002AR/88.9	=4LKD001AR+4LKD002AR-X 087 06	15:B	**6**	=4 FES 004 MO+4 FES 003 TD-X1	14:A	=4LKD001AR+4LKD002AR/88.9	MAIN CLOSED CHAIN CONVEYOR - BLOCKAGE DETECTION
	=4LKD001AR+4LKD002AR/125.5	=4LKD001AR+4LKD002AR-XS 125 02	14:A	**7**	=4 FES 004 MO+4 FES 004 MO-X1	?:A	=4LKD001AR+4LKD002AR/125.5	
	=4LKD001AR+4LKD002AR/125.6	=4LKD001AR+4LKD002AR-XS 125 02	15:A	**8**	=4 FES 004 MO+4 FES 004 MO-X1	?:A	=4LKD001AR+4LKD002AR/125.6	
	=4LKD001AR+4LKD002AR/125.7	=4LKD001AR+4LKD002AR-XS 125 02	16:A	**9**	=4 FES 004 MO+4 FES 004 MO-X1	?:A	=4LKD001AR+4LKD002AR/125.7	
	=4LKD001AR+4LKD002AR/125.8	=4LKD001AR+4LKD002AR-XS 125 02	17:A	**10**	=4 FES 004 MO+4 FES 004 MO-X1	?:A	=4LKD001AR+4LKD002AR/125.8	
	=4LKD001AR+4LKD002AR/125.9	=4LKD001AR+4LKD002AR-XS 125 02	18:A	**11**	=4 FES 004 MO+4 FES 004 MO-X1	?:A	=4LKD001AR+4LKD002AR/125.9	
	=4LKD001AR+4LKD002AR/125.10	=4LKD001AR+4LKD002AR-PE		**GNYE**	=4 FES 004 MO+4 FES 004 MO-PE		=4LKD001AR+4LKD002AR/125.10	

1	2	3	4	5	6	7	8	9	10	11	12	13	14	15	16	17	18

Cable name: **4LKD002AR/ 4FES004MO-B-01**

Cable type: **U1000R2V** No. of conn., diameter, length: **4G2.5 mm² /**

Remark:

Function text	Page / Column	FROM	Terminal	Conductor	TO	Terminal	Page / Column	Function text
	=4LKD001AR+4LKD002AR/84.5	=4LKD001AR+4LKD002AR-X 084 05	1:A	**BN**	=4 FES 004 MO+4 FES 004 MO-M12	U1	=4LKD001AR+4LKD002AR/84.5	
[4FES004MO] MAIN CLOSED CHAIN CONVEYOR	=4LKD001AR+4LKD002AR/84.5	=4LKD001AR+4LKD002AR-X 084 05	2:A	**BK**	=4 FES 004 MO+4 FES 004 MO-M12	V1	=4LKD001AR+4LKD002AR/84.5	
=	=4LKD001AR+4LKD002AR/84.5	=4LKD001AR+4LKD002AR-X 084 05	3:A	**GY**	=4 FES 004 MO+4 FES 004 MO-M12	W1	=4LKD001AR+4LKD002AR/84.5	
	=4LKD001AR+4LKD002AR/84.7	=4LKD001AR+4LKD002AR-PE		**GNYE**	=4 FES 004 MO+4 FES 004 MO-M12	PE	=4LKD001AR+4LKD002AR/84.5	

Cable name: **4LKD002AR/ 4FES100BC-B-01**

Cable type: **U1000R2V** No. of conn., diameter, length: **4G6 mm² /**

Remark:

Function text	Page / Column	FROM	Terminal	Conductor	TO	Terminal	Page / Column	Function text
SPARE [4 SAR 200 BC] PNEUMATIC RAPPING SYSTEM U podlogama samo 1f traže u ormaru, zrak iz kompresora	=4LKD001AR+4LKD002AR/95.9	=4LKD001AR+4LKD002AR-X 095 09	1:A	**BN**	=4FES100BC+4FES100BC-F??	L1	=4LKD001AR+4LKD002AR/95.9	SPARE [4 SAR 200 BC] PNEUMATIC RAPPING SYSTEM U podlogama samo 1f traže u ormaru, zrak iz kompresora
[4 FES 100 BC] WATER SPRAYING SYSTEM	=4LKD001AR+4LKD002AR/95.9	=4LKD001AR+4LKD002AR-X 095 09	2:A	**BK**	=4FES100BC+4FES100BC-F??	L2	=4LKD001AR+4LKD002AR/95.9	[4 FES 100 BC] WATER SPRAYING SYSTEM
=	=4LKD001AR+4LKD002AR/95.10	=4LKD001AR+4LKD002AR-X 095 09	3:A	**GY**	=4FES100BC+4FES100BC-F??	L3	=4LKD001AR+4LKD002AR/95.10	=
	=4LKD001AR+4LKD002AR/95.11	=4LKD001AR+4LKD002AR-PE		**GNYE**	=4FES100BC+4FES100BC-F??	PE	=4LKD001AR+4LKD002AR/95.10	=

Cable name: **4LKD002AR/ 4FGO CR 101-B-01**

Cable type: **U1000R2V** No. of conn., diameter, length: **4G6 mm² /**

Remark:

Function text	Page / Column	FROM	Terminal	Conductor	TO	Terminal	Page / Column	Function text
	=4LKD001AR+4LKD002AR/94.4	=4LKD001AR+4LKD002AR-X 094 04	1:A	**BN**	=4FGO-CR-101+4FGO-CR-101-F??	L1	=4LKD001AR+4LKD002AR/94.4	
[4FGO-CR-101] BURNER SYSTEM	=4LKD001AR+4LKD002AR/94.4	=4LKD001AR+4LKD002AR-X 094 04	2:A	**BK**	=4FGO-CR-101+4FGO-CR-101-F??	L2	=4LKD001AR+4LKD002AR/94.4	[4FGO-CR-101] BURNER SYSTEM
=	=4LKD001AR+4LKD002AR/94.5	=4LKD001AR+4LKD002AR-X 094 04	3:A	**GY**	=4FGO-CR-101+4FGO-CR-101-F??	L3	=4LKD001AR+4LKD002AR/94.5	=
	=4LKD001AR+4LKD002AR/94.6	=4LKD001AR+4LKD002AR-PE		**GNYE**	=4FGO-CR-101+4FGO-CR-101-F??	PE	=4LKD001AR+4LKD002AR/94.5	=

Cable name: **4LKF002AR/ 4LCA004HSS-C-01**

Cable type: **U1000R2V** No. of conn., diameter, length: **5G1.5 mm² /**

Remark:

Function text	Page / Column	FROM	Terminal	Conductor	TO	Terminal	Page / Column	Function text
	=4LKD001AR+4LKD002AR/117.4	=4LKD001AR+4LKD001AR-X 117 04	1:A	**BN**	=4LCA004HSS+4LCA004HSS-S303	11	=4LKD001AR+4LKD002AR/117.4	
CONTROL ZONE EMERGENCY STOP - GROUND FLOOR TURBINE SIDE	=4LKD001AR+4LKD002AR/117.5	=4LKD001AR+4LKD001AR-X 117 04	3:A	**BK**	=4LCA004HSS+4LCA004HSS-S303	21	=4LKD001AR+4LKD002AR/117.5	
	=4LKD001AR+4LKD002AR/117.4	=4LKD001AR+4LKD001AR-X 117 04	2:A	**GY**	=4LCA004HSS+4LCA004HSS-S303	12	=4LKD001AR+4LKD002AR/117.4	
CONTROL ZONE EMERGENCY STOP - GROUND FLOOR TURBINE SIDE	=4LKD001AR+4LKD002AR/117.5	=4LKD001AR+4LKD001AR-X 117 04	4:A	**BU**	=4LCA004HSS+4LCA004HSS-S303	22	=4LKD001AR+4LKD002AR/117.5	
	=4LKD001AR+4LKD002AR/125.11	=4LKD001AR+4LKD002AR-PE		**GNYE**	=4LCA004HSS+4LCA004HSS-PE		=4LKD001AR+4LKD002AR/125.10	

Terminal diagram

Strip

=4LKD001AR+4LKD002AR-X 081 05

A SIDE							B SIDE
Placement	Target designation	Cable name and type	Conductor	Jumper		Wiring	Target designation
				'	1	BK 16 mm²	-KM 081 05:2/T1
				'	2	BK 16 mm²	-KM 081 05:4/T2
				'	3	BK 16 mm²	-KM 081 05:6/T3

Date:	17.03.2026.	SINTAKSA A Voith Company	Client:	ANDRITZ TEP d.o.o. Ulica 108. brigade ZNG 84, 35000 Slavonski Brod, Croatia	Scope: BOILER/LOW VOLTAGE CABINET BOILER (NORMAL) 2	Project: BRC-4	Unit & Issuer: ATEP0	Number: 1874	Revision: G
Drawn:	Luka Božičević								#Y
Approved:	Grga Kolić		Object:	RDF Albioma Les Bois Rouge Reunion - France	Content: Terminal diagram =4LKD001AR+4LKD002AR-X 081 05	Drawing designation: BRC-4-ATEP0-1874-G			=4LKD001AR
Format:	A3								+4LKD002AR

Sheet: 601

Next: 602

Terminal diagram

Strip

=4LKD001AR+4LKD002AR-X 082 08

A SIDE						B SIDE
Placement	Target designation	Cable name and type	Conductor	Jumper	Wiring	Target designation
					WH 1 mm²	-Q 081 05:21
					WH 1 mm²	-K 082 16:11
					WH 1 mm²	-KM 081 05:74
					WH 1 mm²	-KM 081 05:73
					WH 1 mm²	-S 082 06.1:23

Date:	17.03.2026.	SINTAKSA A Voith Company	Client:	ANDRITZ TEP d.o.o. Ulica 108. brigade ZNG 84, 35000 Slavonski Brod, Croatia	Scope: BOILER/LOW VOLTAGE CABINET BOILER (NORMAL) 2	Project: BRC-4	Unit & Issuer: ATEP0	Number: 1874	Revision: G
Drawn:	Luka Božičević								#Y
Approved:	Grga Kolić		Object:	RDF Albioma Les Bois Rouge Reunion - France	Content: Terminal diagram =4LKD001AR+4LKD002AR-X 082 08	Drawing designation: BRC-4-ATEP0-1874-G			=4LKD001AR
Format:	A3								+4LKD002AR

Sheet: 602

Next: 603

Terminal diagram

Strip

=4LKD001AR+4LKD002AR-X 083 06

A SIDE						B SIDE
Placement	Target designation	Cable name and type	Conductor	Jumper	Wiring	Target designation
				1		
				2	RD 1 mm²	-KM 081 05:83
/83.10	=??+??-S:31			3		
				4		
				5	RD 1 mm²	-KM 081 05:84
/83.10	=??+??-S:32			6	RD 1 mm²	-K 082 16:21
				7	RD 1 mm²	-S 082 06.1:34
				8		
				9		

Date:	17.03.2026.	SINTAKSA A Voith Company	Client:	ANDRITZ TEP d.o.o. Ulica 108. brigade ZNG 84, 35000 Slavonski Brod, Croatia	Scope: BOILER/LOW VOLTAGE CABINET BOILER (NORMAL) 2	Project: BRC-4	Unit & Issuer: ATEP0	Number: 1874	Revision: G
Drawn:	Luka Božičević								#Y
Approved:	Grga Kolić		Object:	RDF Albioma Les Bois Rouge Reunion - France	Content: Terminal diagram =4LKD001AR+4LKD002AR-X 083 06	Drawing designation: BRC-4-ATEP0-1874-G			=4LKD001AR
Format:	A3								+4LKD002AR

Sheet: 603

Next: 604

Terminal diagram

Strip

=4LKD001AR+4LKD002AR-X 084 05

A SIDE								B SIDE
Placement	Target designation	Cable name and type	Conductor	Jumper		Wiring	Target designation	
/84.5	=4 FES 004 MO+4 FES 004 MO-M12:U1	4LKD002AR/ 4FES004MO-B-01 U1000R2V 4G2.5 mm²	BN 2.5 mm²	'	1	BK 2.5 mm²	-KM 084 05:2/T1	
/84.5	=4 FES 004 MO+4 FES 004 MO-M12:V1	4LKD002AR/ 4FES004MO-B-01 U1000R2V 4G2.5 mm²	BK 2.5 mm²	'	2	BK 2.5 mm²	-KM 084 05:4/T2	
/84.5	=4 FES 004 MO+4 FES 004 MO-M12:W1	4LKD002AR/ 4FES004MO-B-01 U1000R2V 4G2.5 mm²	GY 2.5 mm²	'	3	BK 2.5 mm²	-KM 084 05:6/T3	

Date:	17.03.2026.	SINTAKSA A Voith Company	Client:	ANDRITZ TEP d.o.o. Ulica 108. brigade ZNG 84, 35000 Slavonski Brod, Croatia	Scope: BOILER/LOW VOLTAGE CABINET BOILER (NORMAL) 2	Project: BRC-4	Unit & Issuer: ATEP0	Number: 1874	Revision: G
Drawn:	Luka Božičević								#Y
Approved:	Grga Kolić		Object:	RDF Albioma Les Bois Rouge Reunion - France	Content: Terminal diagram =4LKD001AR+4LKD002AR-X 084 05	Drawing designation: BRC-4-ATEP0-1874-G			=4LKD001AR
Format:	A3								+4LKD002AR

Sheet: 604

Next: 605

Terminal diagram

Strip

=4LKD001AR+4LKD002AR-X 085 09

A SIDE						B SIDE
Placement	Target designation	Cable name and type	Conductor	Jumper	Wiring	Target designation
/85.9	=4 FES 004 MO+4 FES 004 MO-X1:3	4LKD002AR/ 4FES004MO-C-01 U1000R2V 5G1.5 mm²	BN 1.5 mm²		WH 1 mm²	-Q 084 05:21
/85.9	=4 FES 004 MO+4 FES 004 MO-X1:8	4LKD002AR/ 4FES004MO-C-01 U1000R2V 5G1.5 mm²	GY 1.5 mm²		WH 1 mm²	-K 086 10:11
					WH 1 mm²	-KM 084 05:74
/85.9		4LKD002AR/ 4FES004MO-C-01 U1000R2V 5G1.5 mm²	BK 1.5 mm²		WH 1 mm²	-KM 084 05:73
					WH 1 mm²	-KM 084 07:73
					WH 1 mm²	-S 085 07.1:23
/85.15	=4 FES 004 MO+4 FES 004 MO-X1:10	4LKD002AR/ 4FES004MO-C-01 U1000R2V 5G1.5 mm²	BU 1.5 mm²		WH 1 mm²	-K 086 10:21
					WH 1 mm²	-S 085 07.1:43

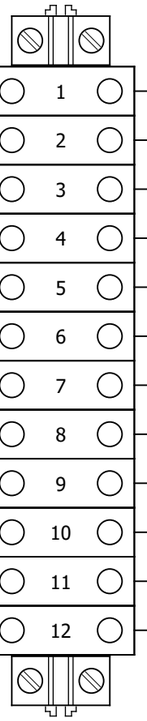

Date:	17.03.2026.	SINTAKSA A Voith Company	Client:	ANDRITZ TEP d.o.o. Ulica 108. brigade ZNG 84, 35000 Slavonski Brod, Croatia	Scope: BOILER/LOW VOLTAGE CABINET BOILER (NORMAL) 2	Project: BRC-4	Unit & Issuer: ATEP0	Number: 1874	Revision: G
Drawn:	Luka Božičević								#Y
Approved:	Grga Kolić		Object:	RDF Albioma Les Bois Rouge Reunion - France	Content: Terminal diagram =4LKD001AR+4LKD002AR-X 085 09	Drawing designation: BRC-4-ATEP0-1874-G			=4LKD001AR
Format:	A3								+4LKD002AR

Sheet: 605

Next: 606

Terminal diagram

Strip

=4LKD001AR+4LKD002AR-X 087 06

A SIDE Placement	A SIDE Target designation	Cable name and type	Conductor	Jumper	Strip	Wiring	B SIDE Target designation
					1		
					2	RD 1 mm²	-KM 084 05:83
						RD 1 mm²	-KM 084 07:83
/87.11	=4 FES 004 MO+4 FES 004 MO-X1:5	4LKD002AR/ 4FES004MO-C-02 U1000R2V 12G1.5 mm²	1 1.5 mm²		3		
					4	3 1.5 mm²	=4 FES 004 MO+4 FES 004
					5	5 1.5 mm²	=4 FES 004 MO+4 FES 004
					6	RD 1 mm²	-KM 084 05:84
					7	RD 1 mm²	-KM 084 07:84
/87.11	=4 FES 004 MO+4 FES 004 MO-X1:6	4LKD002AR/ 4FES004MO-C-02 U1000R2V 12G1.5 mm²	2 1.5 mm²		8	RD 1 mm²	-K 086 10:31
					9	RD 1 mm²	-S 085 07.1:54
					10		
					11		
					12		
					13		
					14	4 1.5 mm²	=4 FES 004 MO+4 FES 004
					15	6 1.5 mm²	=4 FES 004 MO+4 FES 004
					16		
					17		
					18		

Date:	17.03.2026.	SINTAKSA A Voith Company	Client:	ANDRITZ TEP d.o.o. Ulica 108. brigade ZNG 84, 35000 Slavonski Brod, Croatia	Scope: BOILER/LOW VOLTAGE CABINET BOILER (NORMAL) 2	Project: BRC-4	Unit & Issuer: ATEP0	Number: 1874	Revision: G
Drawn:	Luka Božičević								#Y
Approved:	Grga Kolić		Object:	RDF Albioma Les Bois Rouge Reunion - France	Content: Terminal diagram =4LKD001AR+4LKD002AR-X 087 06	Drawing designation: BRC-4-ATEP0-1874-G		=4LKD001AR	Sheet: 606
Format:	A3							+4LKD002AR	Next: 607

Terminal diagram

Strip

=4LKD001AR+4LKD002AR-X 089 05

A SIDE								B SIDE
Placement	Target designation	Cable name and type	Conductor	Jumper		Wiring	Target designation
/89.5	=4 FES 002 MO+4 FES 002 MO-M13:U1	4LKD002AR/ 4FES002MO-B-01 U1000R2V 4G2.5 mm²	BN 2.5 mm²	'	1	BK 2.5 mm²	-KM 089 05:2/T1
/89.5	=4 FES 002 MO+4 FES 002 MO-M13:V1	4LKD002AR/ 4FES002MO-B-01 U1000R2V 4G2.5 mm²	BK 2.5 mm²	'	2	BK 2.5 mm²	-KM 089 05:4/T2
/89.5	=4 FES 002 MO+4 FES 002 MO-M13:W1	4LKD002AR/ 4FES002MO-B-01 U1000R2V 4G2.5 mm²	GY 2.5 mm²	'	3	BK 2.5 mm²	-KM 089 05:6/T3

Terminal diagram

Strip

=4LKD001AR+4LKD002AR-X 090 09

A SIDE								B SIDE
Placement	Target designation	Cable name and type	Conductor	Jumper		Wiring	Target designation
/90.9	=4 FES 002 MO+4 FES 002 MO-X1:3	4LKD002AR/ 4FES002MO-C-01 U1000R2V 5G1.5 mm²	BN 1.5 mm²		1	WH 1 mm²	-Q 089 05:21
/90.9	=4 FES 002 MO+4 FES 002 MO-X1:8	4LKD002AR/ 4FES002MO-C-01 U1000R2V 5G1.5 mm²	GY 1.5 mm²		2	WH 1 mm²	-K 091 10:11
					3	WH 1 mm²	-KM 089 05:74
/90.9		4LKD002AR/ 4FES002MO-C-01 U1000R2V 5G1.5 mm²	BK 1.5 mm²		4	WH 1 mm²	-KM 089 05:73
					5	WH 1 mm²	-KM 089 07:73
					6	WH 1 mm²	-S 090 07.1:23
/90.15	=4 FES 002 MO+4 FES 002 MO-X1:10	4LKD002AR/ 4FES002MO-C-01 U1000R2V 5G1.5 mm²	BU 1.5 mm²		7	WH 1 mm²	-K 091 10:21
					8		
					9		
					10	WH 1 mm²	-S 090 07.1:43
					11		
					12		

Date:	17.03.2026.	SINTAKSA A Voith Company	Client:	ANDRITZ TEP d.o.o. Ulica 108. brigade ZNG 84, 35000 Slavonski Brod, Croatia	Scope: BOILER/LOW VOLTAGE CABINET BOILER (NORMAL) 2	Project: BRC-4	Unit & Issuer: ATEP0	Number: 1874	Revision: G
Drawn:	Luka Božičević								#Y
Approved:	Grga Kolić		Object:	RDF Albioma Les Bois Rouge Reunion - France	Content: Terminal diagram =4LKD001AR+4LKD002AR-X 090 09	Drawing designation: BRC-4-ATEP0-1874-G		=4LKD001AR	Sheet: 608
Format:	A3							+4LKD002AR	Next: 609

Terminal diagram

Strip

=4LKD001AR+4LKD002AR-X 092 06

A SIDE						B SIDE
Placement	Target designation	Cable name and type	Conductor	Jumper	Wiring	Target designation
				1		
				2	RD 1 mm²	-KM 089 05:83
/92.11	=4 FES 002 MO+4 FES 002 MO-X1:5	4LKD002AR/ 4FES002MO-C-02 U1000R2V 7G1.5 mm²	1 1.5 mm²	3		
				4	3 1.5 mm²	=4 FES 002 MO+4 FES 002
				5	RD 1 mm²	-KM 089 05:84
				6	RD 1 mm²	-KM 089 07:84
/92.11	=4 FES 002 MO+4 FES 002 MO-X1:6	4LKD002AR/ 4FES002MO-C-02 U1000R2V 7G1.5 mm²	2 1.5 mm²	7	RD 1 mm²	-K 091 10:31
				8	RD 1 mm²	-S 090 07.1:54
				9		
				10		
				11		
				12		
				13	4 1.5 mm²	=4 FES 002 MO+4 FES 002
				14		
				15		
				16		

Date:	17.03.2026.	SINTAKSA A Voith Company	Client: ANDRITZ TEP d.o.o. Ulica 108. brigade ZNG 84, 35000 Slavonski Brod, Croatia	Scope: BOILER/LOW VOLTAGE CABINET BOILER (NORMAL) 2	Project: BRC-4	Unit & Issuer: ATEP0	Number: 1874	Revision: G
Drawn:	Luka Božičević							#Y
Approved:	Grga Kolić		Object: RDF Albioma Les Bois Rouge Reunion - France	Content: Terminal diagram =4LKD001AR+4LKD002AR-X 092 06	Drawing designation: BRC-4-ATEP0-1874-G			=4LKD001AR
Format:	A3							+4LKD002AR

Sheet: 609
Next: 610

Terminal diagram

Strip

=4LKD001AR+4LKD002AR-X 094 04

A SIDE								B SIDE
Placement	Target designation	Cable name and type	Conductor	Jumper		Wiring	Target designation
/94.4	=4FGO-CR-101+4FGO-CR-101-F??:L1	4LKD002AR/ 4FGO CR 101-B-01 U1000R2V 4G6 mm²	BN 6 mm²	'	1	BK 6 mm²	-Q 094 04:2
/94.4	=4FGO-CR-101+4FGO-CR-101-F??:L2	4LKD002AR/ 4FGO CR 101-B-01 U1000R2V 4G6 mm²	BK 6 mm²	'	2	BK 6 mm²	-Q 094 04:4
/94.5	=4FGO-CR-101+4FGO-CR-101-F??:L3	4LKD002AR/ 4FGO CR 101-B-01 U1000R2V 4G6 mm²	GY 6 mm²	'	3	BK 6 mm²	-Q 094 04:6

Terminal diagram

Strip

=4LKD001AR+4LKD002AR-X 094 09

A SIDE								B SIDE
Placement	Target designation	Cable name and type	Conductor	Jumper		Wiring	Target designation
/94.9	=4FES005MO+4FES005MO-F??:L1	4LKD002AR/ 4FES005MO-B-01 U1000R2V 4G2.5 mm²	BN 2.5 mm²	'	1	BK 2.5 mm²	-Q 094 09:2
/94.9	=4FES005MO+4FES005MO-F??:L2	4LKD002AR/ 4FES005MO-B-01 U1000R2V 4G2.5 mm²	BK 2.5 mm²	'	2	BK 2.5 mm²	-Q 094 09:4
/94.10	=4FES005MO+4FES005MO-F??:L3	4LKD002AR/ 4FES005MO-B-01 U1000R2V 4G2.5 mm²	GY 2.5 mm²	'	3	BK 2.5 mm²	-Q 094 09:6

Terminal diagram

Strip

=4LKD001AR+4LKD002AR-X 094 13

A SIDE								B SIDE
Placement	Target designation	Cable name and type	Conductor	Jumper		Wiring	Target designation
/94.13	=4FDR005BJ+4FDR005BJ-F??:L1	4LKD002AR/ 4FDR005BJ-B-01 U1000R2V 4G2.5 mm²	BN 2.5 mm²	'	1	BK 2.5 mm²	-Q 094 13:2
/94.14	=4FDR005BJ+4FDR005BJ-F??:L2	4LKD002AR/ 4FDR005BJ-B-01 U1000R2V 4G2.5 mm²	BK 2.5 mm²	'	2	BK 2.5 mm²	-Q 094 13:4
/94.14	=4FDR005BJ+4FDR005BJ-F??:L3	4LKD002AR/ 4FDR005BJ-B-01 U1000R2V 4G2.5 mm²	GY 2.5 mm²	'	3	BK 2.5 mm²	-Q 094 13:6

Terminal diagram

Strip

=4LKD001AR+4LKD002AR-X 095 04

A SIDE								B SIDE
Placement	Target designation	Cable name and type	Conductor	Jumper		Wiring	Target designation
/95.4	=4SAR200BC+4SAR200BC-F??:L1	4LKD002AR/ 4SAR200BC-B-01 U1000R2V 4G2.5 mm²	BN 2.5 mm²	'	1	BK 2.5 mm²	-Q 095 04:2
/95.4	=4SAR200BC+4SAR200BC-F??:L2	4LKD002AR/ 4SAR200BC-B-01 U1000R2V 4G2.5 mm²	BK 2.5 mm²	'	2	BK 2.5 mm²	-Q 095 04:4
/95.5	=4SAR200BC+4SAR200BC-F??:L3	4LKD002AR/ 4SAR200BC-B-01 U1000R2V 4G2.5 mm²	GY 2.5 mm²	'	3	BK 2.5 mm²	-Q 095 04:6

Terminal diagram

Strip

=4LKD001AR+4LKD002AR-X 095 09

A SIDE								B SIDE
Placement	Target designation	Cable name and type	Conductor	Jumper		Wiring	Target designation	
/95.9	=4FES100BC+4FES100BC-F??:L1	4LKD002AR/ 4FES100BC-B-01 U1000R2V 4G2.5 mm²	BN 2.5 mm²	'	1	BK 2.5 mm²	-Q 095 09:2	
/95.9	=4FES100BC+4FES100BC-F??:L2	4LKD002AR/ 4FES100BC-B-01 U1000R2V 4G2.5 mm²	BK 2.5 mm²	'	2	BK 2.5 mm²	-Q 095 09:4	
/95.10	=4FES100BC+4FES100BC-F??:L3	4LKD002AR/ 4FES100BC-B-01 U1000R2V 4G2.5 mm²	GY 2.5 mm²	'	3	BK 2.5 mm²	-Q 095 09:6	

Date:	17.03.2026.	SINTAKSA A Voith Company	Client:	ANDRITZ TEP d.o.o. Ulica 108. brigade ZNG 84, 35000 Slavonski Brod, Croatia	Scope: BOILER/LOW VOLTAGE CABINET BOILER (NORMAL) 2	Project: BRC-4	Unit & Issuer: ATEP0	Number: 1874	Revision: G
Drawn:	Luka Božičević								#Y
Approved:	Grga Kolić		Object:	RDF Albioma Les Bois Rouge Reunion - France	Content: Terminal diagram =4LKD001AR+4LKD002AR-X 095 09	Drawing designation: BRC-4-ATEP0-1874-G			=4LKD001AR
Format:	A3								+4LKD002AR

Sheet: 614

Next: 615

Terminal diagram

Strip

=4LKD001AR+4LKD002AR-XB 096 03

A SIDE						B SIDE
Placement	Target designation	Cable name and type	Conductor	Jumper	Wiring	Target designation
+4LKD001AR/41.4	+4LKD001AR-HL 041 04:2		GY 1 mm²	1	GY 1 mm²	-RP 082 05:A2
					GY 1 mm²	-Q 082 04:4
				2	GY 1 mm²	-RP 085 12:A2
				3	GY 1 mm²	-RP 090 11:A2
				4		
				5		
+4LKD003AR/189.3	+4LKD003AR-XB 189 03:1:A		GY 1 mm²	6		

Date:	17.03.2026.	SINTAKSA A Voith Company	Client:	ANDRITZ TEP d.o.o. Ulica 108. brigade ZNG 84, 35000 Slavonski Brod, Croatia	Scope: BOILER/LOW VOLTAGE CABINET BOILER (NORMAL) 2	Project: BRC-4	Unit & Issuer: ATEP0	Number: 1874	Revision: G
Drawn:	Luka Božičević								#Y
Approved:	Grga Kolić		Object:	RDF Albioma Les Bois Rouge Reunion - France	Content: Terminal diagram =4LKD001AR+4LKD002AR-XB 096 03	Drawing designation: BRC-4-ATEP0-1874-G			=4LKD001AR
Format:	A3								+4LKD002AR

Sheet: 615

Next: 616

Terminal diagram

Strip

=4LKD001AR+4LKD002AR-XS 121 03

A SIDE						B SIDE
Placement	Target designation	Cable name and type	Conductor	Jumper	Wiring	Target designation
				1		
				2	RD 1 mm²	-QB 080 09:11
				3	RD 1 mm²	-Q 094 04:11
				4		
				5	RD 1 mm²	-QB 080 09:14
				6	RD 1 mm²	-Q 094 04:14
				7	RD 1 mm²	-Q 094 09:14
				8	RD 1 mm²	-Q 094 13:14
				9	RD 1 mm²	-Q 095 04:14
				10	RD 1 mm²	-Q 095 09:14
				11		
				12		
				13		
				14		
				15		

Date:	17.03.2026.	SINTAKSA A Voith Company	Client:	ANDRITZ TEP d.o.o. Ulica 108. brigade ZNG 84, 35000 Slavonski Brod, Croatia	Scope: BOILER/LOW VOLTAGE CABINET BOILER (NORMAL) 2	Project: BRC-4	Unit & Issuer: ATEP0	Number: 1874	Revision: G
Drawn:	Luka Božičević								#Y
Approved:	Grga Kolić		Object:	RDF Albioma Les Bois Rouge Reunion - France	Content: Terminal diagram =4LKD001AR+4LKD002AR-XS 121 03	Drawing designation: BRC-4-ATEP0-1874-G			=4LKD001AR
Format:	A3								+4LKD002AR

Sheet: 616

Next: 617

Terminal diagram

Strip

=4LKD001AR+4LKD002AR-XS 125 02

A SIDE						B SIDE
Placement	Target designation	Cable name and type	Conductor	Jumper	Wiring	Target designation
				1	GNYE 2.5 mm²	-PE
				2		
				3		
				4		
				5		
				6		
				7		
				8		
				9		
				10		
				11		
				12		
				13		
/125.5	=4 FES 004 MO+4 FES 004 MO-X1:?:A	4LKD002AR/ 4FES004MO-C-02 U1000R2V 12G1.5 mm²	7 1.5 mm²	14		
/125.6	=4 FES 004 MO+4 FES 004 MO-X1:?:A	4LKD002AR/ 4FES004MO-C-02 U1000R2V 12G1.5 mm²	8 1.5 mm²	15		
/125.7	=4 FES 004 MO+4 FES 004 MO-X1:?:A	4LKD002AR/ 4FES004MO-C-02 U1000R2V 12G1.5 mm²	9 1.5 mm²	16		
/125.8	=4 FES 004 MO+4 FES 004 MO-X1:?:A	4LKD002AR/ 4FES004MO-C-02 U1000R2V 12G1.5 mm²	10 1.5 mm²	17		
/125.9	=4 FES 004 MO+4 FES 004 MO-X1:?:A	4LKD002AR/ 4FES004MO-C-02 U1000R2V 12G1.5 mm²	11 1.5 mm²	18		
/125.5	=4 FES 002 MO+4 FES 002 MO-X1:?:A	4LKD002AR/ 4FES002MO-C-02 U1000R2V 7G1.5 mm²	5 1.5 mm²	19		
/125.6	=4 FES 002 MO+4 FES 002 MO-X1:?:A	4LKD002AR/ 4FES002MO-C-02 U1000R2V 7G1.5 mm²	6 1.5 mm²	20		
				21		
				22		
				23		
				24		
				25		

Terminal diagram

Strip

=4LKD001AR+4LKD002AR-XS 125 02

A SIDE						B SIDE
Placement	Target designation	Cable name and type	Conductor	Jumper	Wiring	Target designation
				26		
				27		
				28		
				29		
				30		

Date:	17.03.2026.	SINTAKSA A Voith Company	Client:	ANDRITZ TEP d.o.o. Ulica 108. brigade ZNG 84, 35000 Slavonski Brod, Croatia	Scope: BOILER/LOW VOLTAGE CABINET BOILER (NORMAL) 2	Project: BRC-4	Unit & Issuer: ATEP0	Number: 1874	Revision: G
Drawn:	Luka Božičević								#Y
Approved:	Grga Kolić		Object:	RDF Albioma Les Bois Rouge Reunion - France	Content: Terminal diagram =4LKD001AR+4LKD002AR-XS 125 02	Drawing designation: BRC-4-ATEP0-1874-G			=4LKD001AR
Format:	A3								+4LKD002AR

Sheet: 618

Next: +4LKD003AR/1

SINTAKSA
A Voith Company

Ulica Domovinskog rata 104C,
21 000 Split, Hrvatska / Croatia
OIB: 32357958120
T: +385 1 2310 273
www.sintaksa.hr

SCHÉMA DE CÂBLAGE ÉLECTRIQUE

Projet / tâche:

RDF Albioma Les Bois Rouge
Reunion - France

Client / acheteur:

ANDRITZ TEP d.o.o.
Ulica 108. brigade ZNG 84, 35000
Slavonski Brod, Croatia

Cadre:

BOILER/LOW VOLTAGE
CABINET BOILER (NORMAL)
3
+4LKD003AR

Code du document:

BRC-4-ATEP0-1874-G

Date:
17.03.2026.

Date:	17.03.2026.	SINTAKSA A Voith Company	Client:	ANDRITZ TEP d.o.o. Ulica 108. brigade ZNG 84, 35000 Slavonski Brod, Croatia	Scope: BOILER/LOW VOLTAGE CABINET BOILER (NORMAL) 3	Project: BRC-4	Unit & Issuer: ATEP0	Number: 1874	Revision: G	
Drawn:	Luka Božičević									#A
Approved:	Grga Kolić		Object:	RDF Albioma Les Bois Rouge Reunion - France	Content: TITLE PAGE	Drawing designation: BRC-4-ATEP0-1874-G			=4LKD001AR	Sheet: 1
Format:	A3								+4LKD003AR	Next: 2

Table of contents

Page number	Page description	Remarks of creator	Date	Checked by	Revision
2	TABLE OF CONTENTS		2026/06/17		
3	TABLE OF CONTENTS		2026/06/17		
161	400VAC DISTRIBUTION		2026/05/27		G
162	BELT CONVEYOR FOR BOTTOM ASH		2026/06/06		G
163	BELT CONVEYOR FOR BOTTOM ASH - CONTROL		2026/06/06		G
164	BELT CONVEYOR FOR BOTTOM ASH - CONTROL		2026/06/06		G
165	BELT CONVEYOR FOR BOTTOM ASH - SIGNALIZATION		2026/06/08		G
166	BELT CONVEYOR FOR BOTTOM ASH - SIGNALIZATION		2026/06/06		G
167	BELT CONVEYOR FOR BOTTOM ASH - SIGNALIZATION		2026/06/06		G
168	BELT CONVEYOR FOR BOTTOM ASH - SIGNALIZATION		2026/06/06		G
169	ASH CRUSHER BELOW ECO		2026/06/06		G
170	ASH CRUSHER BELOW ECO - CONTROL		2026/06/06		G
171	ASH CRUSHER BELOW ECO - CONTROL		2026/06/06		G
172	ASH CRUSHER BELOW ECO - SIGNALIZATION		2026/06/06		G
173	ASH CRUSHER BELOW ECO - SIGNALIZATION		2026/06/06		G
174	ASH CRUSHER BELOW SH 3		2026/06/06		G
175	ASH CRUSHER BELOW SH 3 - CONTROL		2026/06/08		G
176	ASH CRUSHER BELOW SH 3 - CONTROL		2026/06/06		G
177	ASH CRUSHER BELOW SH 3 - SIGNALIZATION		2026/06/06		G
178	ASH CRUSHER BELOW SH 3 - SIGNALIZATION		2026/06/06		G
179	CHAIN CONVEYOR UNDER ECO		2026/06/06		G
180	CHAIN CONVEYOR UNDER ECO - CONTROL		2026/06/08		G
181	CHAIN CONVEYOR UNDER ECO - CONTROL		2026/06/06		G
182	CHAIN CONVEYOR UNDER ECO - SIGNALIZATION		2026/06/06		G
183	CHAIN CONVEYOR UNDER ECO - SIGNALIZATION		2026/06/06		G
184	CLOSED CHAIN CONVEYOR FOR ASH DISPATCH		2026/06/06		G
185	CLOSED CHAIN CONVEYOR FOR ASH DISPATCH - CONTROL		2026/06/08		G
186	CLOSED CHAIN CONVEYOR FOR ASH DISPATCH - CONTROL		2026/06/06		G
187	CLOSED CHAIN CONVEYOR FOR ASH DISPATCH - SIGNALISATION		2026/06/08		G
188	CLOSED CHAIN CONVEYOR FOR ASH DISPATCH - SIGNALISATION		2026/06/06		G
189	LAMP TEST		2026/06/06		G
201	SIGNALIZATION		2026/06/06		G
205	SPARE		2026/06/08		G

Table of contents

Page number	Page description	Remarks of creator	Date	Checked by	Revision
206	SPARE		2026/06/06		G
211	COMMUNICATION		2026/05/28		G
230	Terminal diagram =4LKD001AR+4LKD003AR-X 162 05		2026/05/28		F
231	Terminal diagram =4LKD001AR+4LKD003AR-X 163 09		2026/05/28		F
232	Terminal diagram =4LKD001AR+4LKD003AR-X 165 06		2026/05/28		F
233	Terminal diagram =4LKD001AR+4LKD003AR-X 165 06		2026/05/28		F
234	Terminal diagram =4LKD001AR+4LKD003AR-X 169 05		2026/05/28		F
235	Terminal diagram =4LKD001AR+4LKD003AR-X 170 09		2026/05/28		F
236	Terminal diagram =4LKD001AR+4LKD003AR-X 172 06		2026/05/28		F
237	Terminal diagram =4LKD001AR+4LKD003AR-X 174 05		2026/05/28		F
238	Terminal diagram =4LKD001AR+4LKD003AR-X 175 09		2026/05/28		F
239	Terminal diagram =4LKD001AR+4LKD003AR-X 177 06		2026/05/28		F
240	Terminal diagram =4LKD001AR+4LKD003AR-X 179 05		2026/05/28		F
241	Terminal diagram =4LKD001AR+4LKD003AR-X 180 09		2026/05/28		F
242	Terminal diagram =4LKD001AR+4LKD003AR-X 182 06		2026/05/28		F
243	Terminal diagram =4LKD001AR+4LKD003AR-X 184 05		2026/05/28		F
244	Terminal diagram =4LKD001AR+4LKD003AR-X 185 09		2026/05/28		F
245	Terminal diagram =4LKD001AR+4LKD003AR-X 187 06		2026/05/28		F
246	Terminal diagram =4LKD001AR+4LKD003AR-XB 189 03		2026/05/28		F
247	Terminal diagram =4LKD001AR+4LKD003AR-XS 201 03		2026/05/28		F
248	Terminal diagram =4LKD001AR+4LKD003AR-XS 205 02		2026/05/28		F
249	Terminal diagram =4LKD001AR+4LKD003AR-XS 205 02		2026/05/28		F
250	Terminal diagram =4LKD001AR+4LKD003AR-X 165 06		2026/05/28		
251	Terminal diagram =4LKD001AR+4LKD003AR-X 165 06		2026/05/28		
252	Terminal diagram =4LKD001AR+4LKD003AR-XS 205 02		2026/05/28		
253	Terminal diagram =4LKD001AR+4LKD003AR-XS 205 02		2026/05/28		
401	SUMMARIZED PARTS LIST		2026/05/28		
402	SUMMARIZED PARTS LIST		2026/05/28		
403	SUMMARIZED PARTS LIST		2026/06/08		

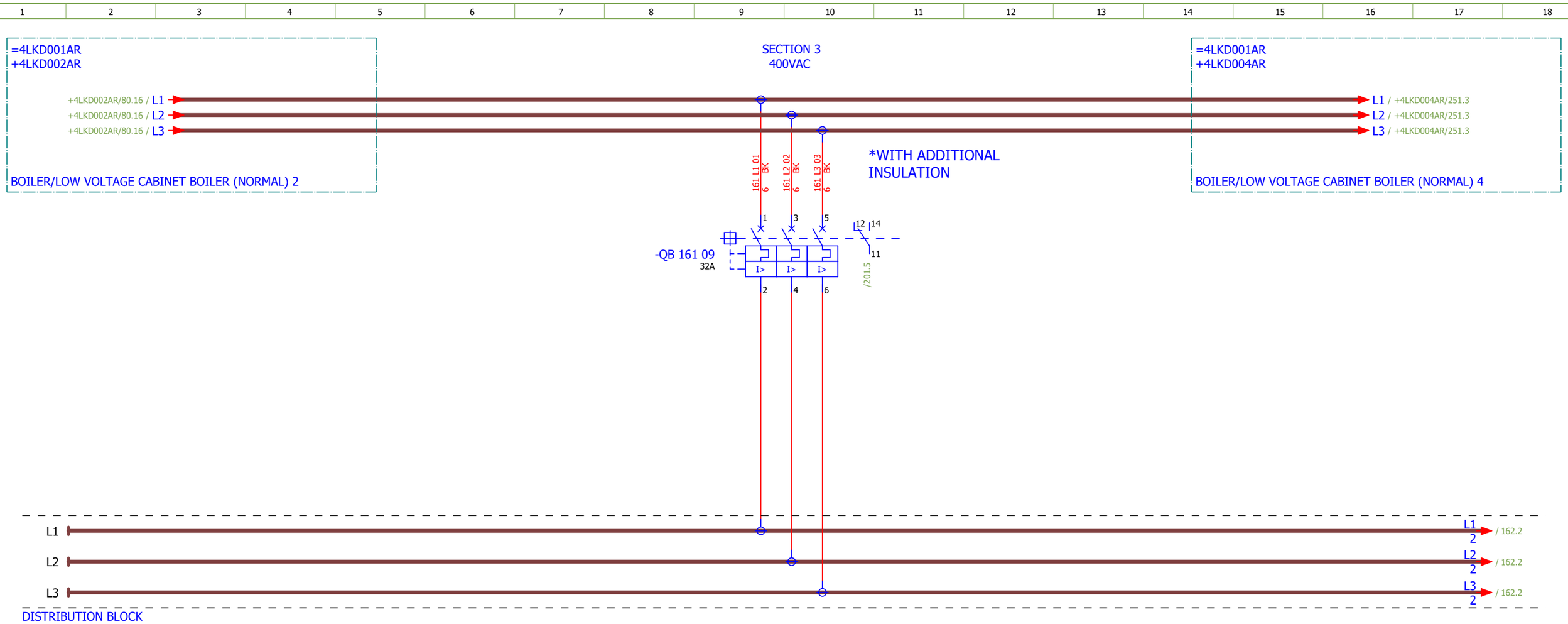

NOTE:
Conducteur de phase L1 avec manchon noir
Conducteur de phase L2 avec manchon marron
Conducteur de phase L3 avec manchon rouge

Date:	17.03.2026.	SINTAKSA A Voith Company	Client:	ANDRITZ TEP d.o.o. Ulica 108. brigade ZNG 84, 35000 Slavonski Brod, Croatia	Scope: BOILER/LOW VOLTAGE CABINET BOILER (NORMAL) 3	Project: BRC-4	Unit & Issuer: ATEP0	Number: 1874	Revision: G
Drawn:	Luka Božičević								#D
Approved:	Grga Kolić		Object:	RDF Albioma Les Bois Rouge Reunion - France	Content: 400VAC DISTRIBUTION	Drawing designation: BRC-4-ATEP0-1874-G			=4LKD001AR
Format:	A3								+4LKD003AR

Sheet: 161
Next: 162

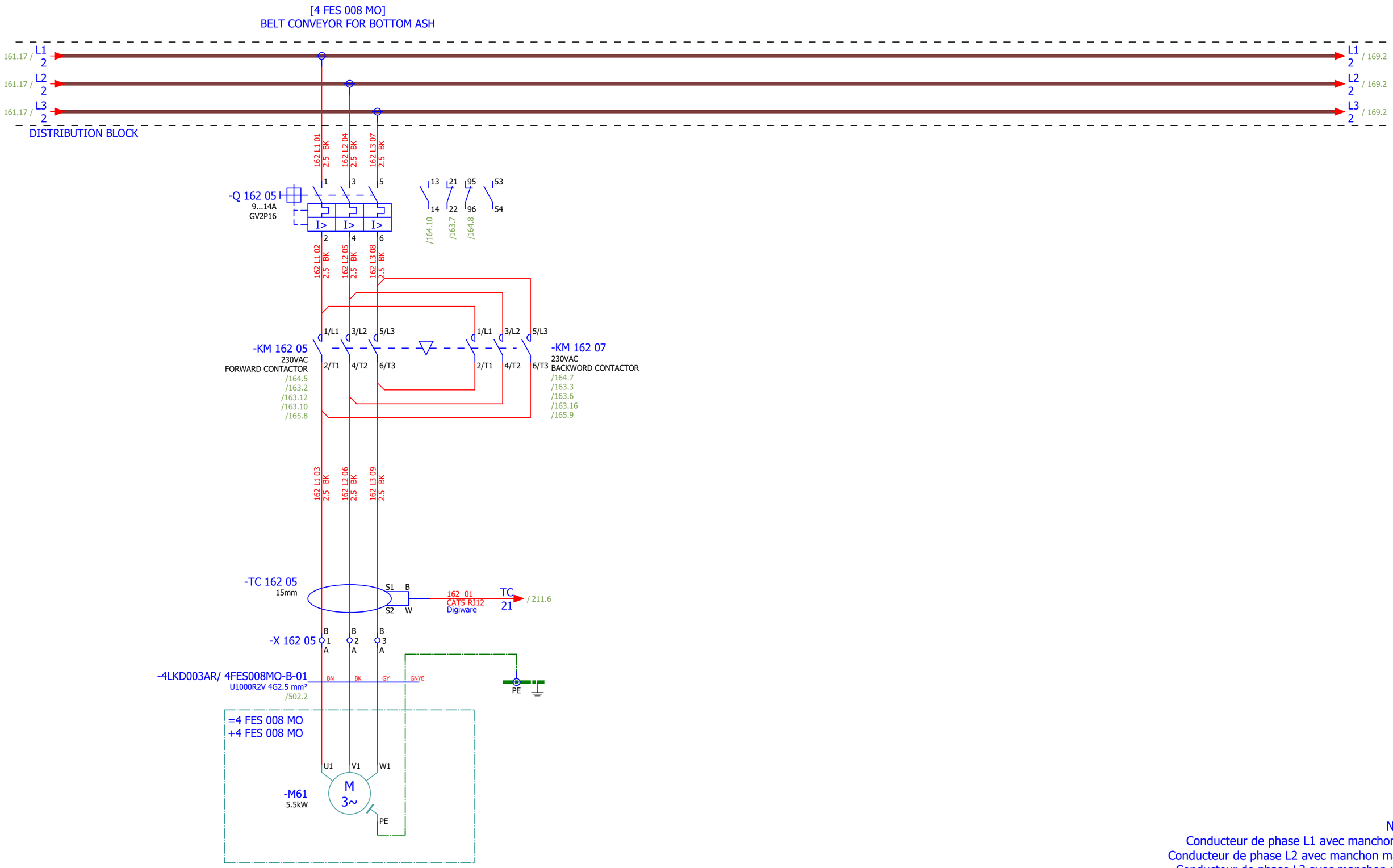

NOTE:
Conducteur de phase L1 avec manchon noir
Conducteur de phase L2 avec manchon marron
Conducteur de phase L3 avec manchon rouge

Date:	17.03.2026.	SINTAKSA A Voith Company	Client:	ANDRITZ TEP d.o.o. Ulica 108. brigade ZNG 84, 35000 Slavonski Brod, Croatia	Scope: BOILER/LOW VOLTAGE CABINET BOILER (NORMAL) 3	Project: BRC-4	Unit & Issuer: ATEP0	Number: 1874	Revision: G
Drawn:	Luka Božičević								#D
Approved:	Grga Kolić		Object:	RDF Albioma Les Bois Rouge Reunion - France	Content: BELT CONVEYOR FOR BOTTOM ASH	Drawing designation: BRC-4-ATEP0-1874-G		=4LKD001AR	Sheet: 162
Format:	A3							+4LKD003AR	Next: 163

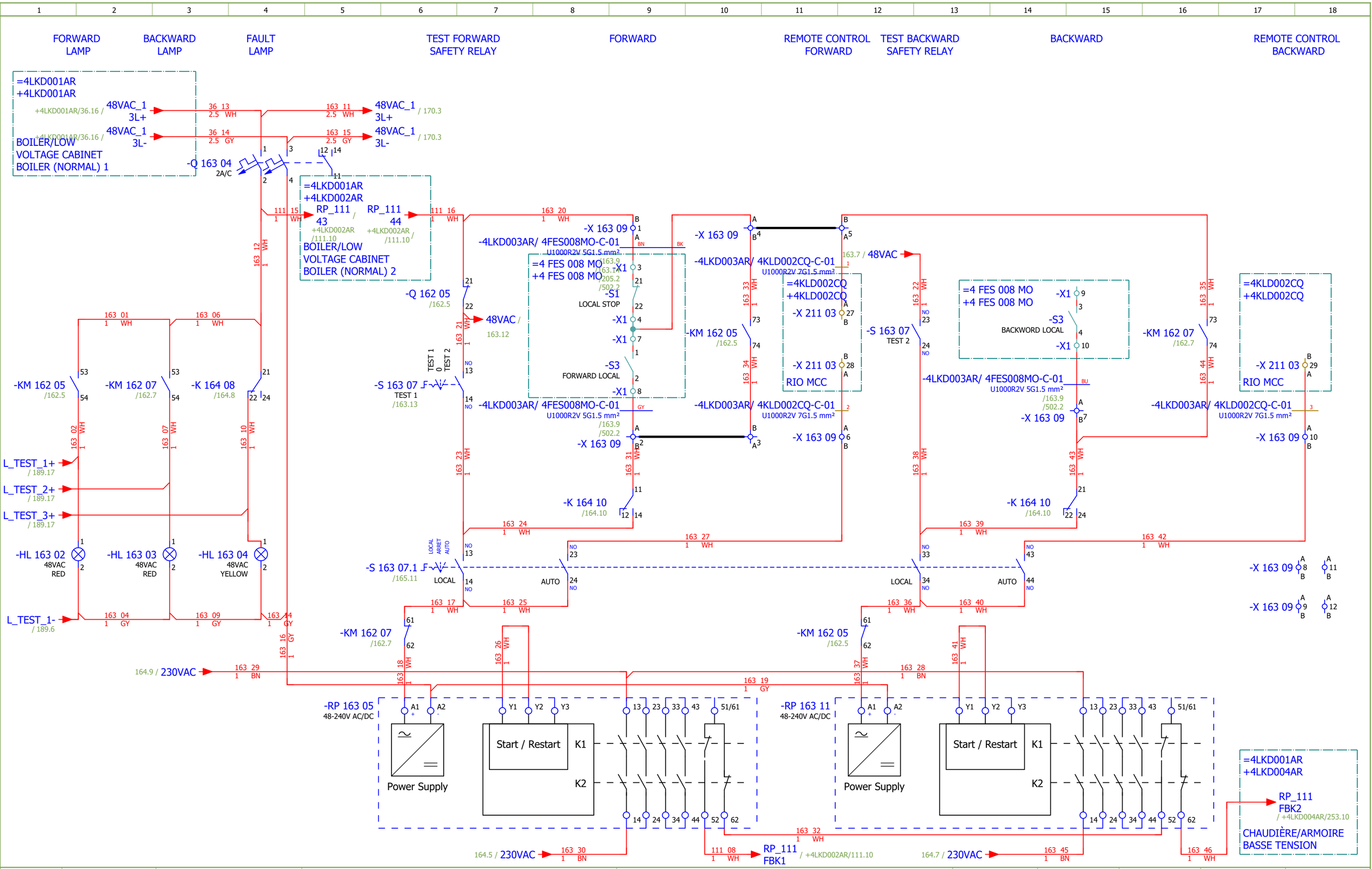

Date:	17.03.2026.	SINTAKSA A Voith Company	Client: ANDRITZ TEP d.o.o. Ulica 108. brigade ZNG 84, 35000 Slavonski Brod, Croatia	Scope: BOILER/LOW VOLTAGE CABINET BOILER (NORMAL) 3	Project: BRC-4	Unit & Issuer: ATEP0	Number: 1874	Revision: G	#D
Drawn:	Luka Božičević								
Approved:	Grga Kolić		Object: RDF Albioma Les Bois Rouge Reunion - France	Content: BELT CONVEYOR FOR BOTTOM ASH - CONTROL	Drawing designation: BRC-4-ATEP0-1874-G			=4LKD001AR	Sheet: 163
Format:	A3							+4LKD003AR	Next: 164

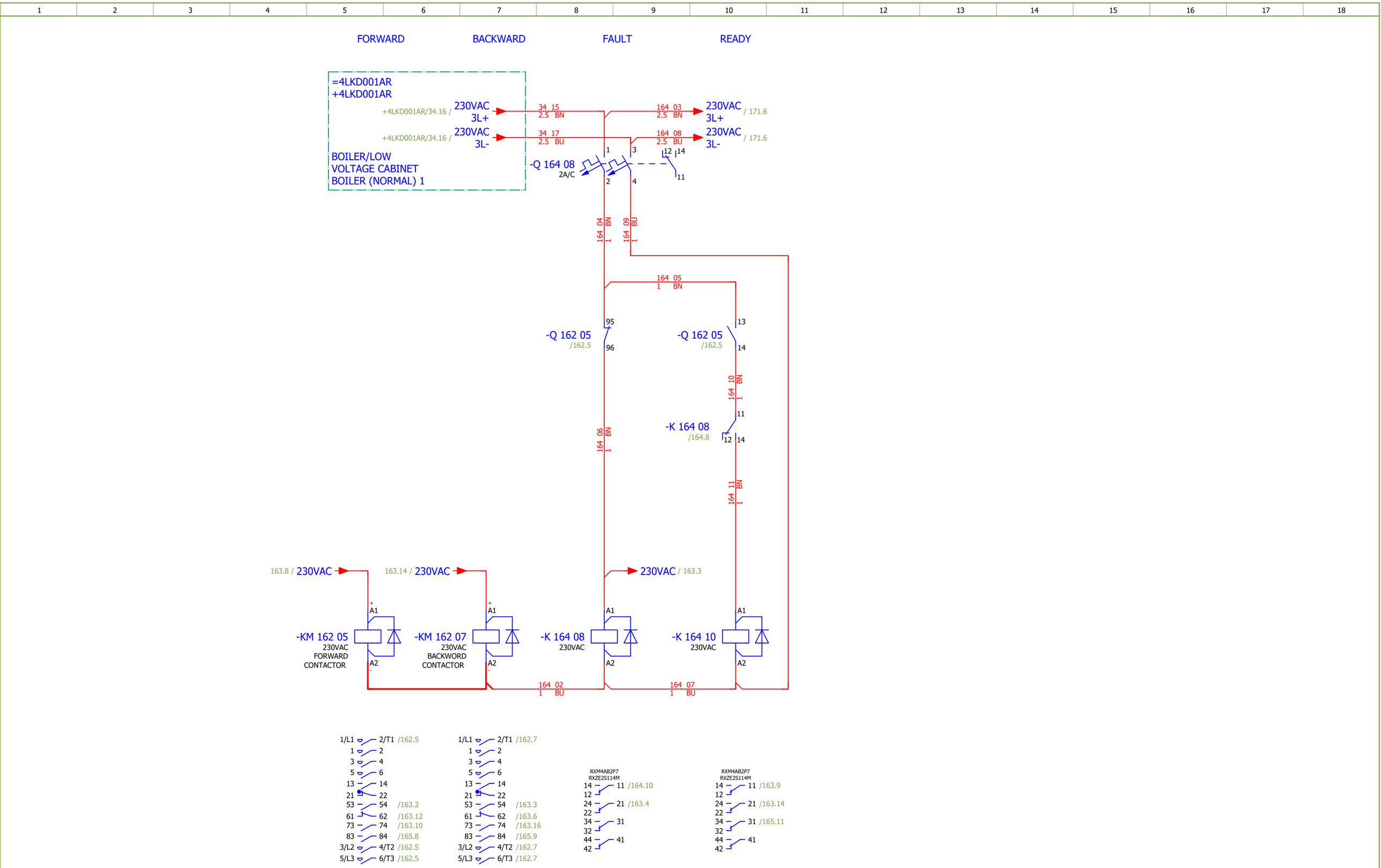

Date:	17.03.2026.	SINTAKSA A Voith Company	Client:	ANDRITZ TEP d.o.o. Ulica 108. brigade ZNG 84, 35000 Slavonski Brod, Croatia	Scope:	BOILER/LOW VOLTAGE CABINET BOILER (NORMAL) 3	Project: BRC-4	Unit & Issuer: ATEP0	Number: 1874	Revision: G	#D
Drawn:	Luka Božičević										
Approved:	Grga Kolić		Object:	RDF Albioma Les Bois Rouge Reunion - France	Content:	BELT CONVEYOR FOR BOTTOM ASH - CONTROL	Drawing designation: BRC-4-ATEP0-1874-G			=4LKD001AR	Sheet: 164
Format:	A3									+4LKD003AR	Next: 165

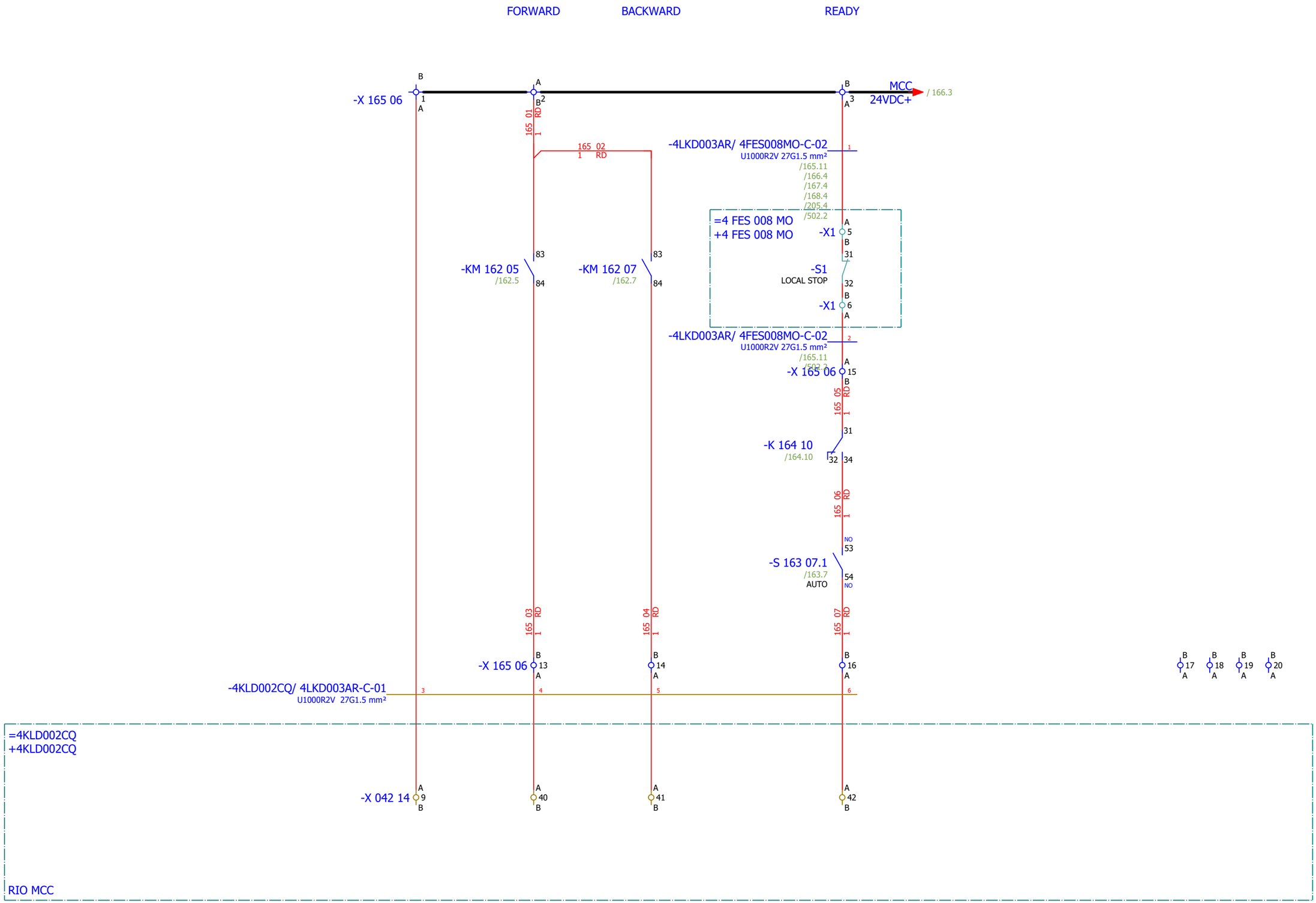

Date:	17.03.2026.	SINTAKSA A Voith Company	Client:	ANDRITZ TEP d.o.o. Ulica 108. brigade ZNG 84, 35000 Slavonski Brod, Croatia	Scope: BOILER/LOW VOLTAGE CABINET BOILER (NORMAL) 3	Project: BRC-4	Unit & Issuer: ATEP0	Number: 1874	Revision: G
Drawn:	Luka Božičević								#D
Approved:	Grga Kolić		Object:	RDF Albioma Les Bois Rouge Reunion - France	Content: BELT CONVEYOR FOR BOTTOM ASH - SIGNALIZATION	Drawing designation: BRC-4-ATEP0-1874-G		=4LKD001AR	Sheet: 165
Format:	A3							+4LKD003AR	Next: 166

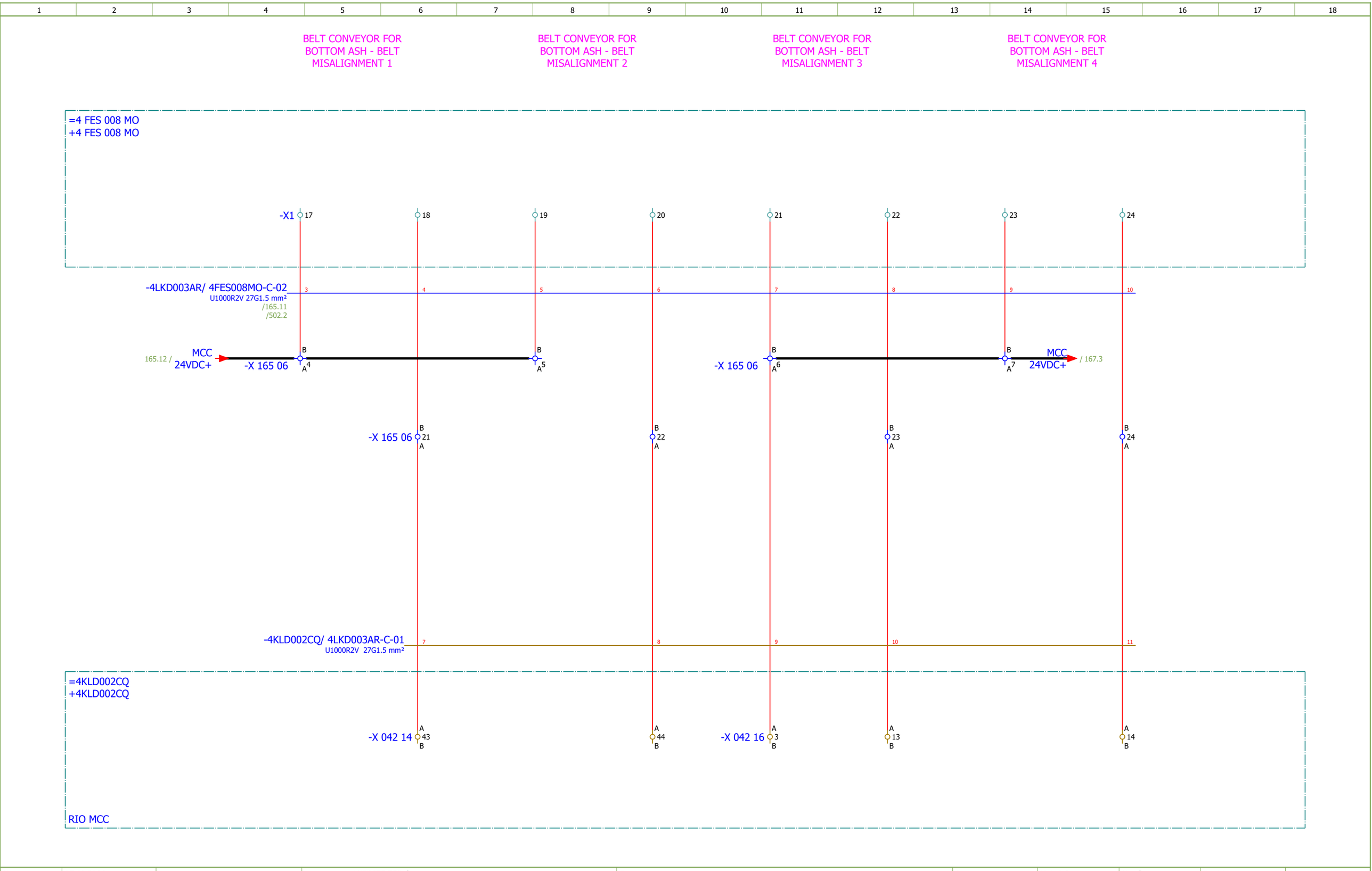

Date:	17.03.2026.	SINTAKSA A Voith Company	Client:	ANDRITZ TEP d.o.o. Ulica 108. brigade ZNG 84, 35000 Slavonski Brod, Croatia	Scope: BOILER/LOW VOLTAGE CABINET BOILER (NORMAL) 3	Project: BRC-4	Unit & Issuer: ATEP0	Number: 1874	Revision: G
Drawn:	Luka Božičević								#D
Approved:	Grga Kolić		Object:	RDF Albioma Les Bois Rouge Reunion - France	Content: BELT CONVEYOR FOR BOTTOM ASH - SIGNALIZATION	Drawing designation: BRC-4-ATEP0-1874-G			=4LKD001AR
Format:	A3								+4LKD003AR

Sheet: 166
Next: 167

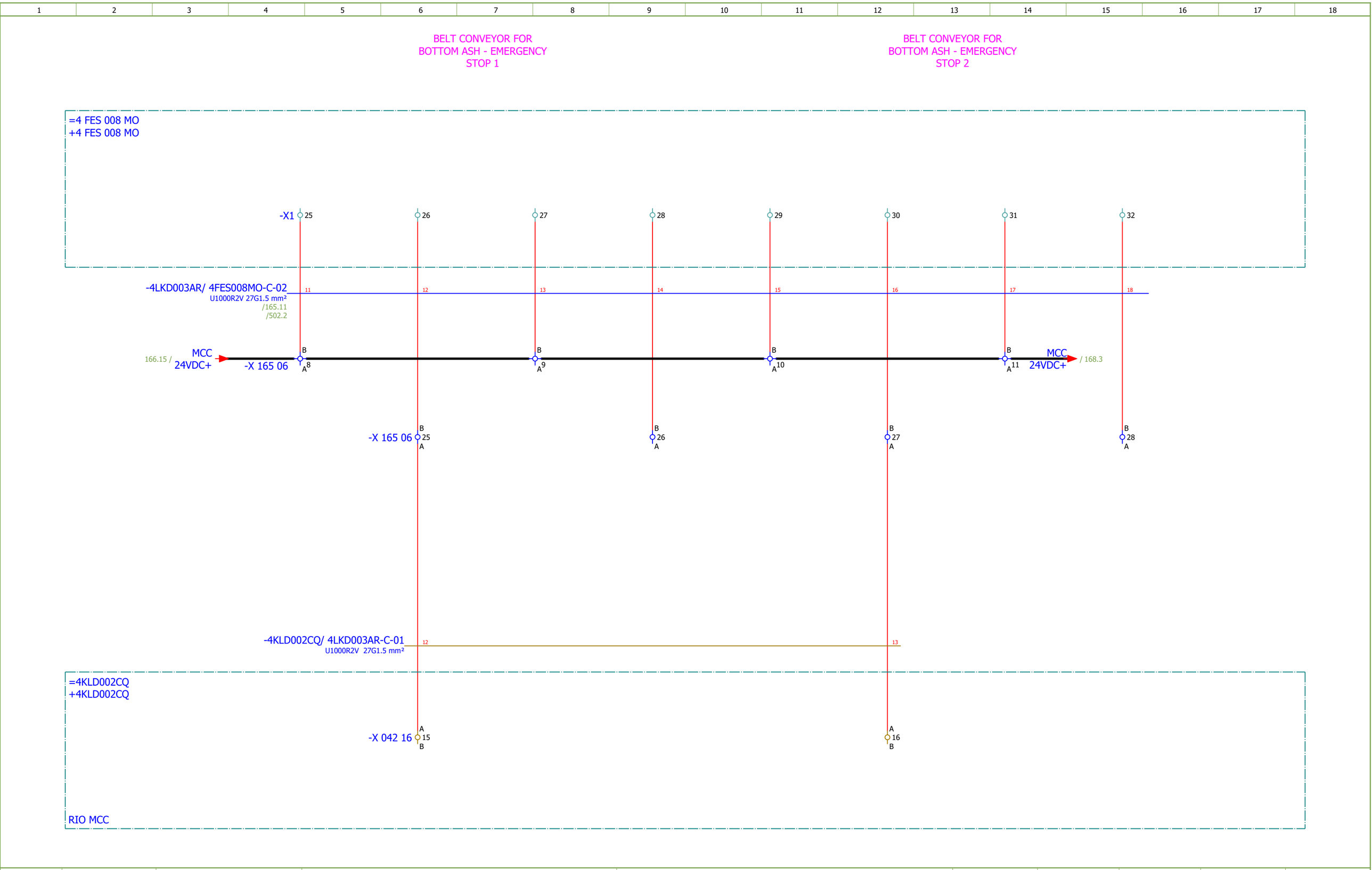

Date:	17.03.2026.	SINTAKSA A Voith Company	Client:	ANDRITZ TEP d.o.o. Ulica 108. brigade ZNG 84, 35000 Slavonski Brod, Croatia	Scope: BOILER/LOW VOLTAGE CABINET BOILER (NORMAL) 3	Project: BRC-4	Unit & Issuer: ATEP0	Number: 1874	Revision: G	
Drawn:	Luka Božičević									#D
Approved:	Grga Kolić		Object:	RDF Albioma Les Bois Rouge Reunion - France	Content: BELT CONVEYOR FOR BOTTOM ASH - SIGNALIZATION	Drawing designation: BRC-4-ATEP0-1874-G			=4LKD001AR	Sheet: 167
Format:	A3								+4LKD003AR	Next: 168

BELT CONVEYOR FOR
BOTTOM ASH - "0" PULSE

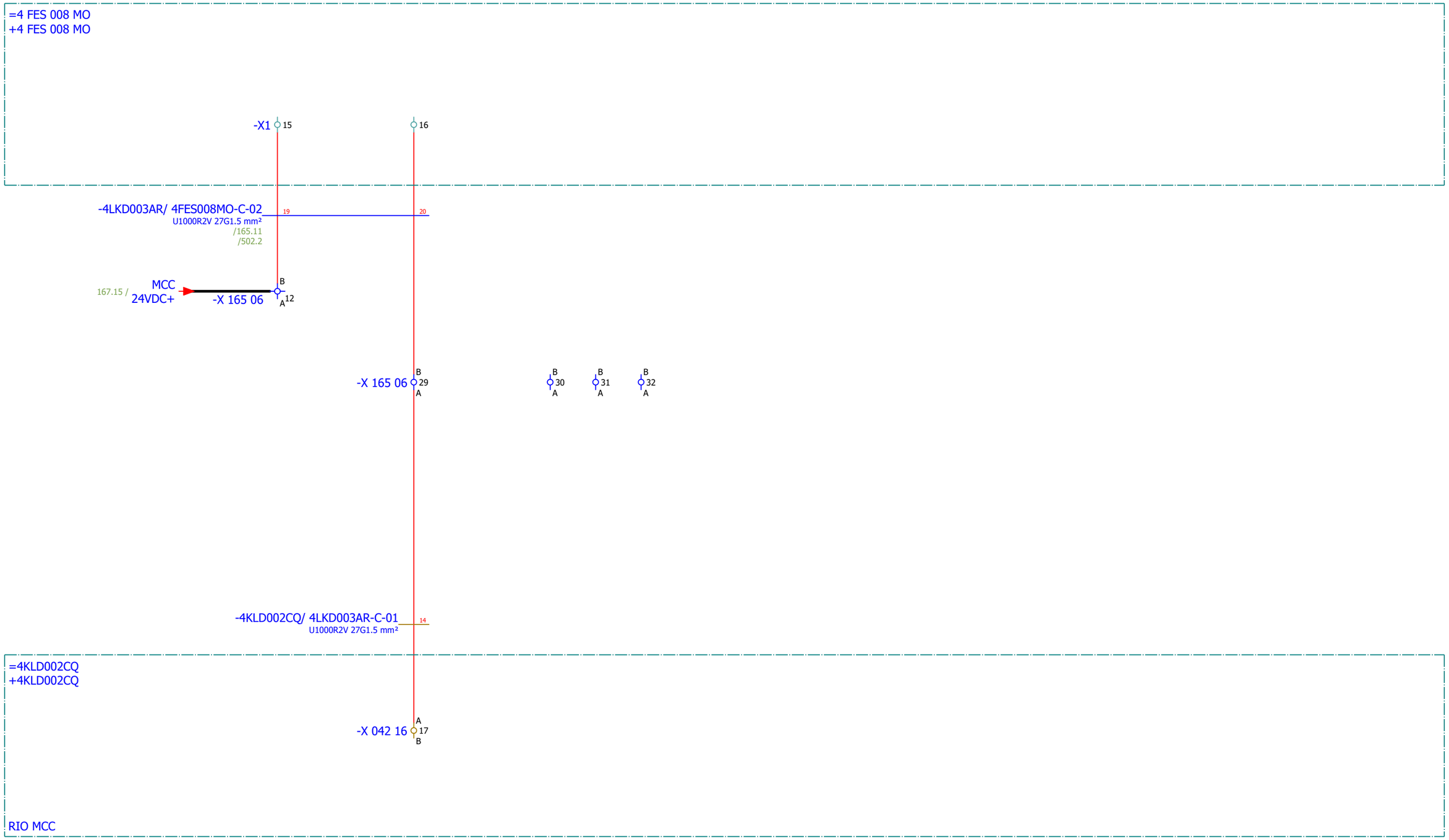

Date:	17.03.2026.	SINTAKSA A Voith Company	Client:	ANDRITZ TEP d.o.o. Ulica 108. brigade ZNG 84, 35000 Slavonski Brod, Croatia	Scope: BOILER/LOW VOLTAGE CABINET BOILER (NORMAL) 3	Project: BRC-4	Unit & Issuer: ATEP0	Number: 1874	Revision: G
Drawn:	Luka Božičević								#D
Approved:	Grga Kolić		Object:	RDF Albioma Les Bois Rouge Reunion - France	Content: BELT CONVEYOR FOR BOTTOM ASH - SIGNALIZATION	Drawing designation: BRC-4-ATEP0-1874-G		=4LKD001AR	Sheet: 168
Format:	A3							+4LKD003AR	Next: 169

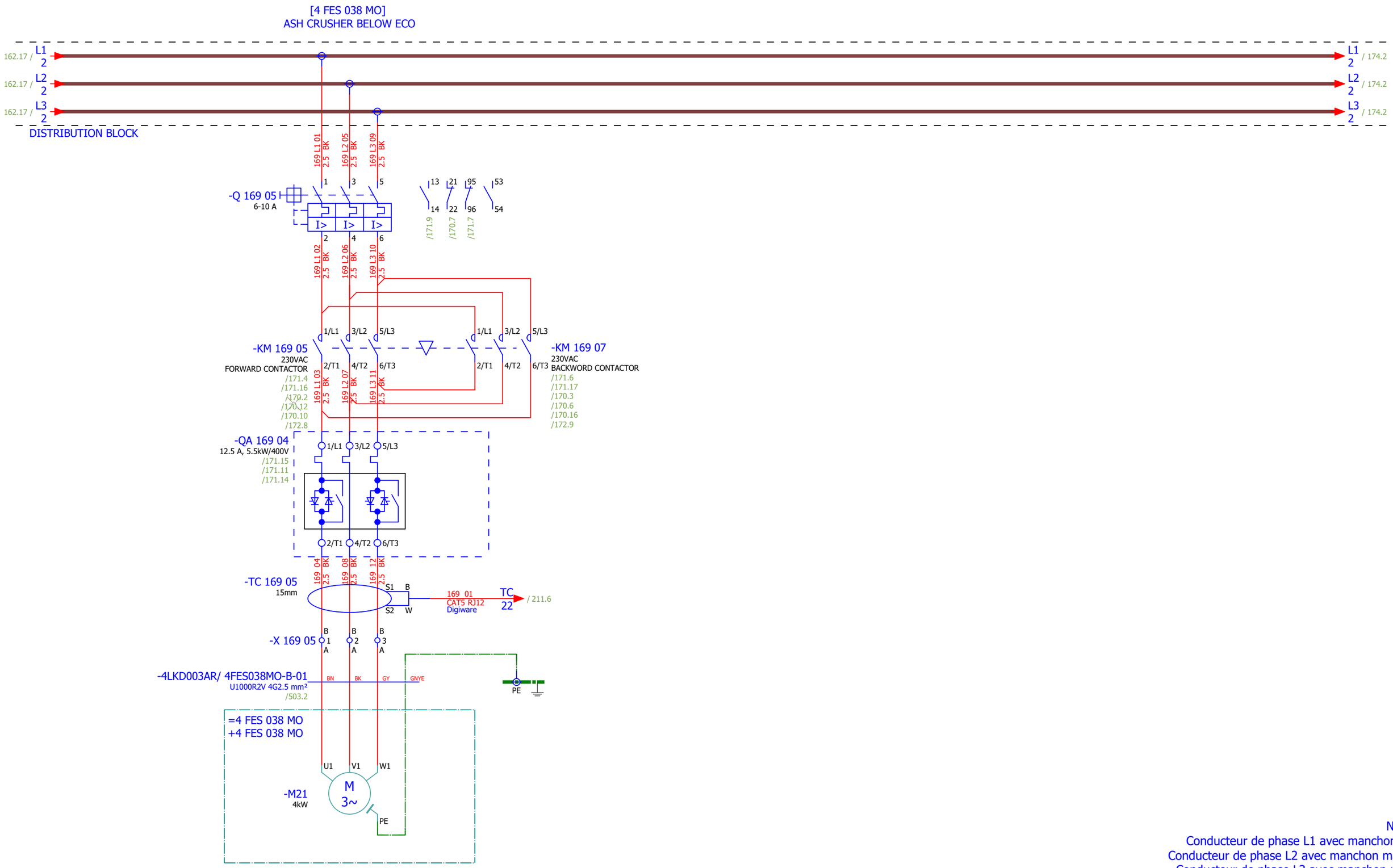

NOTE:
Conducteur de phase L1 avec manchon noir
Conducteur de phase L2 avec manchon marron
Conducteur de phase L3 avec manchon rouge

Date:	17.03.2026.	SINTAKSA A Voith Company	Client:	ANDRITZ TEP d.o.o. Ulica 108. brigade ZNG 84, 35000 Slavonski Brod, Croatia	Scope: BOILER/LOW VOLTAGE CABINET BOILER (NORMAL) 3	Project: BRC-4	Unit & Issuer: ATEP0	Number: 1874	Revision: G
Drawn:	Luka Božičević								#D
Approved:	Grga Kolić		Object:	RDF Albioma Les Bois Rouge Reunion - France	Content: ASH CRUSHER BELOW ECO	Drawing designation: BRC-4-ATEP0-1874-G		=4LKD001AR	Sheet: 169
Format:	A3							+4LKD003AR	Next: 170

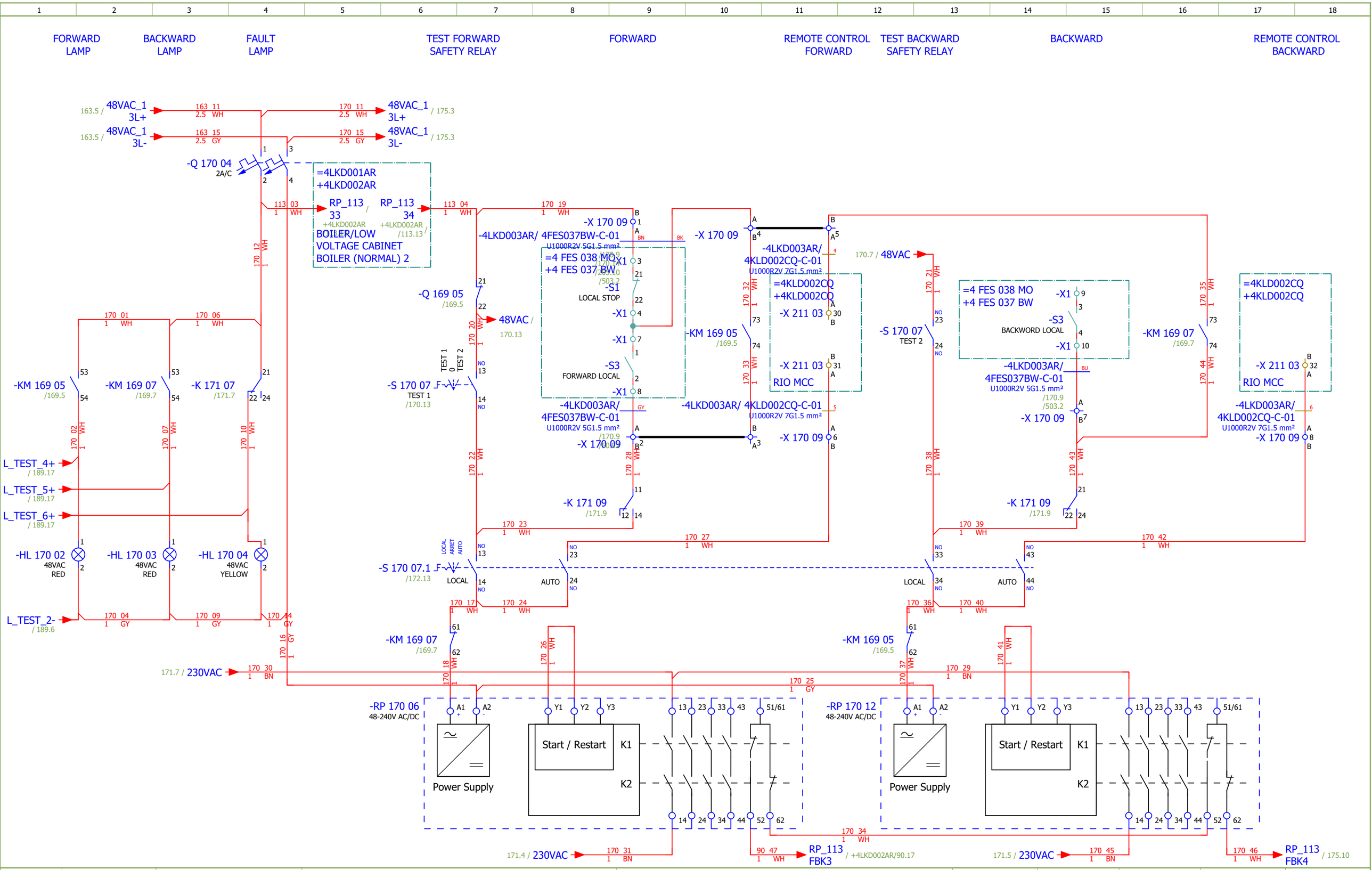

Date:	17.03.2026.	SINTAKSA A Voith Company	Client:	ANDRITZ TEP d.o.o. Ulica 108. brigade ZNG 84, 35000 Slavonski Brod, Croatia	Scope:	BOILER/LOW VOLTAGE CABINET BOILER (NORMAL) 3	Project: BRC-4	Unit & Issuer: ATEP0	Number: 1874	Revision: G	#D
Drawn:	Luka Božičević										
Approved:	Grga Kolić		Object:	RDF Albioma Les Bois Rouge Reunion - France	Content:	ASH CRUSHER BELOW ECO - CONTROL	Drawing designation: BRC-4-ATEP0-1874-G			=4LKD001AR	Sheet: 170
Format:	A3									+4LKD003AR	Next: 171

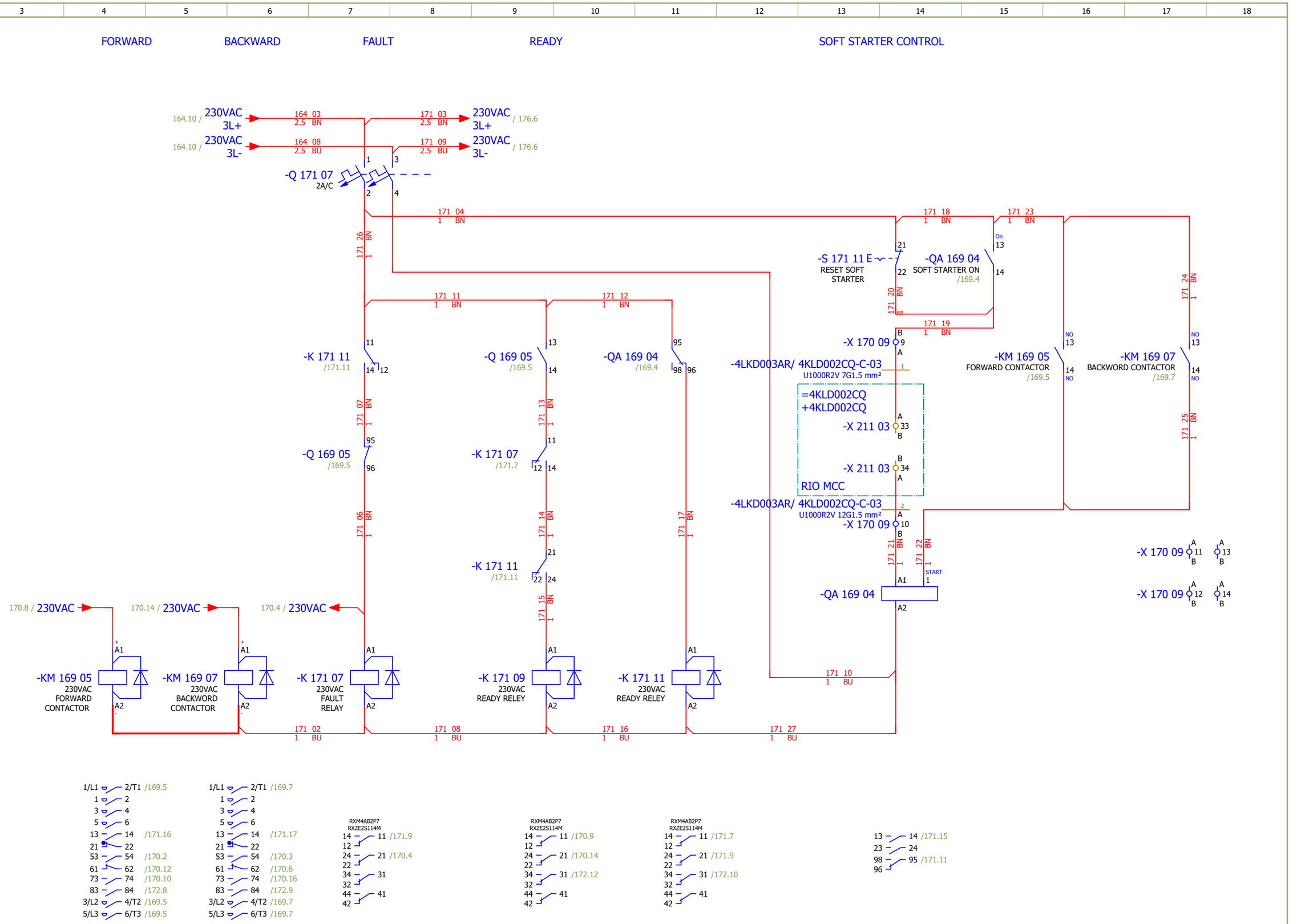

Date:	17.03.2026.	SINTAKSA A Voith Company	Client:	ANDRITZ TEP d.o.o. Ulica 108. brigade ZNG 84, 35000 Slavonski Brod, Croatia	Scope:	BOILER/LOW VOLTAGE CABINET BOILER (NORMAL) 3	Project: BRC-4	Unit & Issuer: ATEP0	Number: 1874	Revision: G	#D
Drawn:	Luka Božičević										
Approved:	Grga Kolić		Object:	RDF Albioma Les Bois Rouge Reunion - France	Content:	ASH CRUSHER BELOW ECO - CONTROL	Drawing designation: BRC-4-ATEP0-1874-G			=4LKD001AR	Sheet: 171
Format:	A3									+4LKD003AR	Next: 172

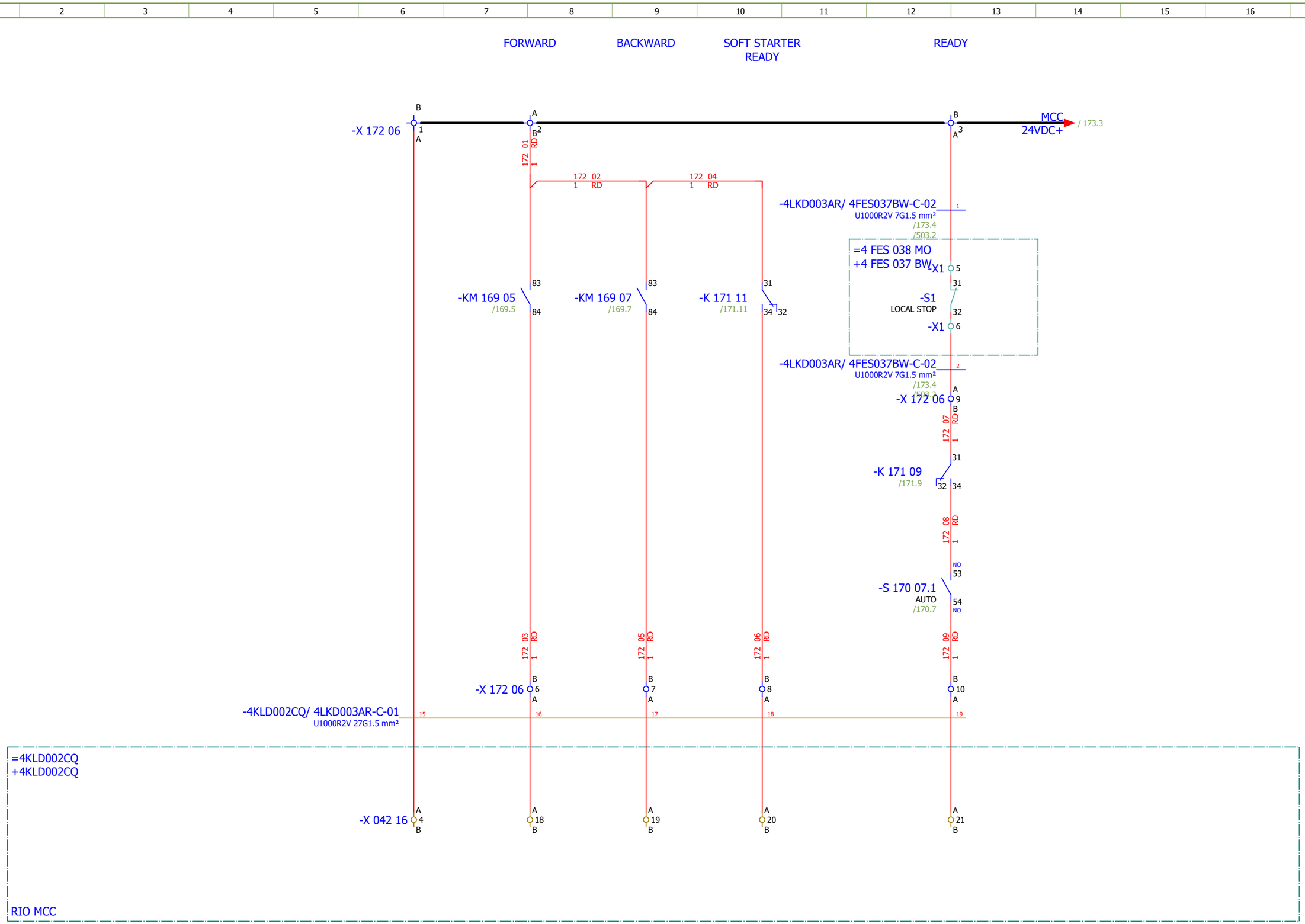

Date:	17.03.2026.	SINTAKSA A Voith Company	Client: ANDRITZ TEP d.o.o. Ulica 108. brigade ZNG 84, 35000 Slavonski Brod, Croatia	Scope: BOILER/LOW VOLTAGE CABINET BOILER (NORMAL) 3	Project: BRC-4	Unit & Issuer: ATEP0	Number: 1874	Revision: G	
Drawn:	Luka Božičević								#D
Approved:	Grga Kolić		Object: RDF Albioma Les Bois Rouge Reunion - France	Content: ASH CRUSHER BELOW ECO - SIGNALIZATION	Drawing designation: BRC-4-ATEP0-1874-G			=4LKD001AR	Sheet: 172
Format:	A3							+4LKD003AR	Next: 173

ASH CRUSHER BELOW ECO -
"0" PULSE

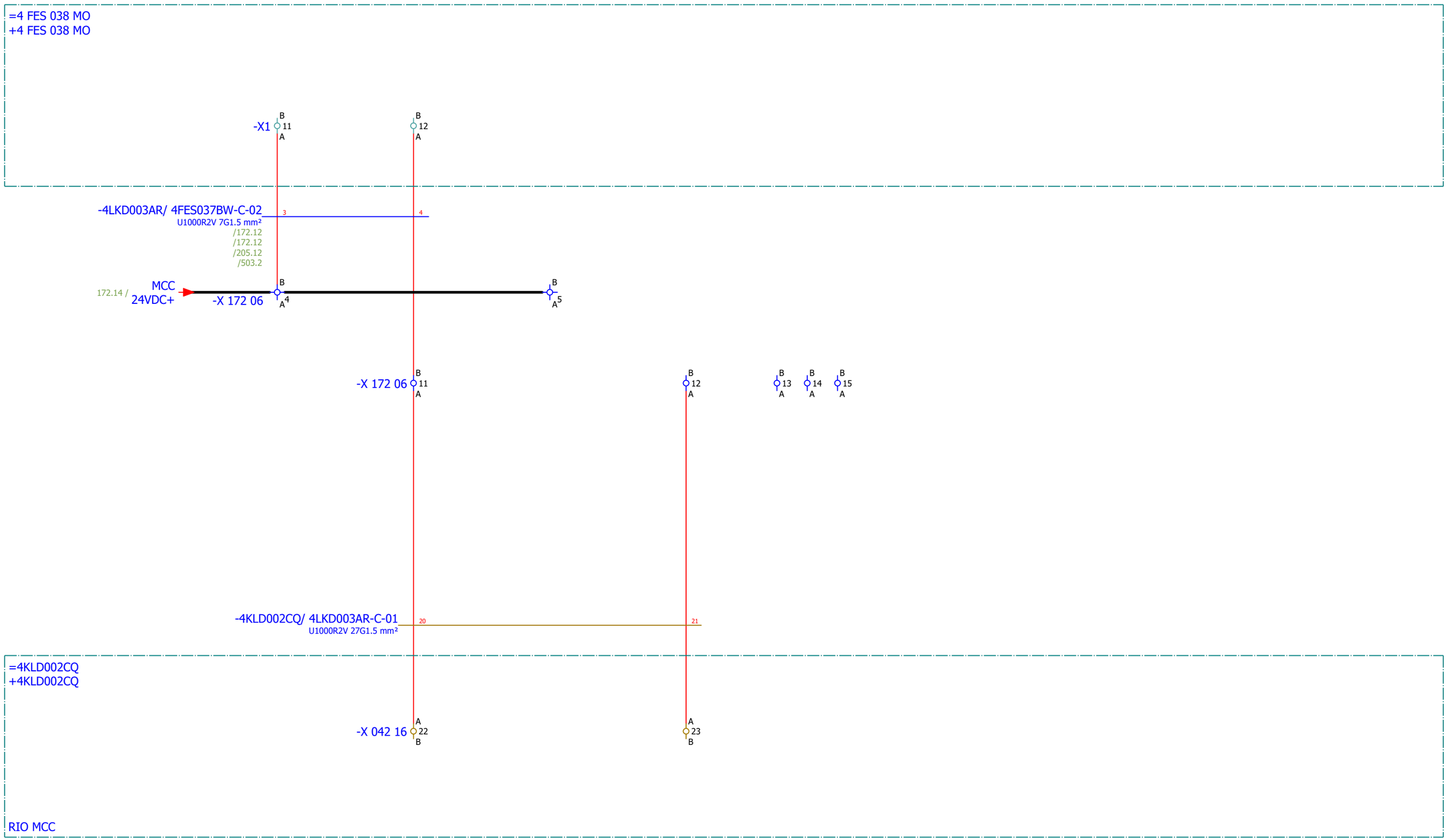

Date:	17.03.2026.	SINTAKSA A Voith Company	Client:	ANDRITZ TEP d.o.o. Ulica 108. brigade ZNG 84, 35000 Slavonski Brod, Croatia	Scope: BOILER/LOW VOLTAGE CABINET BOILER (NORMAL) 3	Project: BRC-4	Unit & Issuer: ATEP0	Number: 1874	Revision: G
Drawn:	Luka Božičević								#D
Approved:	Grga Kolić		Object:	RDF Albioma Les Bois Rouge Reunion - France	Content: ASH CRUSHER BELOW ECO - SIGNALIZATION	Drawing designation: BRC-4-ATEP0-1874-G		=4LKD001AR	Sheet: 173
Format:	A3							+4LKD003AR	Next: 174

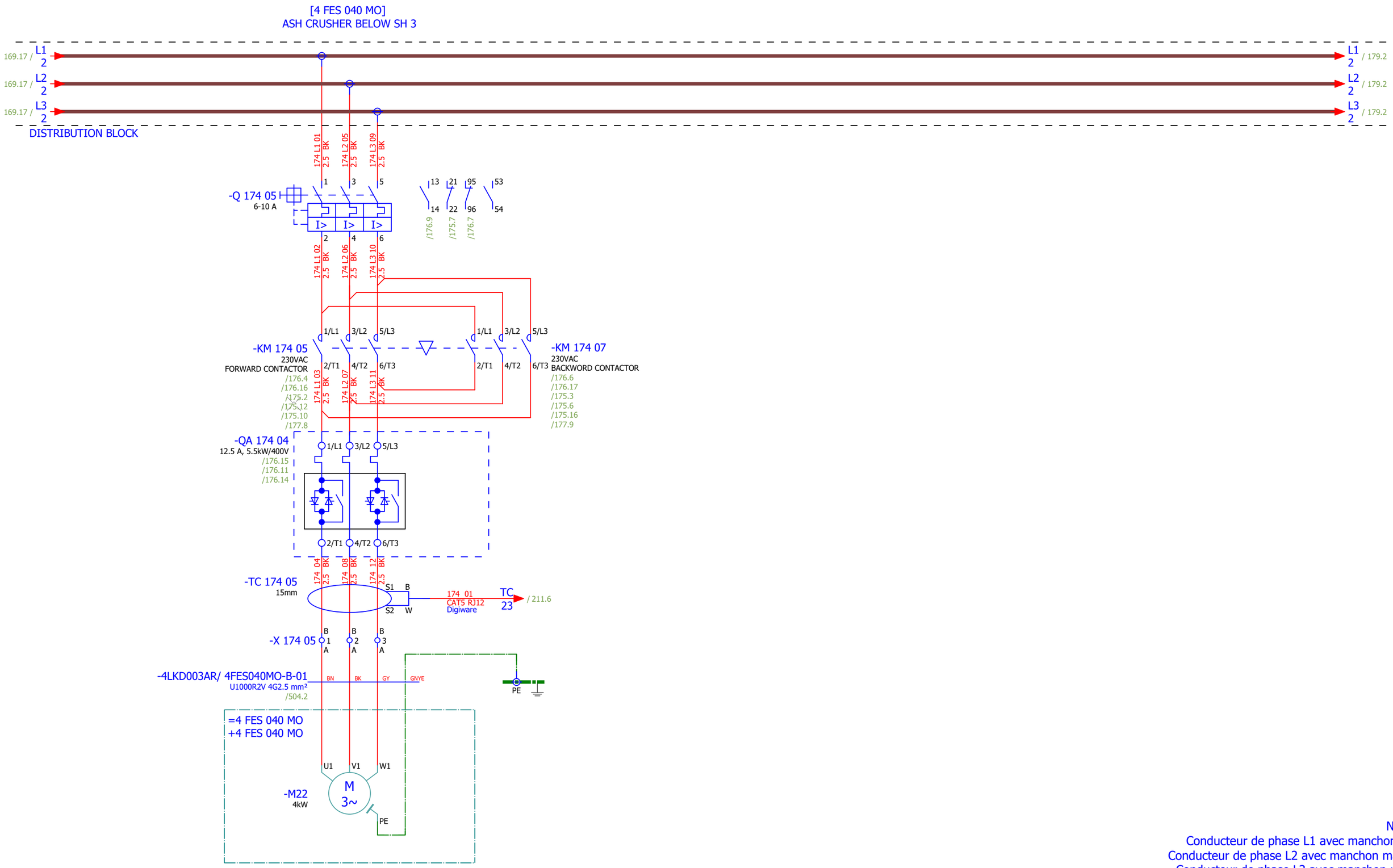

NOTE:
Conducteur de phase L1 avec manchon noir
Conducteur de phase L2 avec manchon marron
Conducteur de phase L3 avec manchon rouge

Date:	17.03.2026.	SINTAKSA A Voith Company	Client:	ANDRITZ TEP d.o.o. Ulica 108. brigade ZNG 84, 35000 Slavonski Brod, Croatia	Scope: BOILER/LOW VOLTAGE CABINET BOILER (NORMAL) 3	Project: BRC-4	Unit & Issuer: ATEP0	Number: 1874	Revision: G
Drawn:	Luka Božičević								#D
Approved:	Grga Kolić		Object:	RDF Albioma Les Bois Rouge Reunion - France	Content: ASH CRUSHER BELOW SH 3	Drawing designation: BRC-4-ATEP0-1874-G		=4LKD001AR	Sheet: 174
Format:	A3							+4LKD003AR	Next: 175

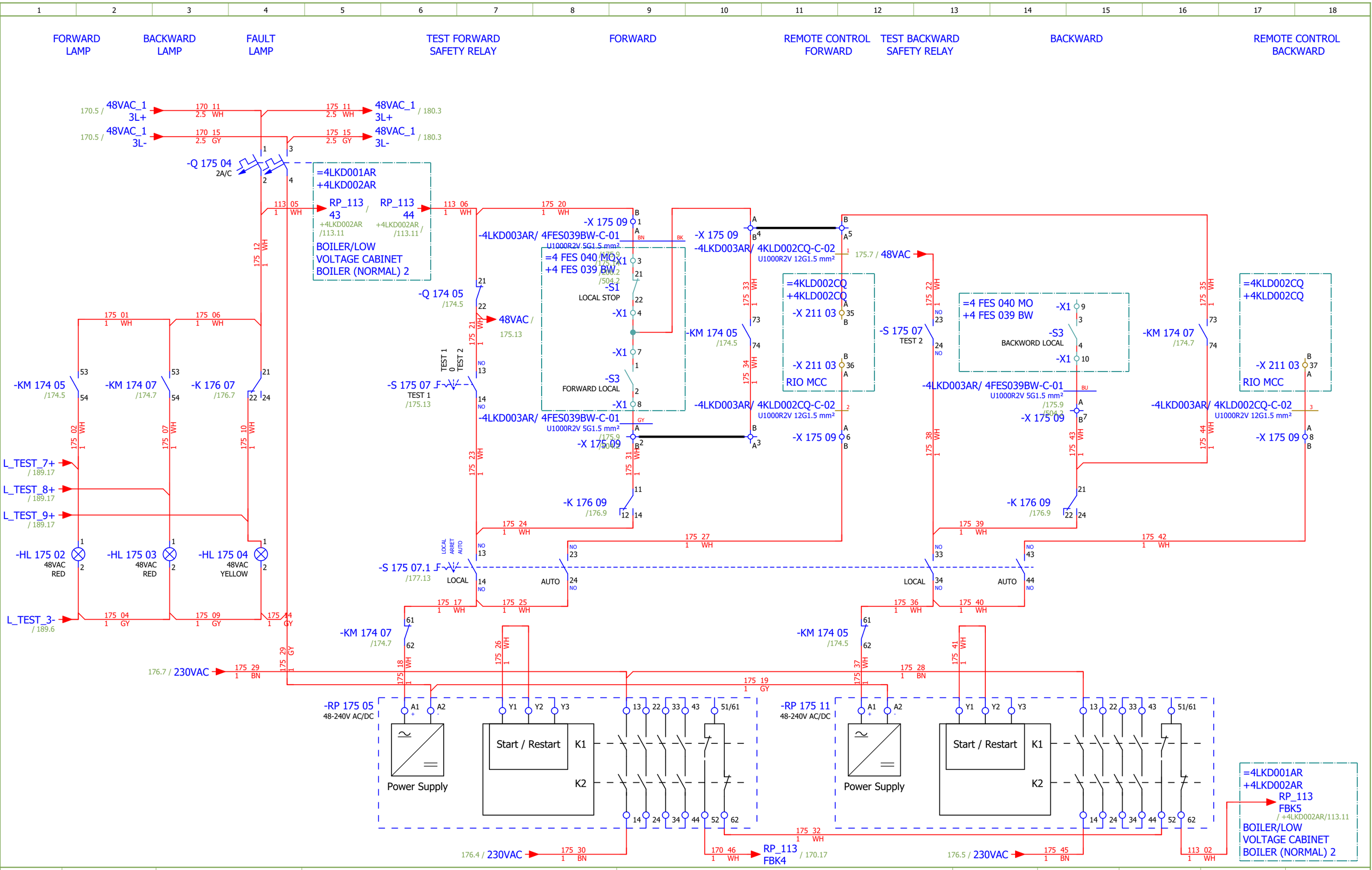

Date:	17.03.2026.	SINTAKSA A Voith Company	Client: ANDRITZ TEP d.o.o. Ulica 108. brigade ZNG 84, 35000 Slavonski Brod, Croatia	Scope: BOILER/LOW VOLTAGE CABINET BOILER (NORMAL) 3	Project: BRC-4	Unit & Issuer: ATEP0	Number: 1874	Revision: G	
Drawn:	Luka Božičević								#D
Approved:	Grga Kolić		Object: RDF Albioma Les Bois Rouge Reunion - France	Content: ASH CRUSHER BELOW SH 3 - CONTROL	Drawing designation: BRC-4-ATEP0-1874-G			=4LKD001AR	Sheet: 175
Format:	A3							+4LKD003AR	Next: 176

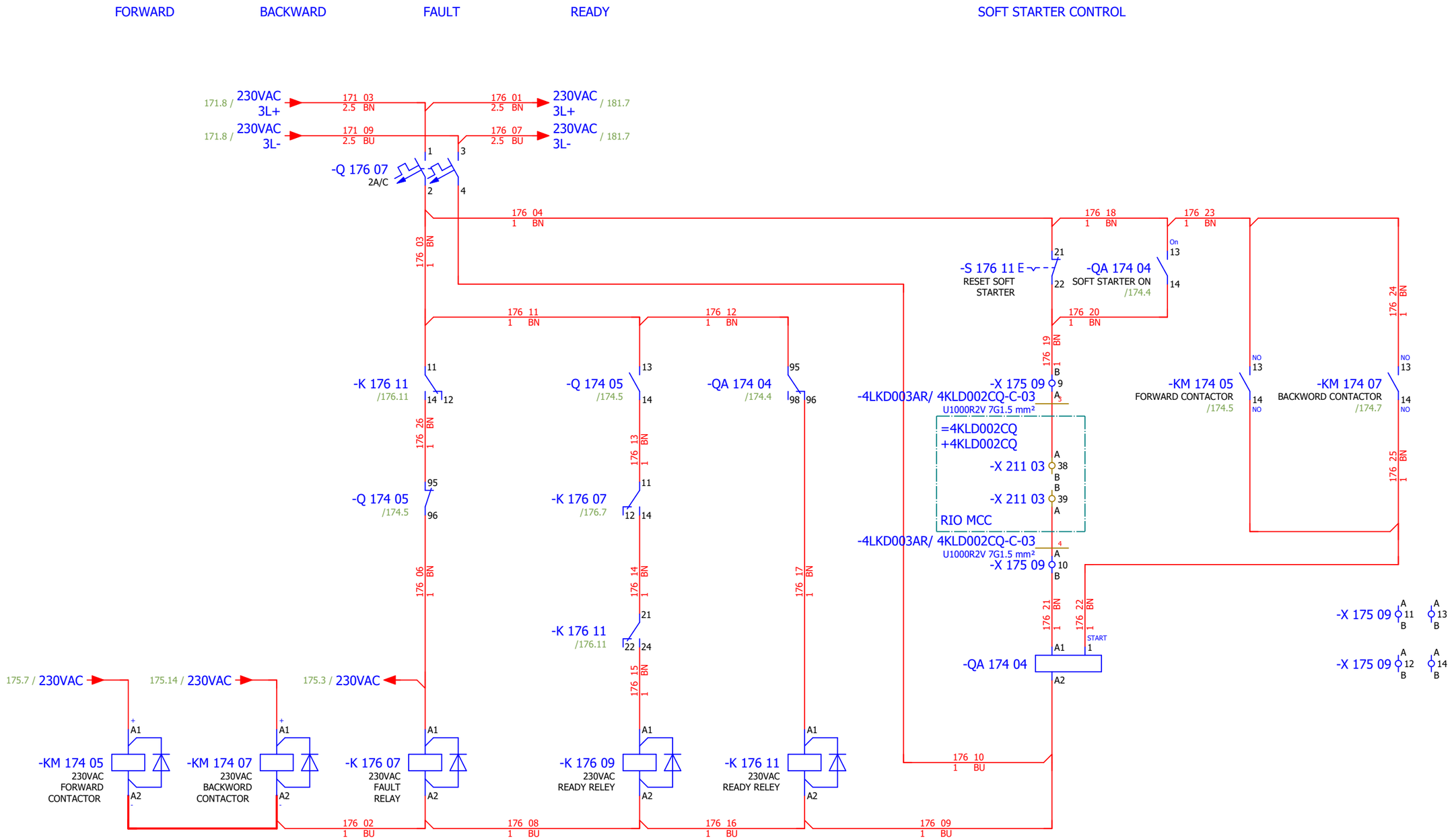

Date:	17.03.2026.	SINTAKSA A Voith Company	Client: ANDRITZ TEP d.o.o. Ulica 108. brigade ZNG 84, 35000 Slavonski Brod, Croatia	Scope: BOILER/LOW VOLTAGE CABINET BOILER (NORMAL) 3	Project: BRC-4	Unit & Issuer: ATEP0	Number: 1874	Revision: G	
Drawn:	Luka Božičević								#D
Approved:	Grga Kolić		Object: RDF Albioma Les Bois Rouge Reunion - France	Content: ASH CRUSHER BELOW SH 3 - CONTROL	Drawing designation: BRC-4-ATEP0-1874-G			=4LKD001AR	Sheet: 176
Format:	A3							+4LKD003AR	Next: 177

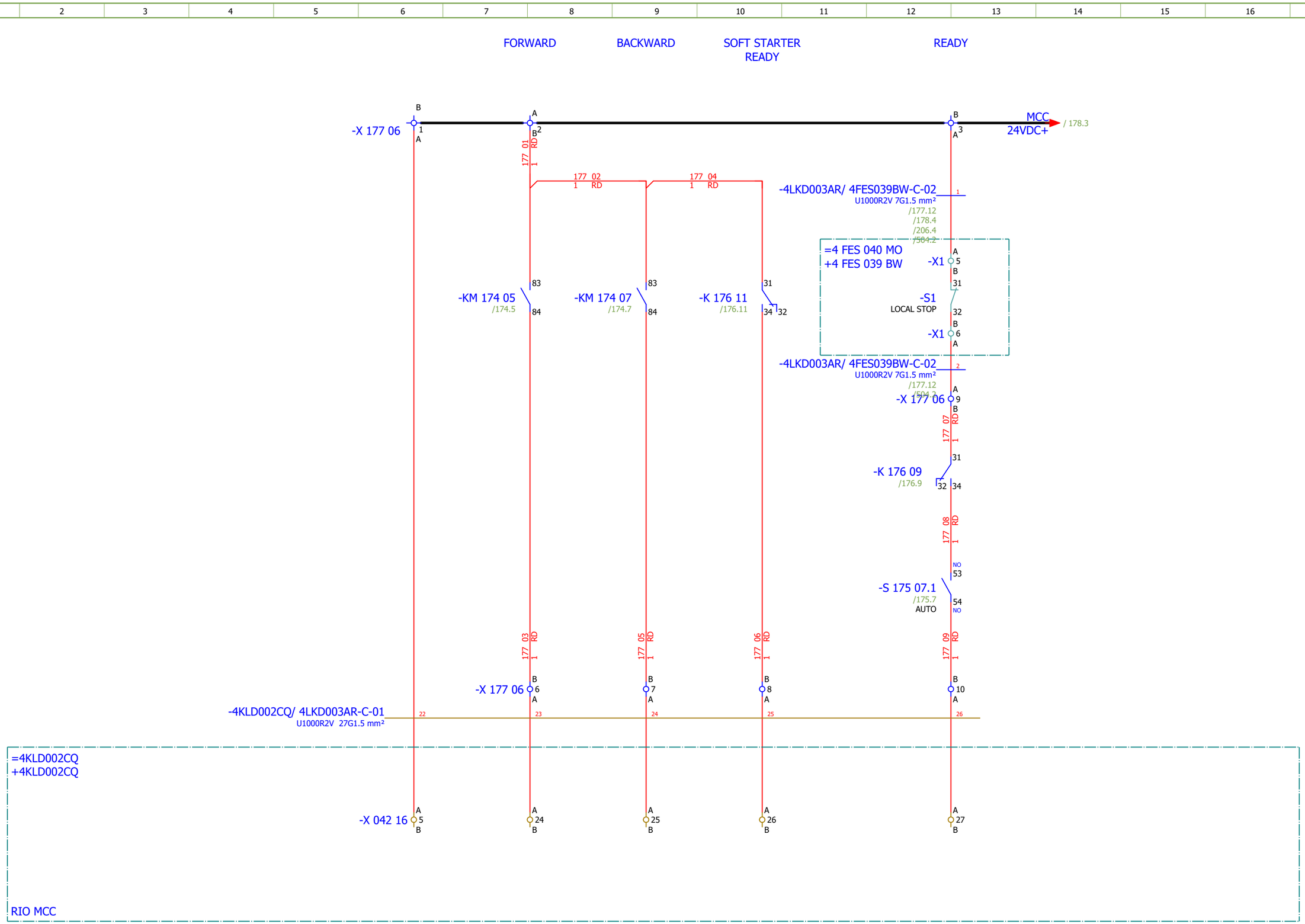

Date:	17.03.2026.	SINTAKSA A Voith Company	Client: ANDRITZ TEP d.o.o. Ulica 108. brigade ZNG 84, 35000 Slavonski Brod, Croatia	Scope: BOILER/LOW VOLTAGE CABINET BOILER (NORMAL) 3	Project: BRC-4	Unit & Issuer: ATEP0	Number: 1874	Revision: G	
Drawn:	Luka Božičević								#D
Approved:	Grga Kolić		Object: RDF Albioma Les Bois Rouge Reunion - France	Content: ASH CRUSHER BELOW SH 3 - SIGNALIZATION	Drawing designation: BRC-4-ATEP0-1874-G			=4LKD001AR	Sheet: 177
Format:	A3							+4LKD003AR	Next: 178

ASH CRUSHER BELOW SH 3
- "0" PULSE

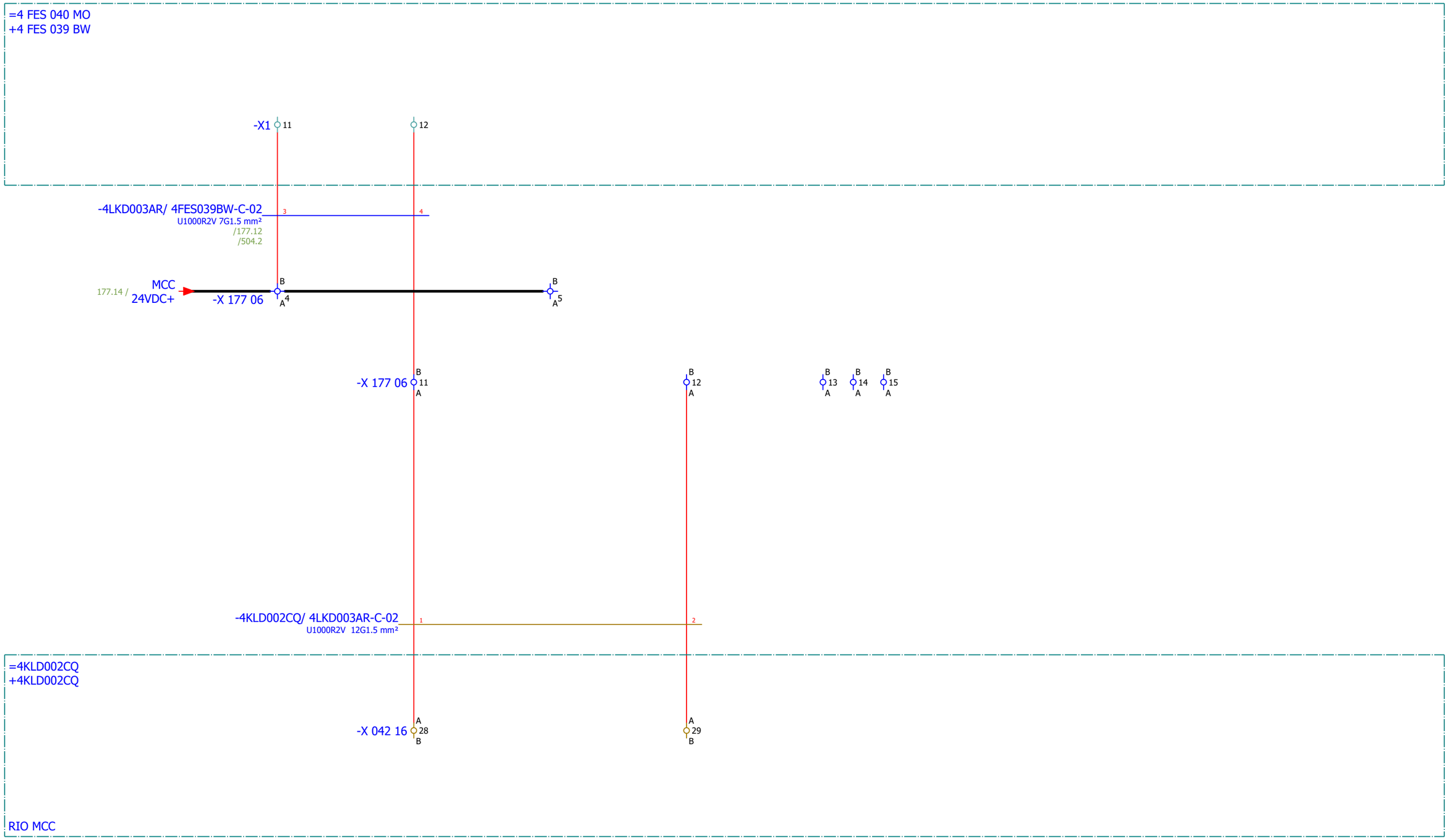

Date:	17.03.2026.	SINTAKSA A Voith Company	Client:	ANDRITZ TEP d.o.o. Ulica 108. brigade ZNG 84, 35000 Slavonski Brod, Croatia	Scope: BOILER/LOW VOLTAGE CABINET BOILER (NORMAL) 3	Project: BRC-4	Unit & Issuer: ATEP0	Number: 1874	Revision: G
Drawn:	Luka Božičević								#D
Approved:	Grga Kolić		Object:	RDF Albioma Les Bois Rouge Reunion - France	Content: ASH CRUSHER BELOW SH 3 - SIGNALIZATION	Drawing designation: BRC-4-ATEP0-1874-G		=4LKD001AR	Sheet: 178
Format:	A3							+4LKD003AR	Next: 179

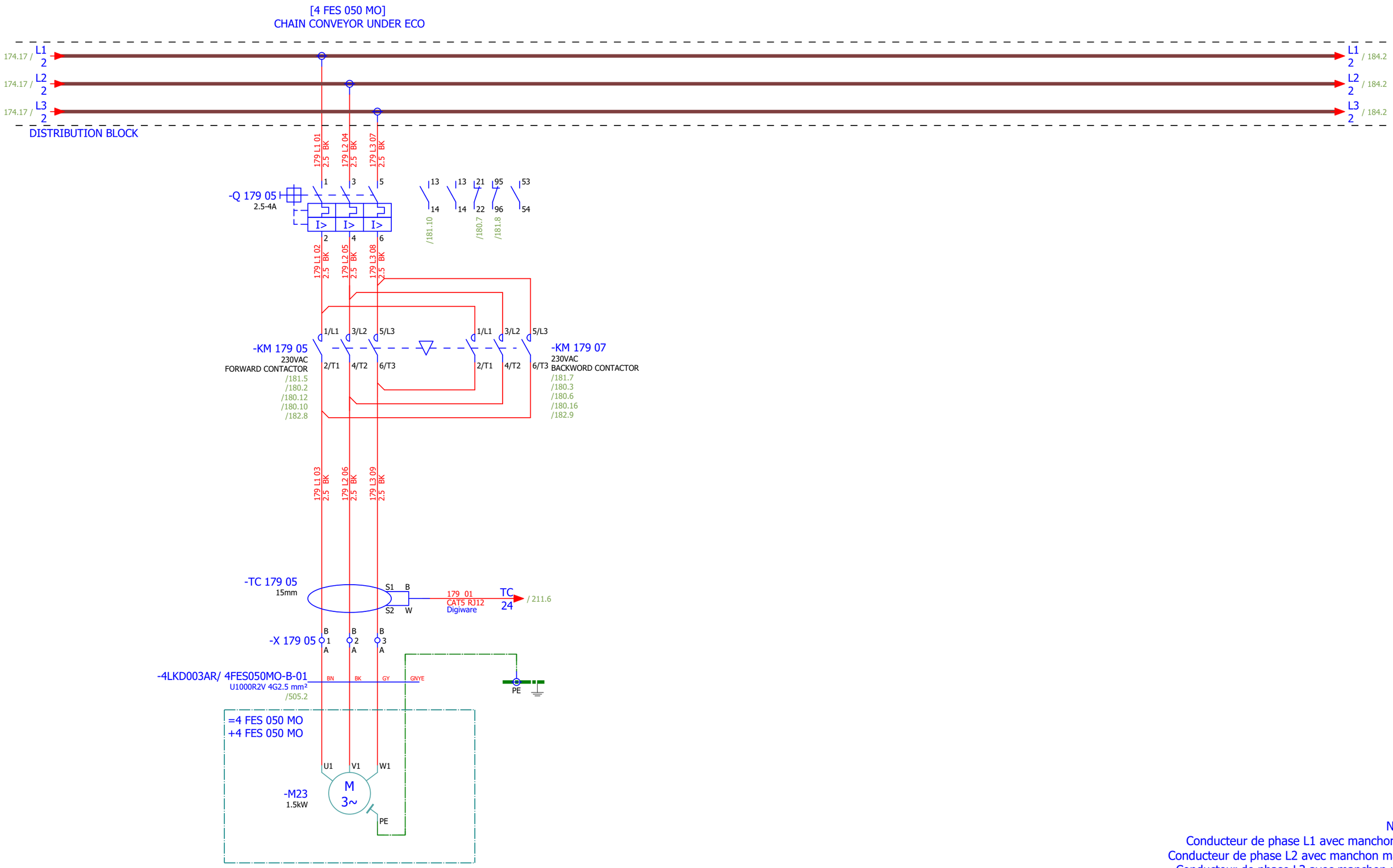

NOTE:
Conducteur de phase L1 avec manchon noir
Conducteur de phase L2 avec manchon marron
Conducteur de phase L3 avec manchon rouge

Date:	17.03.2026.	SINTAKSA A Voith Company	Client:	ANDRITZ TEP d.o.o. Ulica 108. brigade ZNG 84, 35000 Slavonski Brod, Croatia	Scope: BOILER/LOW VOLTAGE CABINET BOILER (NORMAL) 3	Project: BRC-4	Unit & Issuer: ATEP0	Number: 1874	Revision: G
Drawn:	Luka Božičević								#D
Approved:	Grga Kolić		Object:	RDF Albioma Les Bois Rouge Reunion - France	Content: CHAIN CONVEYOR UNDER ECO	Drawing designation: BRC-4-ATEP0-1874-G		=4LKD001AR	Sheet: 179
Format:	A3							+4LKD003AR	Next: 180

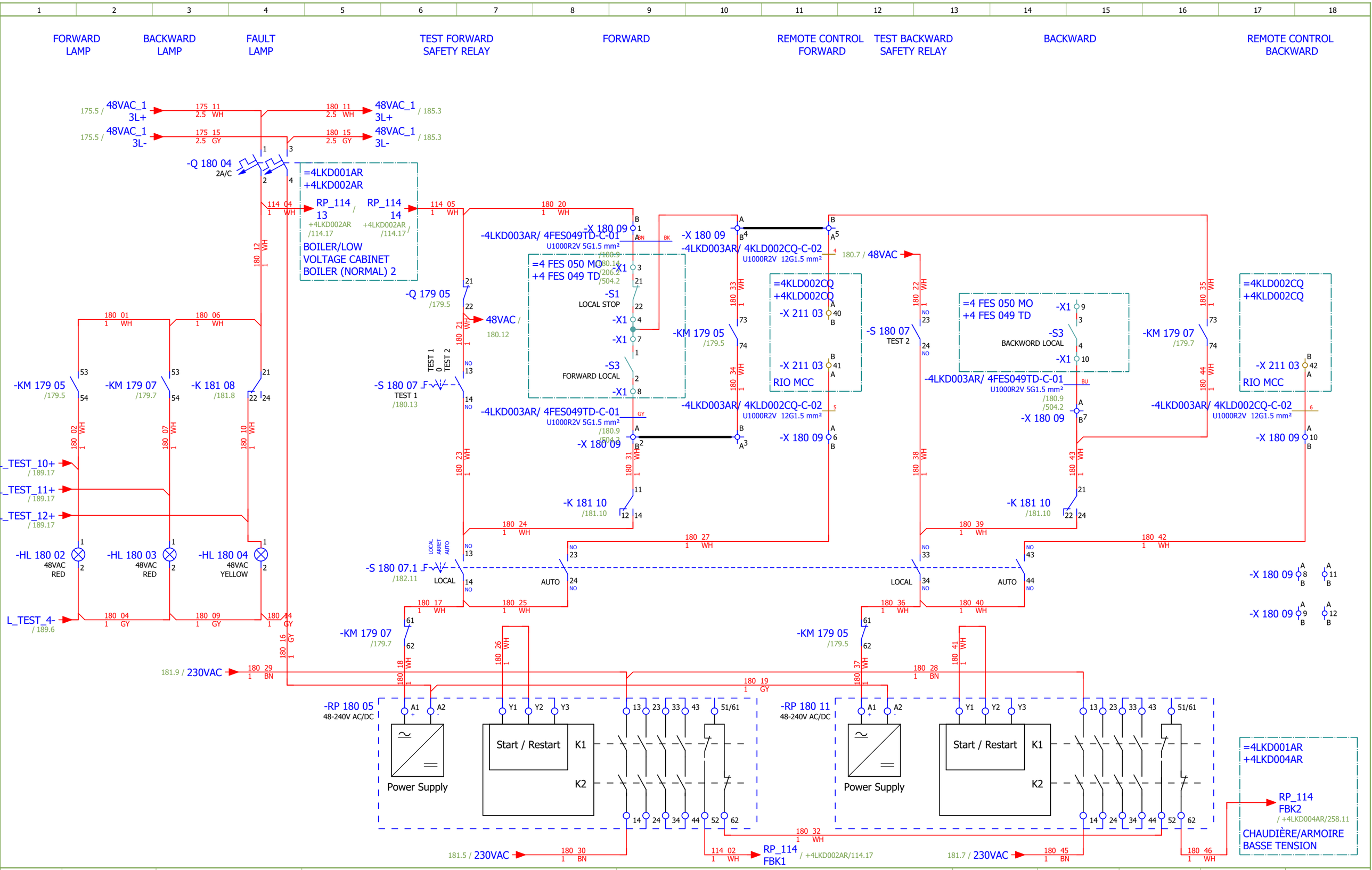

Date:	17.03.2026.	SINTAKSA A Voith Company	Client: ANDRITZ TEP d.o.o. Ulica 108. brigade ZNG 84, 35000 Slavonski Brod, Croatia	Scope: BOILER/LOW VOLTAGE CABINET BOILER (NORMAL) 3	Project: BRC-4	Unit & Issuer: ATEP0	Number: 1874	Revision: G	#D
Drawn:	Luka Božičević								
Approved:	Grga Kolić		Object: RDF Albioma Les Bois Rouge Reunion - France	Content: CHAIN CONVEYOR UNDER ECO - CONTROL	Drawing designation: BRC-4-ATEP0-1874-G			=4LKD001AR	Sheet: 180
Format:	A3							+4LKD003AR	Next: 181

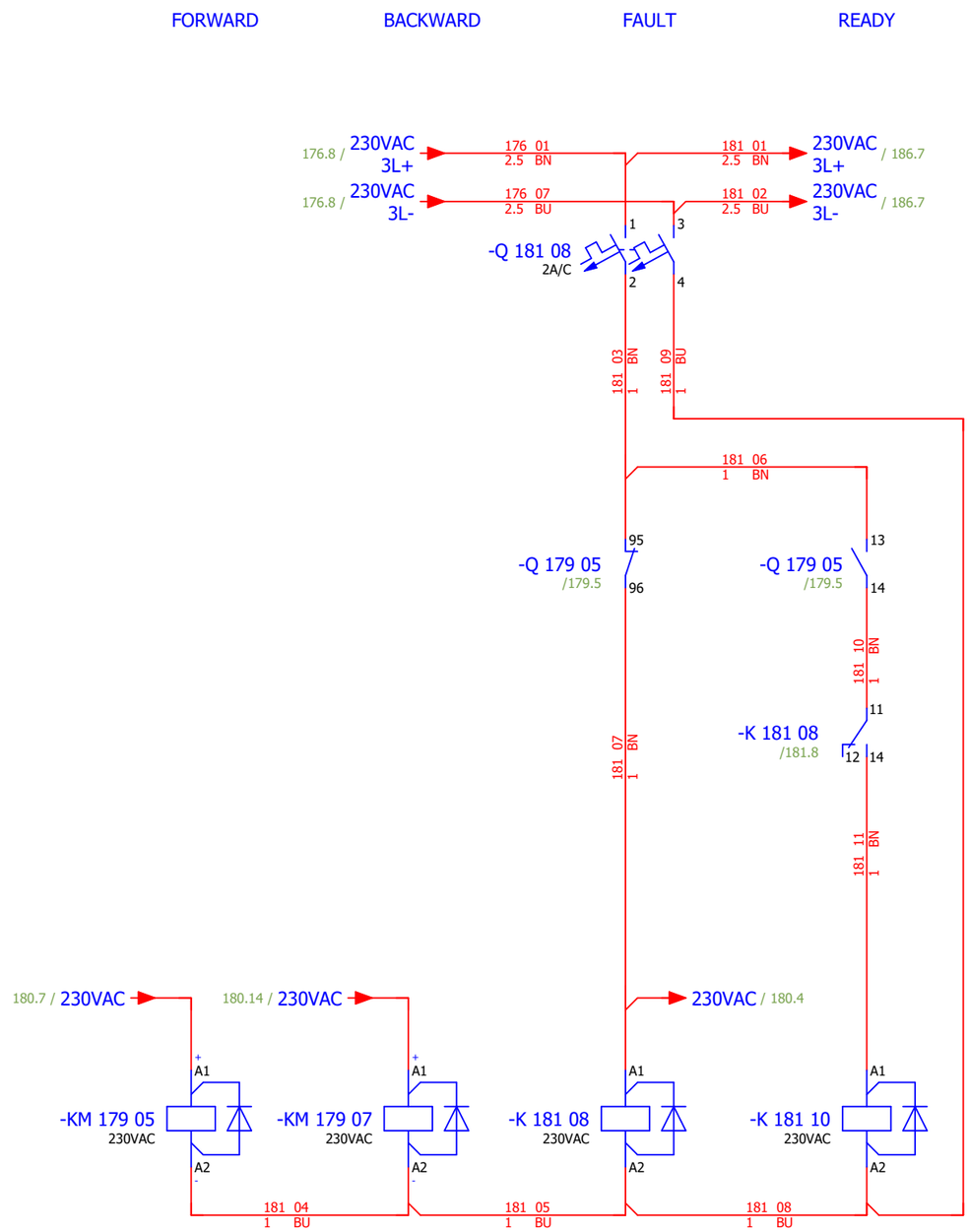

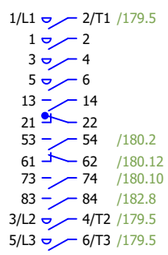

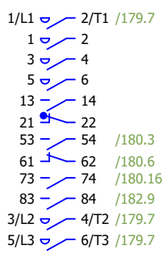

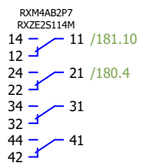

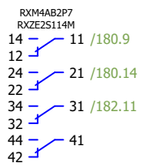

Date:	17.03.2026.	SINTAKSA A Voith Company	Client:	ANDRITZ TEP d.o.o. Ulica 108. brigade ZNG 84, 35000 Slavonski Brod, Croatia	Scope:	BOILER/LOW VOLTAGE CABINET BOILER (NORMAL) 3	Project: BRC-4	Unit & Issuer: ATEP0	Number: 1874	Revision: G
Drawn:	Luka Božičević									#D
Approved:	Grga Kolić		Object:	RDF Albioma Les Bois Rouge Reunion - France	Content:	CHAIN CONVEYOR UNDER ECO - CONTROL	Drawing designation: BRC-4-ATEP0-1874-G			=4LKD001AR
Format:	A3									+4LKD003AR

Sheet: 181
Next: 182

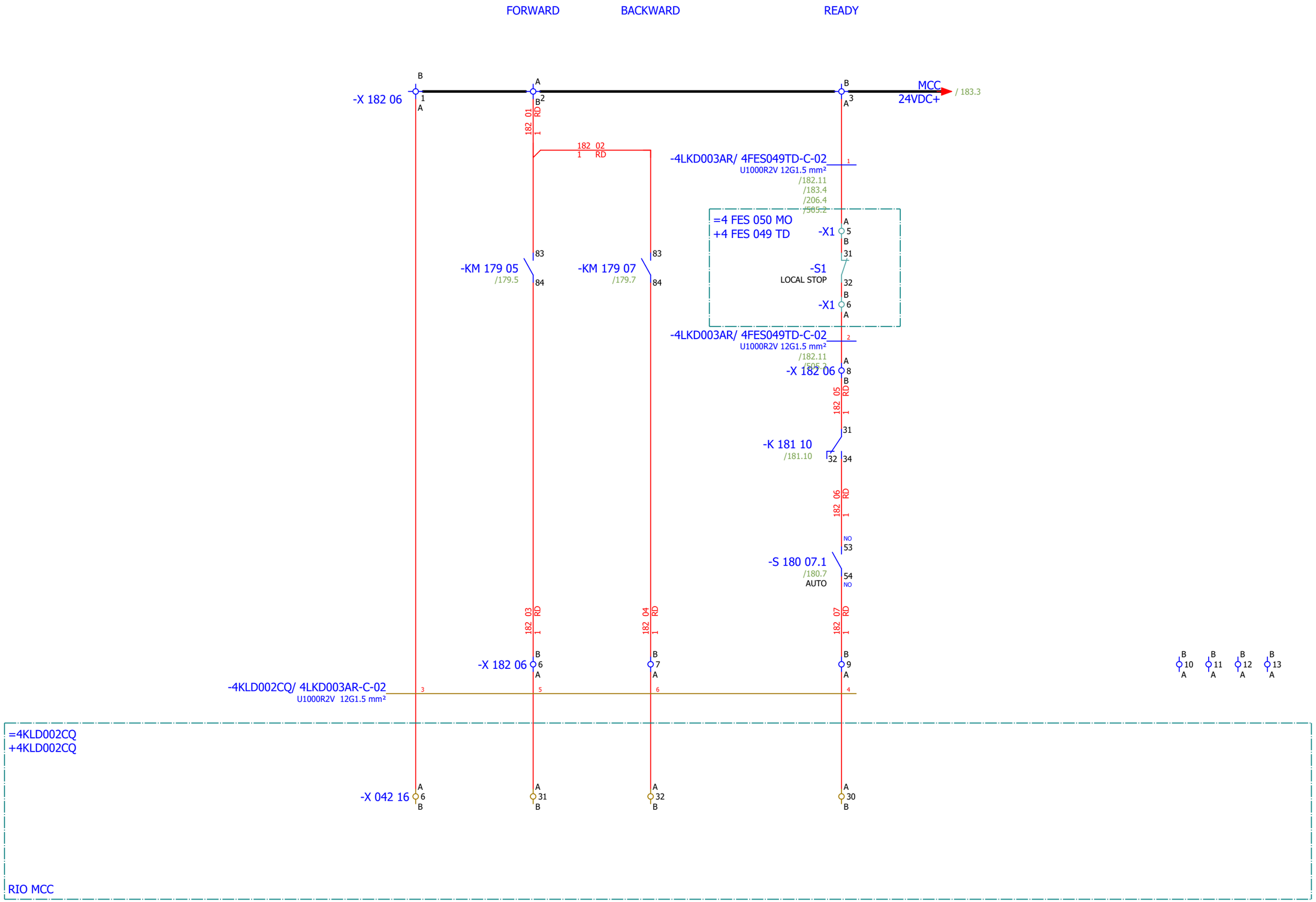

Date:	17.03.2026.	SINTAKSA A Voith Company	Client:	ANDRITZ TEP d.o.o. Ulica 108. brigade ZNG 84, 35000 Slavonski Brod, Croatia	Scope: BOILER/LOW VOLTAGE CABINET BOILER (NORMAL) 3	Project: BRC-4	Unit & Issuer: ATEP0	Number: 1874	Revision: G
Drawn:	Luka Božičević								#D
Approved:	Grga Kolić		Object:	RDF Albioma Les Bois Rouge Reunion - France	Content: CHAIN CONVEYOR UNDER ECO - SIGNALIZATION	Drawing designation: BRC-4-ATEP0-1874-G		=4LKD001AR	Sheet: 182
Format:	A3							+4LKD003AR	Next: 183

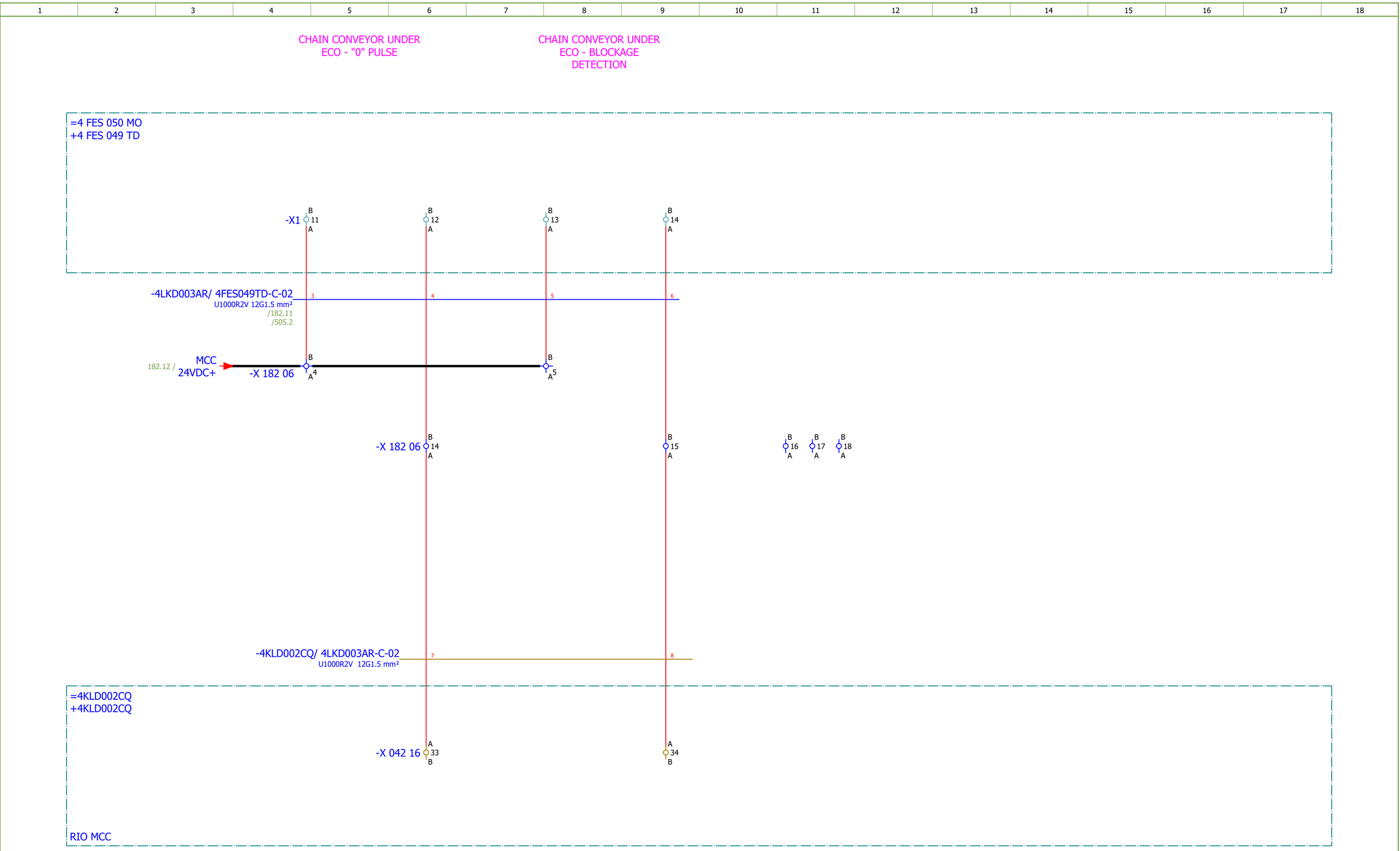

Date:	17.03.2026.	SINTAKSA A Voith Company	Client:	ANDRITZ TEP d.o.o. Ulica 108. brigade ZNG 84, 35000 Slavonski Brod, Croatia	Scope: BOILER/LOW VOLTAGE CABINET BOILER (NORMAL) 3	Project: BRC-4	Unit & Issuer: ATEP0	Number: 1874	Revision: G
Drawn:	Luka Božičević								#D
Approved:	Grga Kolić		Object:	RDF Albioma Les Bois Rouge Reunion - France	Content: CHAIN CONVEYOR UNDER ECO - SIGNALIZATION	Drawing designation: BRC-4-ATEP0-1874-G		=4LKD001AR	Sheet: 183
Format:	A3							+4LKD003AR	Next: 184

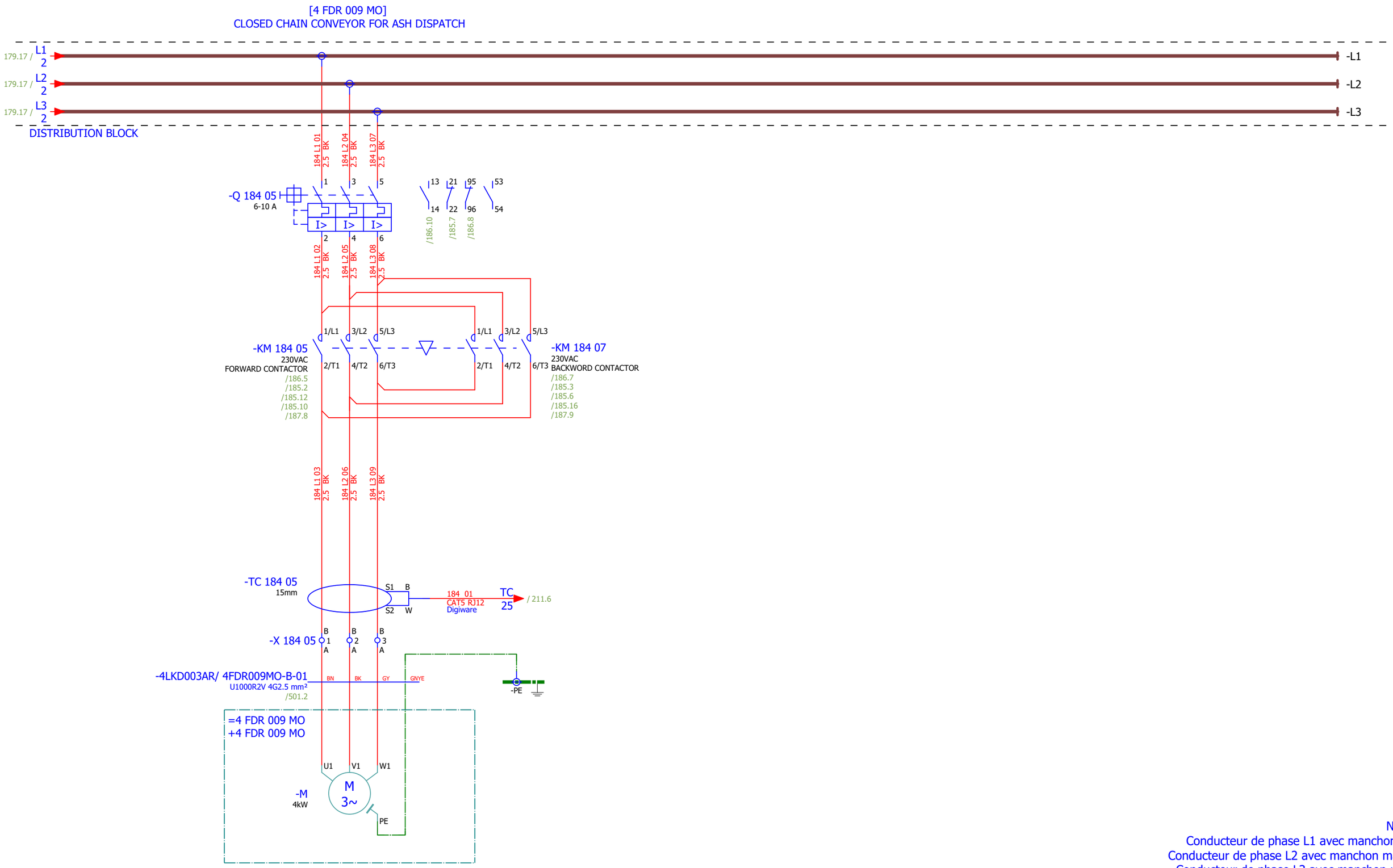

NOTE:
Conducteur de phase L1 avec manchon noir
Conducteur de phase L2 avec manchon marron
Conducteur de phase L3 avec manchon rouge

Date:	17.03.2026.	SINTAKSA A Voith Company	Client:	ANDRITZ TEP d.o.o. Ulica 108. brigade ZNG 84, 35000 Slavonski Brod, Croatia	Scope: BOILER/LOW VOLTAGE CABINET BOILER (NORMAL) 3	Project: BRC-4	Unit & Issuer: ATEP0	Number: 1874	Revision: G
Drawn:	Luka Božičević								#D
Approved:	Grga Kolić		Object:	RDF Albioma Les Bois Rouge Reunion - France	Content: CLOSED CHAIN CONVEYOR FOR ASH DISPATCH	Drawing designation: BRC-4-ATEP0-1874-G			=4LKD001AR
Format:	A3								+4LKD003AR

Sheet: 184
Next: 185

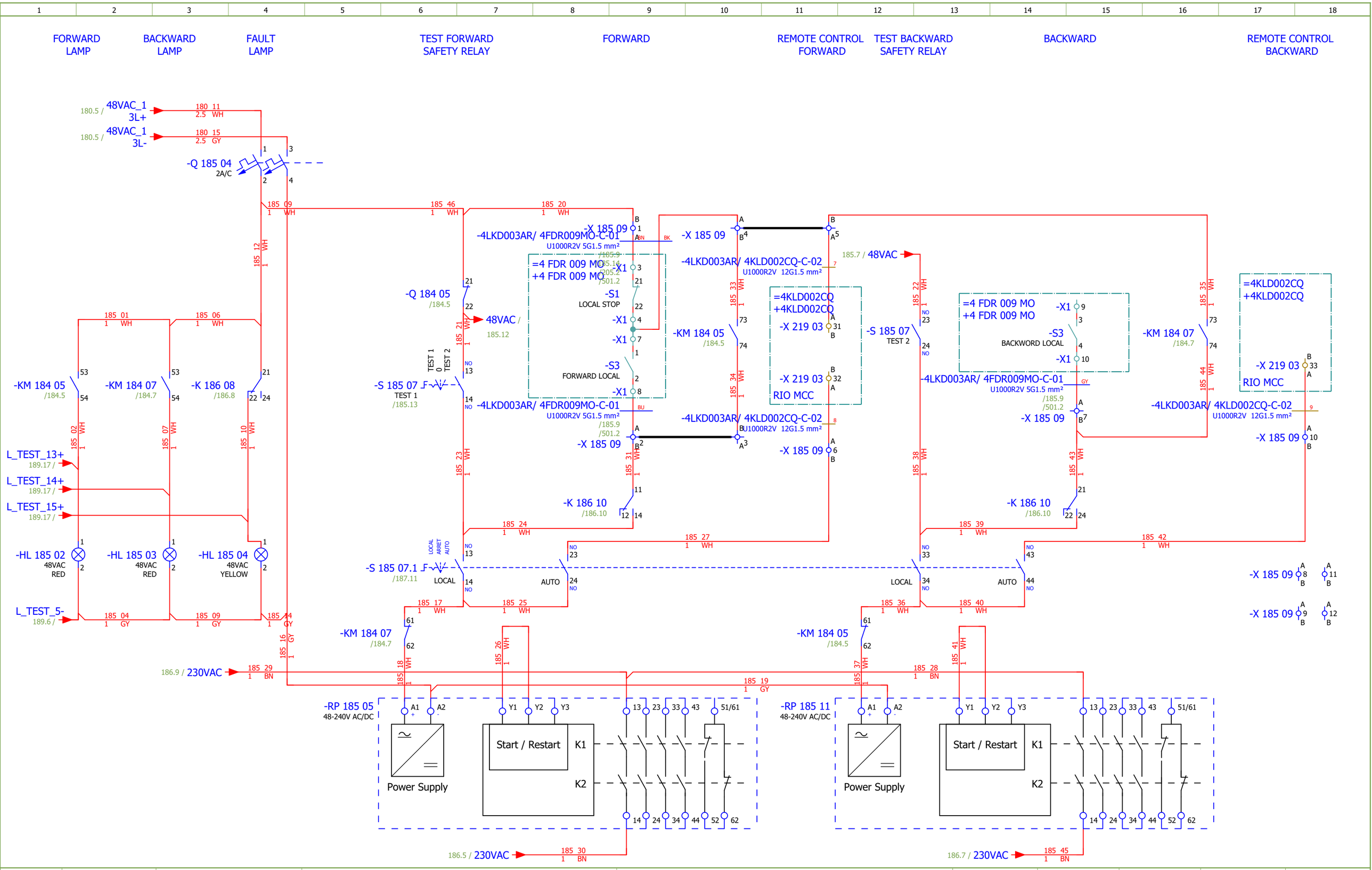

Date:	17.03.2026.	SINTAKSA A Voith Company	Client: ANDRITZ TEP d.o.o. Ulica 108. brigade ZNG 84, 35000 Slavonski Brod, Croatia	Scope: BOILER/LOW VOLTAGE CABINET BOILER (NORMAL) 3	Project: BRC-4	Unit & Issuer: ATEP0	Number: 1874	Revision: G	
Drawn:	Luka Božičević								#D
Approved:	Grga Kolić		Object: RDF Albioma Les Bois Rouge Reunion - France	Content: CLOSED CHAIN CONVEYOR FOR ASH DISPATCH - CONTROL	Drawing designation: BRC-4-ATEP0-1874-G			=4LKD001AR	Sheet: 185
Format:	A3							+4LKD003AR	Next: 186

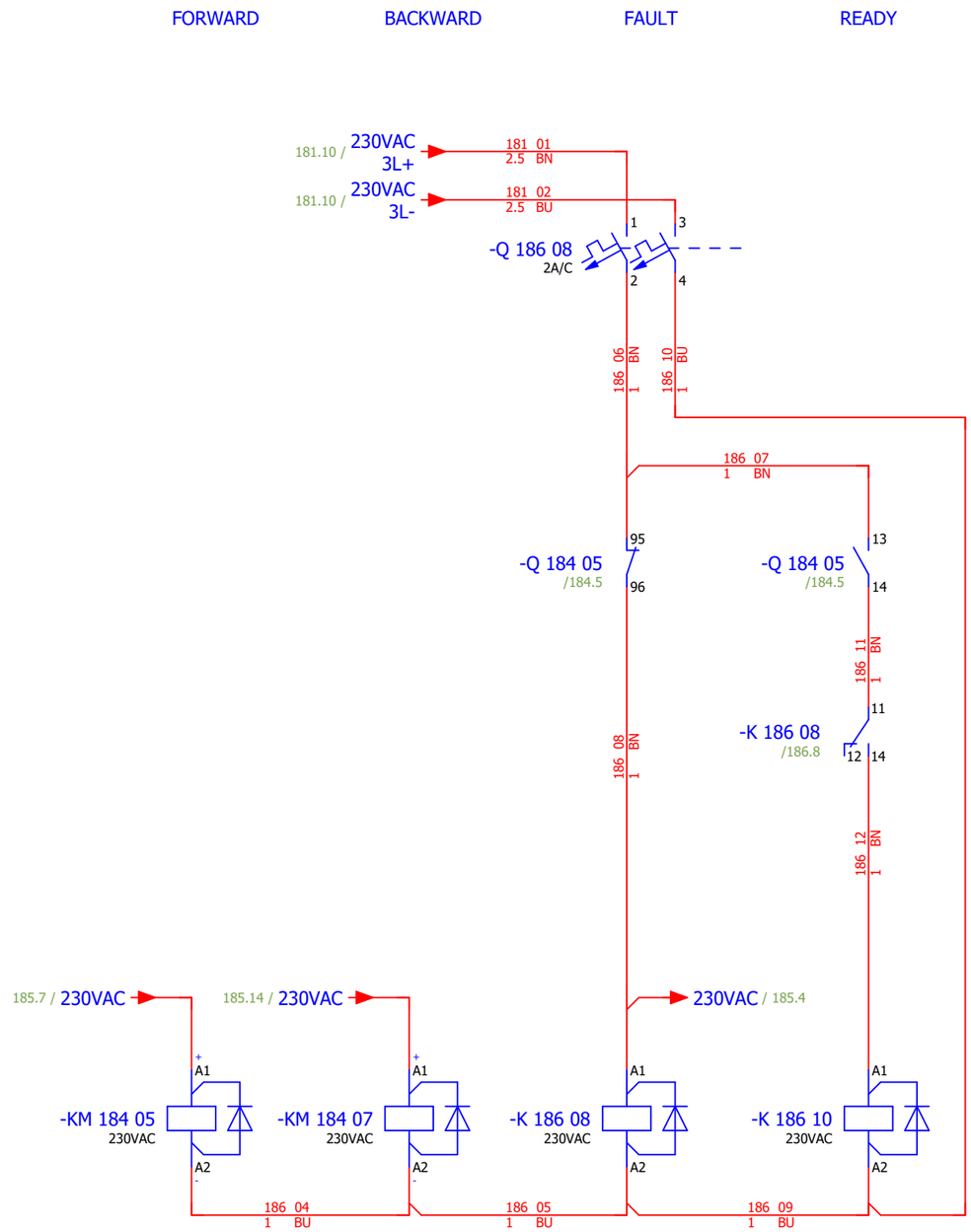

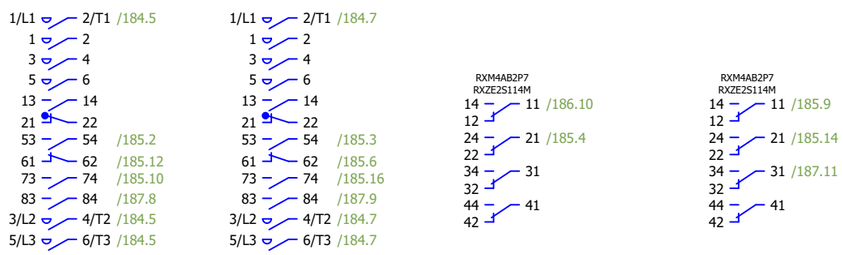

Date:	17.03.2026.	SINTAKSA A Voith Company	Client:	ANDRITZ TEP d.o.o. Ulica 108. brigade ZNG 84, 35000 Slavonski Brod, Croatia	Scope:	BOILER/LOW VOLTAGE CABINET BOILER (NORMAL) 3	Project: BRC-4	Unit & Issuer: ATEP0	Number: 1874	Revision: G	#D
Drawn:	Luka Božičević										
Approved:	Grga Kolić		Object:	RDF Albioma Les Bois Rouge Reunion - France	Content:	CLOSED CHAIN CONVEYOR FOR ASH DISPATCH - CONTROL	Drawing designation: BRC-4-ATEP0-1874-G			=4LKD001AR	Sheet: 186
Format:	A3									+4LKD003AR	Next: 187

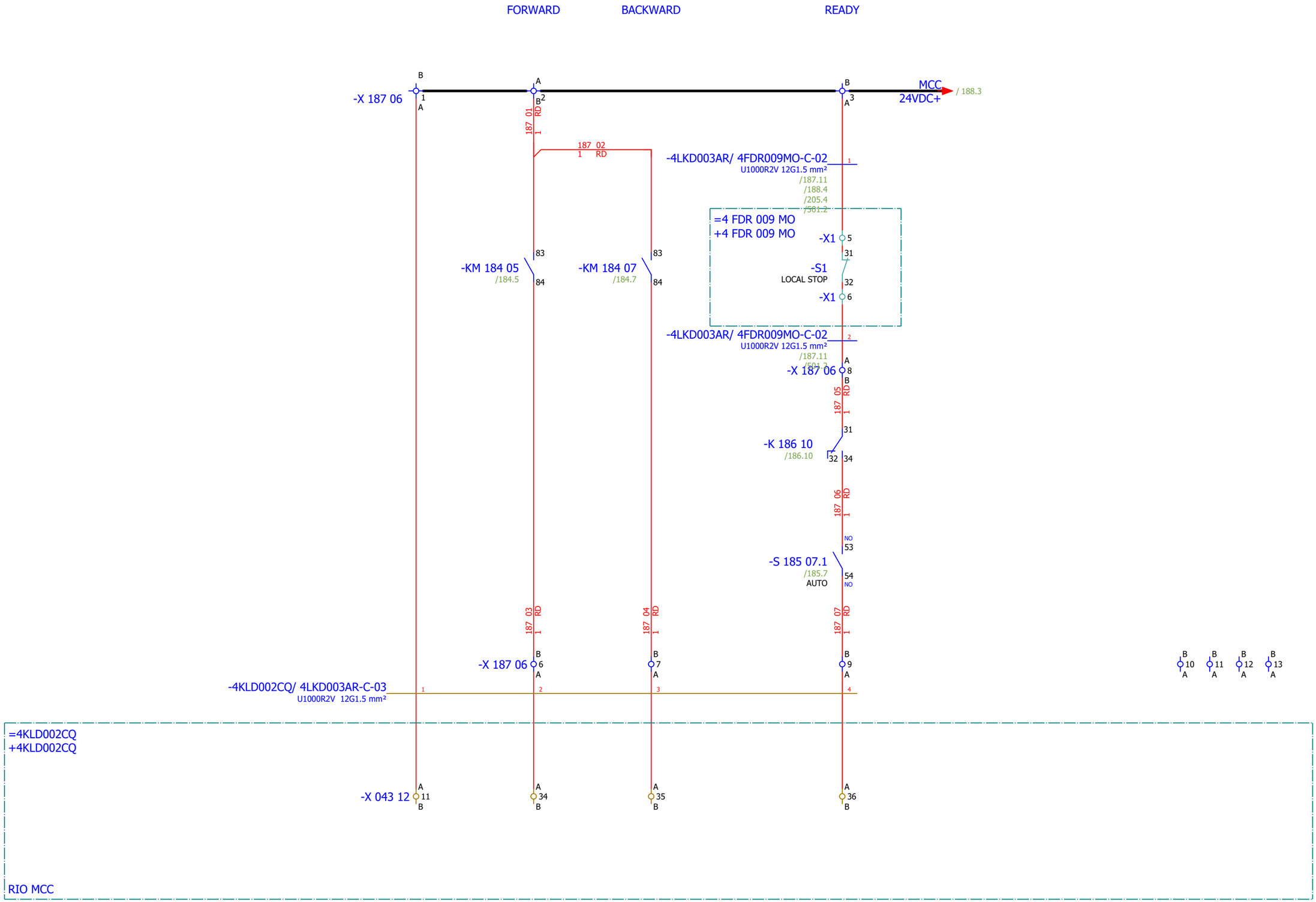

Date:	17.03.2026.	SINTAKSA A Voith Company	Client:	ANDRITZ TEP d.o.o. Ulica 108. brigade ZNG 84, 35000 Slavonski Brod, Croatia	Scope:	BOILER/LOW VOLTAGE CABINET BOILER (NORMAL) 3	Project: BRC-4	Unit & Issuer: ATEP0	Number: 1874	Revision: G
Drawn:	Luka Božičević									#D
Approved:	Grga Kolić		Object:	RDF Albioma Les Bois Rouge Reunion - France	Content:	CLOSED CHAIN CONVEYOR FOR ASH DISPATCH - SIGNALISATION	Drawing designation: BRC-4-ATEP0-1874-G		=4LKD001AR	Sheet: 187
Format:	A3								+4LKD003AR	Next: 188

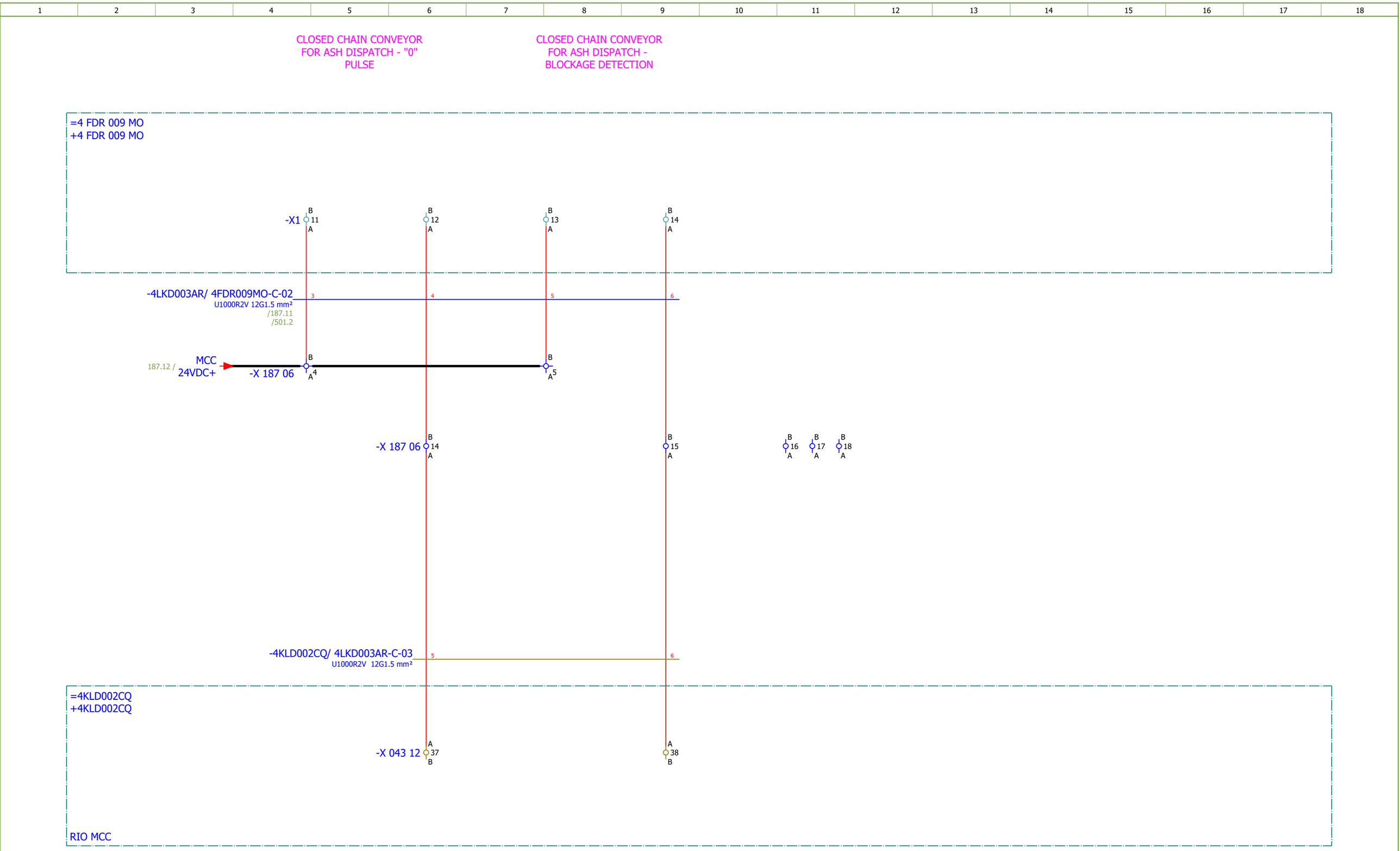

Date:	17.03.2026.	SINTAKSA A Voith Company	Client:	ANDRITZ TEP d.o.o. Ulica 108. brigade ZNG 84, 35000 Slavonski Brod, Croatia	Scope: BOILER/LOW VOLTAGE CABINET BOILER (NORMAL) 3	Project: BRC-4	Unit & Issuer: ATEP0	Number: 1874	Revision: G
Drawn:	Luka Božičević								#D
Approved:	Grga Kolić		Object:	RDF Albioma Les Bois Rouge Reunion - France	Content: CLOSED CHAIN CONVEYOR FOR ASH DISPATCH - SIGNALISATION	Drawing designation: BRC-4-ATEP0-1874-G		=4LKD001AR	Sheet: 188
Format:	A3							+4LKD003AR	Next: 189

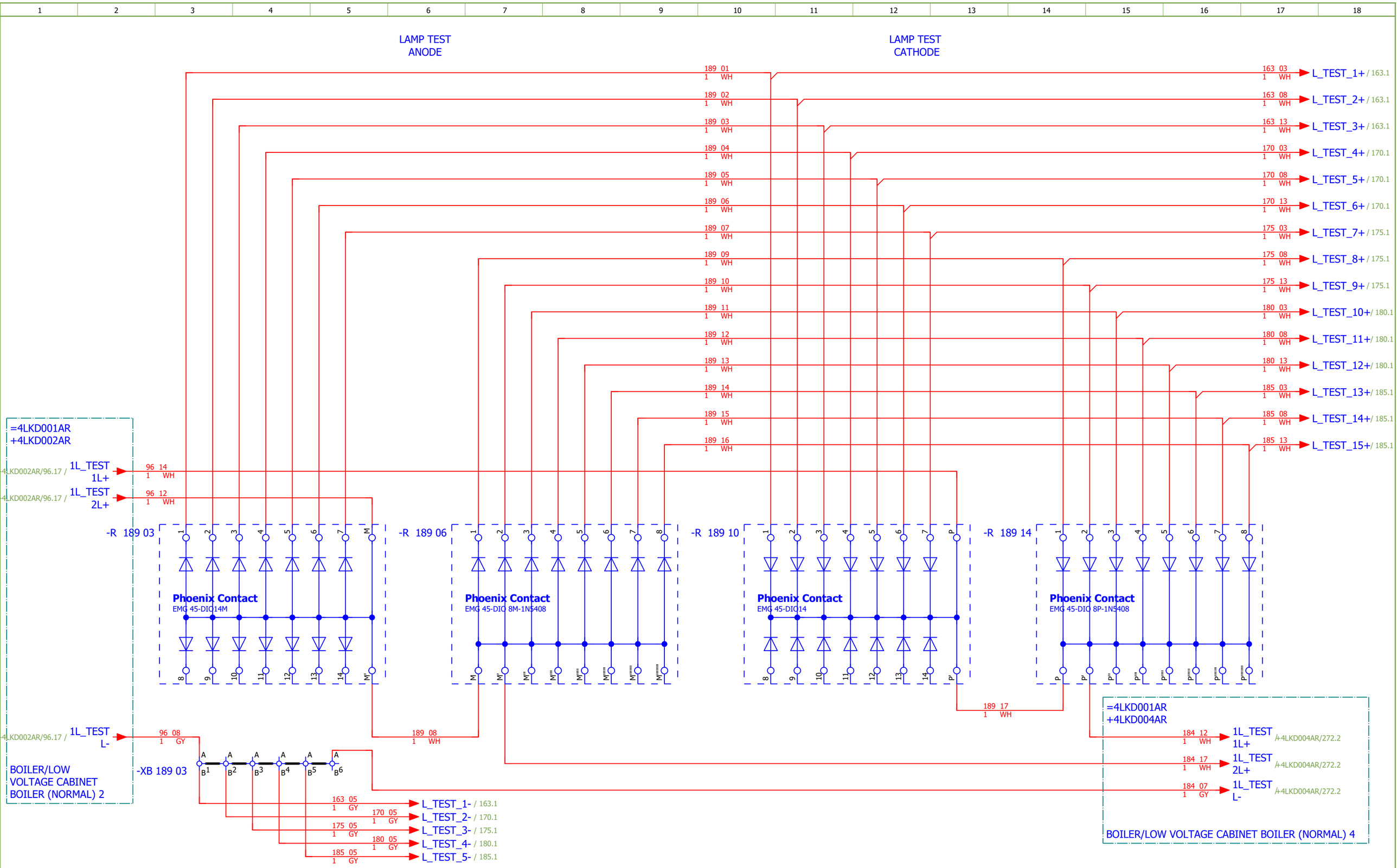

Date:	17.03.2026.	SINTAKSA A Voith Company	Client: ANDRITZ TEP d.o.o. Ulica 108. brigade ZNG 84, 35000 Slavonski Brod, Croatia	Scope: BOILER/LOW VOLTAGE CABINET BOILER (NORMAL) 3	Project: BRC-4	Unit & Issuer: ATEP0	Number: 1874	Revision: G	#D
Drawn:	Luka Božičević								
Approved:	Grga Kolić		Object: RDF Albioma Les Bois Rouge Reunion - France	Content: LAMP TEST	Drawing designation: BRC-4-ATEP0-1874-G			=4LKD001AR	Sheet: 189
Format:	A3							+4LKD003AR	Next: 201

NORMAL POWERED MCC -
SECTION 3 CB ON

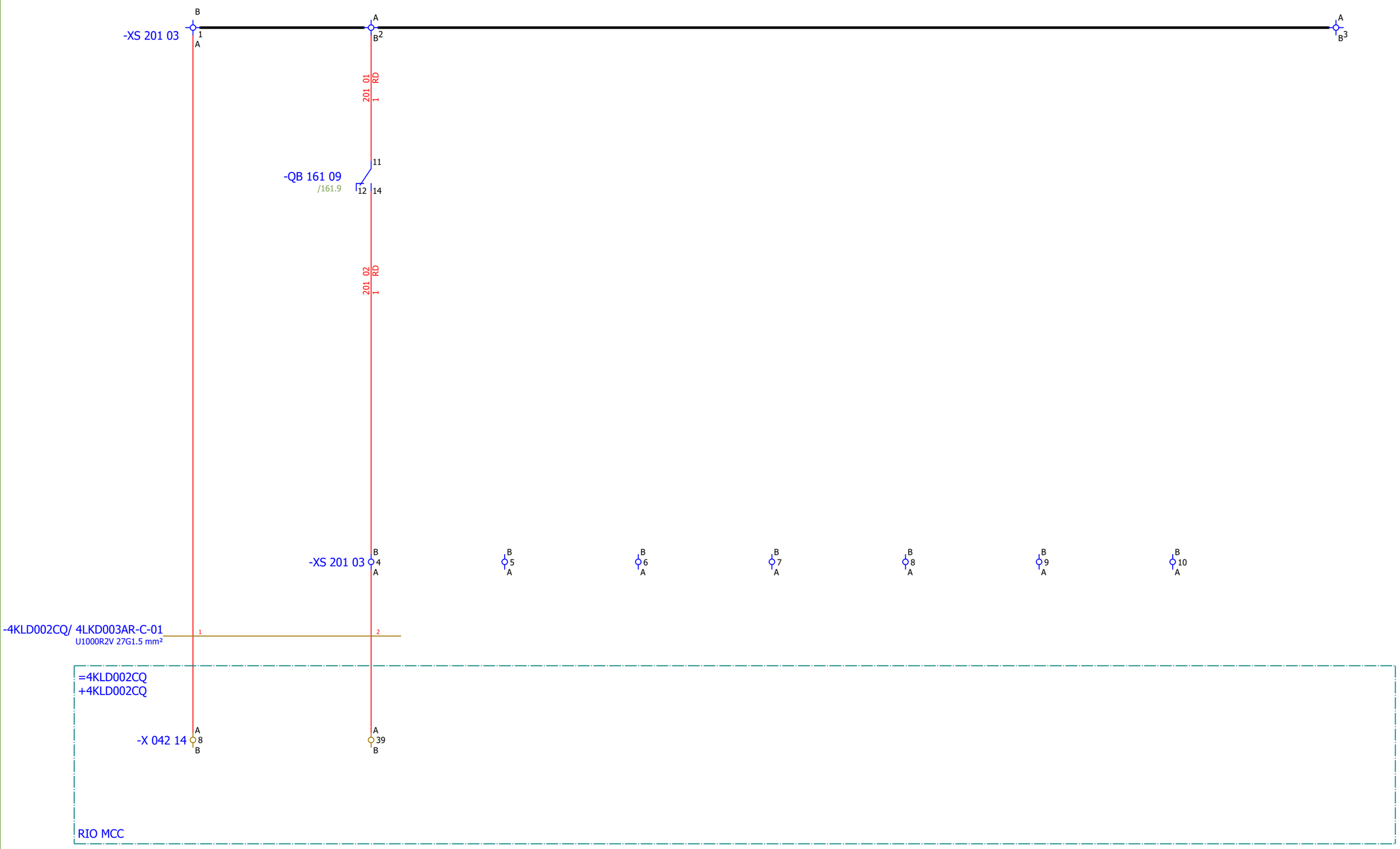

Date:	17.03.2026.	SINTAKSA A Voith Company	Client:	ANDRITZ TEP d.o.o. Ulica 108. brigade ZNG 84, 35000 Slavonski Brod, Croatia	Scope: BOILER/LOW VOLTAGE CABINET BOILER (NORMAL) 3	Project: BRC-4	Unit & Issuer: ATEP0	Number: 1874	Revision: G
Drawn:	Luka Božičević								#QA
Approved:	Grga Kolić		Object:	RDF Albioma Les Bois Rouge Reunion - France	Content: SIGNALIZATION	Drawing designation: BRC-4-ATEP0-1874-G		=4LKD001AR	Sheet: 201
Format:	A3							+4LKD003AR	Next: 205

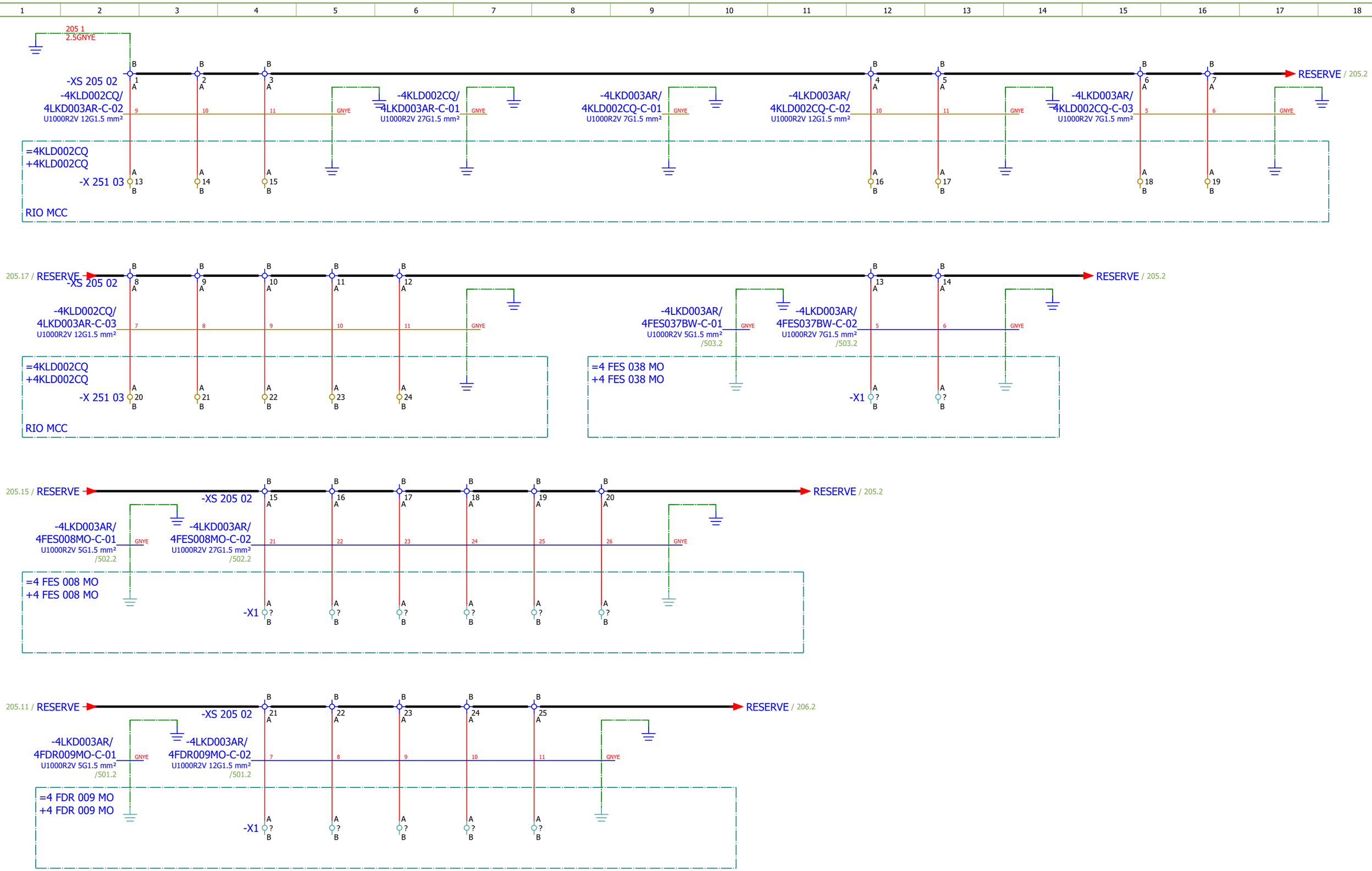

Date:	17.03.2026.	SINTAKSA A Voith Company	Client:	ANDRITZ TEP d.o.o. Ulica 108. brigade ZNG 84, 35000 Slavonski Brod, Croatia	Scope: BOILER/LOW VOLTAGE CABINET BOILER (NORMAL) 3	Project: BRC-4	Unit & Issuer: ATEP0	Number: 1874	Revision: G
Drawn:	Luka Božičević								#QB
Approved:	Grga Kolić		Object:	RDF Albioma Les Bois Rouge Reunion - France	Content: SPARE	Drawing designation: BRC-4-ATEP0-1874-G		=4LKD001AR	Sheet: 205
Format:	A3							+4LKD003AR	Next: 206

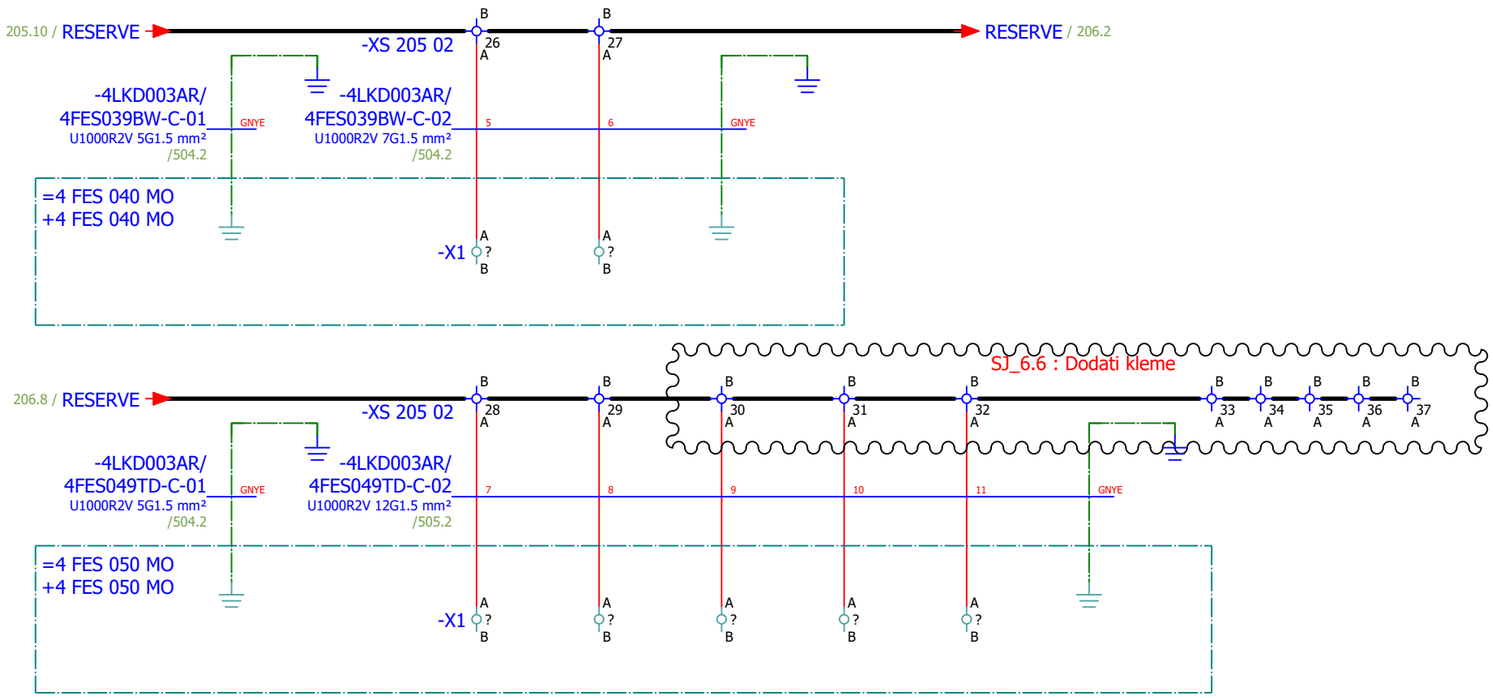

Date:	17.03.2026.	SINTAKSA A Voith Company	Client:	ANDRITZ TEP d.o.o. Ulica 108. brigade ZNG 84, 35000 Slavonski Brod, Croatia	Scope: BOILER/LOW VOLTAGE CABINET BOILER (NORMAL) 3	Project: BRC-4	Unit & Issuer: ATEP0	Number: 1874	Revision: G
Drawn:	Luka Božičević								#QB
Approved:	Grga Kolić		Object:	RDF Albioma Les Bois Rouge Reunion - France	Content: SPARE	Drawing designation: BRC-4-ATEP0-1874-G			=4LKD001AR
Format:	A3								+4LKD003AR

Sheet: 206
Next: 211

MEASUREMENT

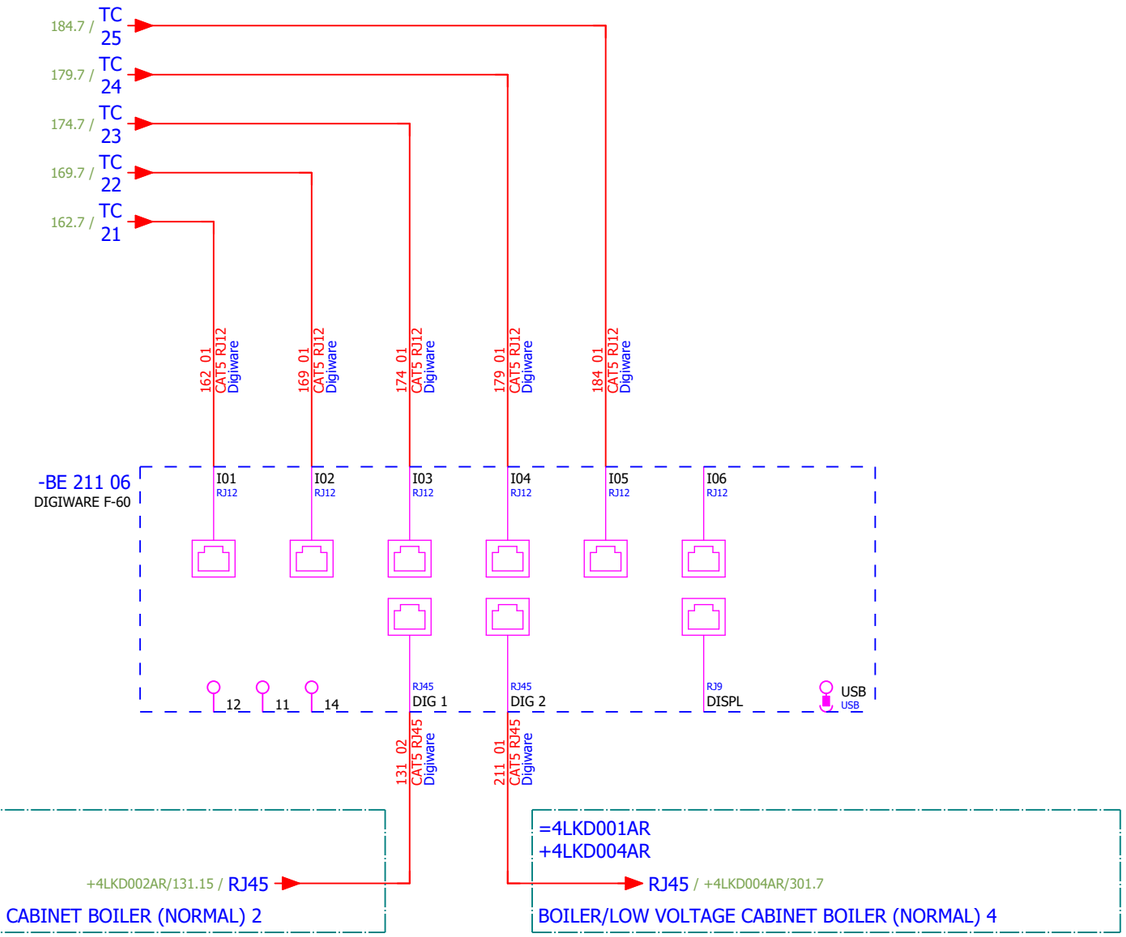

Date:	17.03.2026.	SINTAKSA A Voith Company	Client:	ANDRITZ TEP d.o.o. Ulica 108. brigade ZNG 84, 35000 Slavonski Brod, Croatia	Scope: BOILER/LOW VOLTAGE CABINET BOILER (NORMAL) 3	Project: BRC-4	Unit & Issuer: ATEP0	Number: 1874	Revision: G
Drawn:	Luka Božičević								#V
Approved:	Grga Kolić		Object:	RDF Albioma Les Bois Rouge Reunion - France	Content: COMMUNICATION	Drawing designation: BRC-4-ATEP0-1874-G			=4LKD001AR
Format:	A3								+4LKD003AR

Sheet: 211
Next: 401

Sorting number	Part number	Quantity	Manufacturer	Device	Device description	Device designation
1.	SOC.47290126	1	Socomec	Module location default ISOM DIGIWARE F-60	Network type - Power distribution, Control circuits, Medical Rated voltage - 24 VDC Type - Insulation Fault Locator Indication - Digital	-BE 211 06
2.	SE.ZB4BVBG1	15	Schneider Electric	white light block with body/fixing collar integral LED 24...120VAC/DC		-HL 163 02...-HL 163 04;-HL 170 02...-HL 170 04;-HL 175 02...-HL 175 04;-HL 180 02...-HL 180 04;-HL 185 02...-HL 185 04
3.	SE.ZB4BV043	10	Schneider Electric	Red pilot light head Ø22 plain lens for integral LED	Complete body light block assembly, Harmony XB4, metal, universal LED, body fixing collar, 24...120V AC DC Head for pilot light: Red	-HL 163 02;-HL 163 03;-HL 170 02;-HL 170 03;-HL 17 5 02;-HL 175 03;-HL 180 02;-HL 180 03;-HL 185 02;-H L 185 03
4.	SE.ZBZ32	15	Schneider Electric	Harmony XB4	Legend holder, plastic	-HL 163 02...-HL 163 04;-HL 170 02...-HL 170 04;-HL 175 02...-HL 175 04;-HL 180 02...-HL 180 04;-HL 185 02...-HL 185 04
5.	SE.ZB4BV053	5	Schneider Electric	Orange pilot light head Ø22 plain lens for integral LED	Complete body light block assembly, Harmony XB4, metal, universal LED, body fixing collar, 24...120V AC DC Head for pilot light: Orange	-HL 163 04;-HL 170 04;-HL 175 04;-HL 180 04;-HL 18 5 04
6.	SE.RXM4AB2P7	12	Schneider Electric	Miniature Plug-in relay - Zelio RXM 4 C/O 230 V AC 6 A with LED	Miniature Plug-in relay - Zelio RXM 4 C/O 230 V AC 6 A with LED	-K 164 08;-K 164 10;-K 171 07;-K 171 09;-K 171 11;-K 176 07;-K 176 09;-K 176 11;-K 181 08;-K 181 10;-K 1 86 08;-K 186 10
7.	SE.RXZE2S114M	12	Schneider Electric	Socket	For RXM2/RXM4 relays Screw connectors Separate contact 4 C/O	-K 164 08;-K 164 10;-K 171 07;-K 171 09;-K 171 11;-K 176 07;-K 176 09;-K 176 11;-K 181 08;-K 181 10;-K 1 86 08;-K 186 10
8.	SE.RXM041FU7	12	Schneider Electric	Protection module	RC circuit - 110..240 V AC - for RPZ/RXZ sockets	-K 164 08;-K 164 10;-K 171 07;-K 171 09;-K 171 11;-K 176 07;-K 176 09;-K 176 11;-K 181 08;-K 181 10;-K 1 86 08;-K 186 10
9.	SE.LC1D12P7	10	Schneider Electric	Contactor TeSys LC1-D - 3P - AC-3 440V 12 A, Coil 230 V AC	Contactor TeSys LC1-D - 3P - AC-3 440V 18 A, Coil 230 V AC	-KM 162 05;-KM 162 07;-KM 169 05;-KM 169 07;-KM 1 74 05;-KM 174 07;-KM 179 05;-KM 179 07;-KM 184 05 ;-KM 184 07
10.	SE.LADN31	10	Schneider Electric	Auxiliary contact block TeSys - 3 NO + 1 NC,screw-clamps terminals	Auxiliary contact block TeSys - 3 NO + 1 NC,screw-clamps terminals	-KM 162 05;-KM 162 07;-KM 169 05;-KM 169 07;-KM 1 74 05;-KM 174 07;-KM 179 05;-KM 179 07;-KM 184 05 ;-KM 184 07
11.	SE.LAD4RCU	10	Schneider Electric	RC Transient Suppressor 110 TO 250 VAC	RC Transient Suppressor 110 TO 250 VAC	-KM 162 05;-KM 162 07;-KM 169 05;-KM 169 07;-KM 1 74 05;-KM 174 07;-KM 179 05;-KM 179 07;-KM 184 05 ;-KM 184 07
12.	SE.LAD9R1V	5	Schneider Electric	Reversing mechanical interlock kit	Tesys D, reversing mechanical interlock kit, with electrical interlocking, for LC1D09 to LC1D38	-KM 162 05;-KM 169 05;-KM 174 05;-KM 179 05;-KM 1 84 05
13.	SE.GV2P16	1	Schneider Electric	Thermal Magnetic Motor Circuit Breaker TeSys GV2P - 3P - 9...14 A	Thermal Magnetic Motor Circuit Breaker TeSys GV2P - 3P - 9...14 A	-Q 162 05
14.	SE.GVAE11	5	Schneider Electric	Auxiliary contact block	1NO+1NC Front mounting For GV2	-Q 162 05;-Q 169 05;-Q 174 05;-Q 179 05;-Q 184 05
15.	SE.GVAD0110	5	Schneider Electric	TeSys GV AD0110 - auxiliary contact - 1 NO + 1 NC (fault)		-Q 162 05;-Q 169 05;-Q 174 05;-Q 179 05;-Q 184 05
16.	SE.A9F74202	10	Schneider Electric	2-pole MCB, 2A/C	Nominal current: 2 A Tripping curve: C	-Q 163 04;-Q 164 08;-Q 170 04;-Q 171 07;-Q 175 04;-Q 176 07;-Q 180 04;-Q 181 08;-Q 185 04;-Q 186 08
17.	SE.A9A26924	2	Schneider Electric	Auxiliary contact iOF, iC60	Auxiliary contact, Acti9, iOF, 1 OC, AC/DC	-Q 163 04;-Q 164 08

Sorting number	Part number	Quantity	Manufacturer	Device	Device description	Device designation
18.	SE.GV2P14	3	Schneider Electric	Motor circuit breaker	3-pole 6-10 A Thermal-magnetic	-Q 169 05;-Q 174 05;-Q 184 05
19.	SE.GV2P08	1	Schneider Electric	3-pole transformator protection circuit breaker		-Q 179 05
20.	SIE.3RW4024-1BB14	2	Siemens	SIRIUS Soft starter	SIRIUS soft starter S0 12.5 A, 5.5 kW/400 V, 40 °C 200-480 V AC, 110-230 V AC/DC Screw terminals	-QA 169 04;-QA 174 04
21.	SE.C10F3TM032	1	Schneider Electric	Circuit breaker, ComPacT NSX100B	36kA/415VAC 3 poles TMD trip unit 32A	-QB 161 09
22.	SE.29450	1	Schneider Electric	Auxiliary contact 1 OF or 1 SD or 1 SDE or 1 SDV	Auxiliary contact 1 OF or 1 SD or 1 SDE or 1 SDV	-QB 161 09
23.	SE.LV429337T	1	Schneider Electric	Direct rotary handle, ComPacT NSX 100/160/250, black handle, IP40	Direct rotary handle, ComPacT NSX 100/160/250, black handle, IP40	-QB 161 09
24.	SE.LVS04033	1	Schneider Electric	LINERGY DP	LINERGY DP 3P D.BLK/COMPACT 250A 27HOLES	-QB 161 09
25.	SE.LV429517	1	Schneider Electric	Insulation accessories 1 long terminal shield for breaker or plug-in base, 3P - NSX100...250	Insulation accessories 1 long terminal shield for breaker or plug-in base, 3P - NSX100...250	-QB 161 09
26.	PXC.2950129	1	Phoenix Contact	Component for protective circuit	Diode module, with 14 diodes, common anode, diode type 1N 4007	-R 189 03
27.	PXC.2954882	1	Phoenix Contact	Diode block	Diode module, with eight diodes, common anode, diode type 1N 5408	-R 189 06
28.	PXC.2950116	1	Phoenix Contact	Component for protective circuit	Diode module, with 14 diodes, common cathode, diode type 1N 4007	-R 189 10
29.	PXC.2954879	1	Phoenix Contact	Component for protective circuit	Diode module, with eight diodes, common cathode, diode type 1N 5408	-R 189 14
30.	SE.XPSBAC34AP	10	Schneider Electric	Safety module	Harmony Safety Automation Estop or guard ,Harmony XPS, connected to supply terminals 48-240 V AC/DC , no inputs, screw	-RP 163 05;-RP 163 11;-RP 170 06;-RP 170 12;-RP 17 5 05;-RP 175 11;-RP 180 05;-RP 180 11;-RP 185 05;-R P 185 11
31.	SE.XB4BD33	10	Schneider Electric	Selector switch, BLACK, 1-0-2, 2NO	Metal Black Ø22 3 positions 2 NO	-S 163 07;-S 163 07.1;-S 170 07;-S 170 07.1;-S 175 0 7;-S 175 07.1;-S 180 07;-S 180 07.1;-S 185 07;-S 185 07.1
32.	SE.ZBE101	15	Schneider Electric	Single contact block NO	Harmony XB4 Silver alloy 1 NO	-S 163 07.1;-S 170 07.1;-S 175 07.1;-S 180 07.1;-S 18 5 07.1
33.	SE.ZB4BA2	2	Schneider Electric	black flush pushbutton head Ø22 spring return unmarked	black flush pushbutton head Ø22 spring return unmarked	-S 171 11;-S 176 11
34.	SE.ZB4BZ102	2	Schneider Electric	single contact block with body/fixing collar 1NC screw clamp termil	single contact block with body/fixing collar 1NC screw clamp termil	-S 171 11;-S 176 11
35.	SOC.47506015	5	Socomec	TORES LOCATION SENSOR DELTA IP-15 (15mm)	Maximal diameter of cable: 15mm	-TC 162 05;-TC 169 05;-TC 174 05;-TC 179 05;-TC 18 4 05
36.	SOC.47290590	5	Socomec	ISOM T-15	Connection adaptor ISOM T-15 to ISOM Digiware F-60 modules	-TC 162 05;-TC 169 05;-TC 174 05;-TC 179 05;-TC 18 4 05

Sorting number	Part number	Quantity	Manufacturer	Device	Device description	Device designation
37.	PXC.3044131	3	Phoenix Contact	UT 6 - Feed-through terminal block	Feed-through terminal block nom. voltage: 1000 V nominal current: 41 A number of connections: 2 connection method: Screw connection Rated cross section: 6 mm2 cross section: 0.2 mm2 - 10 mm2 mounting type: NS 35/7,5, NS 35/15 color: gray	-X 162 05
38.	PXC.3209510	227	Phoenix Contact	PT 2,5 - Feed-through terminal block	Feed-through terminal block, nom. voltage: 800 V, nominal current: 24 A, number of connections: 2, number of positions: 1, connection method: Push-in connection, Rated cross section: 2.5 mm2, cross section: 0.14 mm2 - 4 mm2, mounting type: NS 35/7,5, NS 35/15, color: gray	-X 163 09;-X 165 06;-X 169 05;-X 170 09;-X 172 06;-X 174 05;-X 175 09;-X 177 06;-X 179 05;-X 180 09;-X 182 06;-X 184 05;-X 185 09;-X 187 06;-XB 189 03;-XS 201 03;-XS 205 02

1	2	3	4	5	6	7	8	9	10	11	12	13	14	15	16	17	18

Cable name: **4LKD003AR/ 4FDR009MO-B-01**

Cable type: **U1000R2V** | No. of conn., diameter, length: **4G2.5 mm² /**

Remark:

Function text	Page / Column	FROM	Terminal	Conductor	TO	Terminal	Page / Column	Function text
	=4LKD001AR+4LKD003AR/184.5	=4LKD001AR+4LKD003AR-X 184 05	1:A	**BN**	=4 FDR 009 MO+4 FDR 009 MO-M	U1	=4LKD001AR+4LKD003AR/184.5	
[4 FDR 009 MO] CLOSED CHAIN CONVEYOR FOR ASH DISPATCH	=4LKD001AR+4LKD003AR/184.5	=4LKD001AR+4LKD003AR-X 184 05	2:A	**BK**	=4 FDR 009 MO+4 FDR 009 MO-M	V1	=4LKD001AR+4LKD003AR/184.5	
=	=4LKD001AR+4LKD003AR/184.5	=4LKD001AR+4LKD003AR-X 184 05	3:A	**GY**	=4 FDR 009 MO+4 FDR 009 MO-M	W1	=4LKD001AR+4LKD003AR/184.5	
	=4LKD001AR+4LKD003AR/184.7	=4LKD001AR+4LKD003AR-PE		**GNYE**	=4 FDR 009 MO+4 FDR 009 MO-M	PE	=4LKD001AR+4LKD003AR/184.5	

Cable name: **4LKD003AR/ 4FDR009MO-C-01**

Cable type: **U1000R2V** | No. of conn., diameter, length: **5G1.5 mm² /**

Remark:

Function text	Page / Column	FROM	Terminal	Conductor	TO	Terminal	Page / Column	Function text
FORWARD	=4LKD001AR+4LKD003AR/185.9	=4LKD001AR+4LKD003AR-X 185 09	1:A	**BN**	=4 FDR 009 MO+4 FDR 009 MO-X1	3	=4LKD001AR+4LKD003AR/185.9	FORWARD
	=4LKD001AR+4LKD003AR/185.9			**BK**	=4LKD001AR+4LKD003AR-X 185 09	4:A	=4LKD001AR+4LKD003AR/185.10	=
BACKWARD	=4LKD001AR+4LKD003AR/185.15	=4LKD001AR+4LKD003AR-X 185 09	7:A	**GY**	=4 FDR 009 MO+4 FDR 009 MO-X1	10	=4LKD001AR+4LKD003AR/185.15	BACKWARD
FORWARD	=4LKD001AR+4LKD003AR/185.9	=4LKD001AR+4LKD003AR-X 185 09	2:A	**BU**	=4 FDR 009 MO+4 FDR 009 MO-X1	8	=4LKD001AR+4LKD003AR/185.9	FORWARD
	=4LKD001AR+4LKD003AR/205.3	=4LKD001AR+4LKD003AR-PE		**GNYE**	=4 FDR 009 MO+4 FDR 009 MO-PE		=4LKD001AR+4LKD003AR/205.2	

Cable name: **4LKD003AR/ 4FDR009MO-C-02**

Cable type: **U1000R2V** | No. of conn., diameter, length: **12G1.5 mm² /**

Remark:

Function text	Page / Column	FROM	Terminal	Conductor	TO	Terminal	Page / Column	Function text
READY	=4LKD001AR+4LKD003AR/187.11	=4LKD001AR+4LKD003AR-X 187 06	3:A	**1**	=4 FDR 009 MO+4 FDR 009 MO-X1	5	=4LKD001AR+4LKD003AR/187.11	READY
=	=4LKD001AR+4LKD003AR/187.11	=4LKD001AR+4LKD003AR-X 187 06	8:A	**2**	=4 FDR 009 MO+4 FDR 009 MO-X1	6	=4LKD001AR+4LKD003AR/187.11	=
	=4LKD001AR+4LKD003AR/188.4	=4LKD001AR+4LKD003AR-X 187 06	4:B	**3**	=4 FDR 009 MO+4 FDR 009 MO-X1	11:A	=4LKD001AR+4LKD003AR/188.4	
CLOSED CHAIN CONVEYOR FOR ASH DISPATCH - "0" PULSE	=4LKD001AR+4LKD003AR/188.6	=4LKD001AR+4LKD003AR-X 187 06	14:B	**4**	=4 FDR 009 MO+4 FDR 009 MO-X1	12:A	=4LKD001AR+4LKD003AR/188.6	CLOSED CHAIN CONVEYOR FOR ASH DISPATCH - "0" PULSE
=	=4LKD001AR+4LKD003AR/188.8	=4LKD001AR+4LKD003AR-X 187 06	5:B	**5**	=4 FDR 009 MO+4 FDR 009 MO-X1	13:A	=4LKD001AR+4LKD003AR/188.8	=
CLOSED CHAIN CONVEYOR FOR ASH DISPATCH - BLOCKAGE DETECTION	=4LKD001AR+4LKD003AR/188.9	=4LKD001AR+4LKD003AR-X 187 06	15:B	**6**	=4 FDR 009 MO+4 FDR 009 MO-X1	14:A	=4LKD001AR+4LKD003AR/188.9	CLOSED CHAIN CONVEYOR FOR ASH DISPATCH - BLOCKAGE DETECTION
	=4LKD001AR+4LKD003AR/205.4	=4LKD001AR+4LKD003AR-XS 205 02	21:A	**7**	=4 FDR 009 MO+4 FDR 009 MO-X1	?:A	=4LKD001AR+4LKD003AR/205.4	
	=4LKD001AR+4LKD003AR/205.5	=4LKD001AR+4LKD003AR-XS 205 02	22:A	**8**	=4 FDR 009 MO+4 FDR 009 MO-X1	?:A	=4LKD001AR+4LKD003AR/205.5	
	=4LKD001AR+4LKD003AR/205.6	=4LKD001AR+4LKD003AR-XS 205 02	23:A	**9**	=4 FDR 009 MO+4 FDR 009 MO-X1	?:A	=4LKD001AR+4LKD003AR/205.6	
	=4LKD001AR+4LKD003AR/205.7	=4LKD001AR+4LKD003AR-XS 205 02	24:A	**10**	=4 FDR 009 MO+4 FDR 009 MO-X1	?:A	=4LKD001AR+4LKD003AR/205.7	
	=4LKD001AR+4LKD003AR/205.8	=4LKD001AR+4LKD003AR-XS 205 02	25:A	**11**	=4 FDR 009 MO+4 FDR 009 MO-X1	?:A	=4LKD001AR+4LKD003AR/205.8	
	=4LKD001AR+4LKD003AR/205.9	=4LKD001AR+4LKD003AR-PE		**GNYE**	=4 FDR 009 MO+4 FDR 009 MO-PE		=4LKD001AR+4LKD003AR/205.8	

1	2	3	4	5	6	7	8	9	10	11	12	13	14	15	16	17	18

Cable name: **4LKD003AR/ 4FES008MO-B-01**

Cable type: **U1000R2V** | No. of conn., diameter, length: **4G2.5 mm² /**

Remark:

Function text	Page / Column	FROM	Terminal	Conductor	TO	Terminal	Page / Column	Function text
	=4LKD001AR+4LKD003AR/162.5	=4LKD001AR+4LKD003AR-X 162 05	1:A	**BN**	=4 FES 008 MO+4 FES 008 MO-M61	U1	=4LKD001AR+4LKD003AR/162.5	
[4 FES 008 MO] BELT CONVEYOR FOR BOTTOM ASH	=4LKD001AR+4LKD003AR/162.5	=4LKD001AR+4LKD003AR-X 162 05	2:A	**BK**	=4 FES 008 MO+4 FES 008 MO-M61	V1	=4LKD001AR+4LKD003AR/162.5	
=	=4LKD001AR+4LKD003AR/162.5	=4LKD001AR+4LKD003AR-X 162 05	3:A	**GY**	=4 FES 008 MO+4 FES 008 MO-M61	W1	=4LKD001AR+4LKD003AR/162.5	
	=4LKD001AR+4LKD003AR/162.7	=4LKD001AR+4LKD003AR-PE		**GNYE**	=4 FES 008 MO+4 FES 008 MO-M61	PE	=4LKD001AR+4LKD003AR/162.5	

Cable name: **4LKD003AR/ 4FES008MO-C-01**

Cable type: **U1000R2V** | No. of conn., diameter, length: **5G1.5 mm² /**

Remark:

Function text	Page / Column	FROM	Terminal	Conductor	TO	Terminal	Page / Column	Function text
FORWARD	=4LKD001AR+4LKD003AR/163.9	=4LKD001AR+4LKD003AR-X 163 09	1:A	**BN**	=4 FES 008 MO+4 FES 008 MO-X1	3	=4LKD001AR+4LKD003AR/163.9	FORWARD
=	=4LKD001AR+4LKD003AR/163.9			**BK**	=4LKD001AR+4LKD003AR-X 163 09	4:A	=4LKD001AR+4LKD003AR/163.10	=
=	=4LKD001AR+4LKD003AR/163.9	=4LKD001AR+4LKD003AR-X 163 09	2:A	**GY**	=4 FES 008 MO+4 FES 008 MO-X1	8	=4LKD001AR+4LKD003AR/163.9	=
BACKWARD	=4LKD001AR+4LKD003AR/163.15	=4LKD001AR+4LKD003AR-X 163 09	7:A	**BU**	=4 FES 008 MO+4 FES 008 MO-X1	10	=4LKD001AR+4LKD003AR/163.15	BACKWARD
	=4LKD001AR+4LKD003AR/205.3	=4LKD001AR+4LKD003AR-PE		**GNYE**	=4 FES 008 MO+4 FES 008 MO-PE		=4LKD001AR+4LKD003AR/205.2	

Cable name: **4LKD003AR/ 4FES008MO-C-02**

Cable type: **U1000R2V** | No. of conn., diameter, length: **27G1.5 mm² /**

Remark:

Function text	Page / Column	FROM	Terminal	Conductor	TO	Terminal	Page / Column	Function text
READY	=4LKD001AR+4LKD003AR/165.11	=4LKD001AR+4LKD003AR-X 165 06	3:A	**1**	=4 FES 008 MO+4 FES 008 MO-X1	5:A	=4LKD001AR+4LKD003AR/165.11	READY
=	=4LKD001AR+4LKD003AR/165.11	=4LKD001AR+4LKD003AR-X 165 06	15:A	**2**	=4 FES 008 MO+4 FES 008 MO-X1	6:A	=4LKD001AR+4LKD003AR/165.11	=
	=4LKD001AR+4LKD003AR/166.4	=4LKD001AR+4LKD003AR-X 165 06	4:B	**3**	=4 FES 008 MO+4 FES 008 MO-X1	17	=4LKD001AR+4LKD003AR/166.4	
BELT CONVEYOR FOR BOTTOM ASH - BELT MISALIGNMENT 1	=4LKD001AR+4LKD003AR/166.6	=4LKD001AR+4LKD003AR-X 165 06	21:B	**4**	=4 FES 008 MO+4 FES 008 MO-X1	18	=4LKD001AR+4LKD003AR/166.6	BELT CONVEYOR FOR BOTTOM ASH - BELT MISALIGNMENT 1
=	=4LKD001AR+4LKD003AR/166.8	=4LKD001AR+4LKD003AR-X 165 06	5:B	**5**	=4 FES 008 MO+4 FES 008 MO-X1	19	=4LKD001AR+4LKD003AR/166.8	=
BELT CONVEYOR FOR BOTTOM ASH - BELT MISALIGNMENT 2	=4LKD001AR+4LKD003AR/166.9	=4LKD001AR+4LKD003AR-X 165 06	22:B	**6**	=4 FES 008 MO+4 FES 008 MO-X1	20	=4LKD001AR+4LKD003AR/166.9	BELT CONVEYOR FOR BOTTOM ASH - BELT MISALIGNMENT 2
=	=4LKD001AR+4LKD003AR/166.11	=4LKD001AR+4LKD003AR-X 165 06	6:B	**7**	=4 FES 008 MO+4 FES 008 MO-X1	21	=4LKD001AR+4LKD003AR/166.11	=
BELT CONVEYOR FOR BOTTOM ASH - BELT MISALIGNMENT 3	=4LKD001AR+4LKD003AR/166.12	=4LKD001AR+4LKD003AR-X 165 06	23:B	**8**	=4 FES 008 MO+4 FES 008 MO-X1	22	=4LKD001AR+4LKD003AR/166.12	BELT CONVEYOR FOR BOTTOM ASH - BELT MISALIGNMENT 3
=	=4LKD001AR+4LKD003AR/166.14	=4LKD001AR+4LKD003AR-X 165 06	7:B	**9**	=4 FES 008 MO+4 FES 008 MO-X1	23	=4LKD001AR+4LKD003AR/166.14	=
BELT CONVEYOR FOR BOTTOM ASH - BELT MISALIGNMENT 4	=4LKD001AR+4LKD003AR/166.15	=4LKD001AR+4LKD003AR-X 165 06	24:B	**10**	=4 FES 008 MO+4 FES 008 MO-X1	24	=4LKD001AR+4LKD003AR/166.15	BELT CONVEYOR FOR BOTTOM ASH - BELT MISALIGNMENT 4
	=4LKD001AR+4LKD003AR/167.4	=4LKD001AR+4LKD003AR-X 165 06	8:B	**11**	=4 FES 008 MO+4 FES 008 MO-X1	25	=4LKD001AR+4LKD003AR/167.4	
	=4LKD001AR+4LKD003AR/167.6	=4LKD001AR+4LKD003AR-X 165 06	25:B	**12**	=4 FES 008 MO+4 FES 008 MO-X1	26	=4LKD001AR+4LKD003AR/167.6	
BELT CONVEYOR FOR BOTTOM ASH - EMERGENCY STOP 1	=4LKD001AR+4LKD003AR/167.8	=4LKD001AR+4LKD003AR-X 165 06	9:B	**13**	=4 FES 008 MO+4 FES 008 MO-X1	27	=4LKD001AR+4LKD003AR/167.8	BELT CONVEYOR FOR BOTTOM ASH - EMERGENCY STOP 1
=	=4LKD001AR+4LKD003AR/167.9	=4LKD001AR+4LKD003AR-X 165 06	26:B	**14**	=4 FES 008 MO+4 FES 008 MO-X1	28	=4LKD001AR+4LKD003AR/167.9	=
=	=4LKD001AR+4LKD003AR/167.11	=4LKD001AR+4LKD003AR-X 165 06	10:B	**15**	=4 FES 008 MO+4 FES 008 MO-X1	29	=4LKD001AR+4LKD003AR/167.11	=
=	=4LKD001AR+4LKD003AR/167.12	=4LKD001AR+4LKD003AR-X 165 06	27:B	**16**	=4 FES 008 MO+4 FES 008 MO-X1	30	=4LKD001AR+4LKD003AR/167.12	=
BELT CONVEYOR FOR BOTTOM ASH - EMERGENCY STOP 2	=4LKD001AR+4LKD003AR/167.14	=4LKD001AR+4LKD003AR-X 165 06	11:B	**17**	=4 FES 008 MO+4 FES 008 MO-X1	31	=4LKD001AR+4LKD003AR/167.14	BELT CONVEYOR FOR BOTTOM ASH - EMERGENCY STOP 2
=	=4LKD001AR+4LKD003AR/167.15	=4LKD001AR+4LKD003AR-X 165 06	28:B	**18**	=4 FES 008 MO+4 FES 008 MO-X1	32	=4LKD001AR+4LKD003AR/167.15	=
	=4LKD001AR+4LKD003AR/168.4	=4LKD001AR+4LKD003AR-X 165 06	12:B	**19**	=4 FES 008 MO+4 FES 008 MO-X1	15	=4LKD001AR+4LKD003AR/168.4	
BELT CONVEYOR FOR BOTTOM ASH - "0" PULSE	=4LKD001AR+4LKD003AR/168.6	=4LKD001AR+4LKD003AR-X 165 06	29:B	**20**	=4 FES 008 MO+4 FES 008 MO-X1	16	=4LKD001AR+4LKD003AR/168.6	BELT CONVEYOR FOR BOTTOM ASH - "0" PULSE

1	2	3	4	5	6	7	8	9	10	11	12	13	14	15	16	17	18

Cable name: **4LKD003AR/ 4FES008MO-C-02**

Cable type: **U1000R2V** No. of conn., diameter, length: **27G1.5 mm² /**

Remark:

Function text	Page / Column	FROM	Terminal	Conductor	TO	Terminal	Page / Column	Function text
	=4LKD001AR+4LKD003AR/205.4	=4LKD001AR+4LKD003AR-XS 205 02	15:A	**21**	=4 FES 008 MO+4 FES 008 MO-X1	?:A	=4LKD001AR+4LKD003AR/205.4	
	=4LKD001AR+4LKD003AR/205.5	=4LKD001AR+4LKD003AR-XS 205 02	16:A	**22**	=4 FES 008 MO+4 FES 008 MO-X1	?:A	=4LKD001AR+4LKD003AR/205.5	
	=4LKD001AR+4LKD003AR/205.6	=4LKD001AR+4LKD003AR-XS 205 02	17:A	**23**	=4 FES 008 MO+4 FES 008 MO-X1	?:A	=4LKD001AR+4LKD003AR/205.6	
	=4LKD001AR+4LKD003AR/205.7	=4LKD001AR+4LKD003AR-XS 205 02	18:A	**24**	=4 FES 008 MO+4 FES 008 MO-X1	?:A	=4LKD001AR+4LKD003AR/205.7	
	=4LKD001AR+4LKD003AR/205.8	=4LKD001AR+4LKD003AR-XS 205 02	19:A	**25**	=4 FES 008 MO+4 FES 008 MO-X1	?:A	=4LKD001AR+4LKD003AR/205.8	
	=4LKD001AR+4LKD003AR/205.8	=4LKD001AR+4LKD003AR-XS 205 02	20:A	**26**	=4 FES 008 MO+4 FES 008 MO-X1	?:A	=4LKD001AR+4LKD003AR/205.8	
	=4LKD001AR+4LKD003AR/205.10	=4LKD001AR+4LKD003AR-PE		**GNYE**	=4 FES 008 MO+4 FES 008 MO-PE		=4LKD001AR+4LKD003AR/205.9	

Cable name: **4LKD003AR/ 4FES037BW-C-01**

Cable type: **U1000R2V** No. of conn., diameter, length: **5G1.5 mm² /**

Remark:

Function text	Page / Column	FROM	Terminal	Conductor	TO	Terminal	Page / Column	Function text
FORWARD	=4LKD001AR+4LKD003AR/170.9	=4LKD001AR+4LKD003AR-X 170 09	1:A	**BN**	=4 FES 038 MO+4 FES 037 BW-X1	3	=4LKD001AR+4LKD003AR/170.9	FORWARD
=	=4LKD001AR+4LKD003AR/170.9			**BK**	=4LKD001AR+4LKD003AR-X 170 09	4:A	=4LKD001AR+4LKD003AR/170.10	=
=	=4LKD001AR+4LKD003AR/170.9	=4LKD001AR+4LKD003AR-X 170 09	2:A	**GY**	=4 FES 038 MO+4 FES 037 BW-X1	8	=4LKD001AR+4LKD003AR/170.9	=
BACKWARD	=4LKD001AR+4LKD003AR/170.15	=4LKD001AR+4LKD003AR-X 170 09	7:A	**BU**	=4 FES 038 MO+4 FES 037 BW-X1	10	=4LKD001AR+4LKD003AR/170.15	BACKWARD
	=4LKD001AR+4LKD003AR/205.11	=4LKD001AR+4LKD003AR-PE		**GNYE**	=4 FES 038 MO+4 FES 038 MO-PE		=4LKD001AR+4LKD003AR/205.10	

Cable name: **4LKD003AR/ 4FES037BW-C-02**

Cable type: **U1000R2V** No. of conn., diameter, length: **7G1.5 mm² /**

Remark:

Function text	Page / Column	FROM	Terminal	Conductor	TO	Terminal	Page / Column	Function text
READY	=4LKD001AR+4LKD003AR/172.13	=4LKD001AR+4LKD003AR-X 172 06	3:A	**1**	=4 FES 038 MO+4 FES 037 BW-X1	5	=4LKD001AR+4LKD003AR/172.13	READY
=	=4LKD001AR+4LKD003AR/172.13	=4LKD001AR+4LKD003AR-X 172 06	9:A	**2**	=4 FES 038 MO+4 FES 037 BW-X1	6	=4LKD001AR+4LKD003AR/172.13	=
	=4LKD001AR+4LKD003AR/173.4	=4LKD001AR+4LKD003AR-X 172 06	4:B	**3**	=4 FES 038 MO+4 FES 038 MO-X1	11:A	=4LKD001AR+4LKD003AR/173.4	
ASH CRUSHER BELOW ECO - "0" PULSE	=4LKD001AR+4LKD003AR/173.6	=4LKD001AR+4LKD003AR-X 172 06	11:B	**4**	=4 FES 038 MO+4 FES 038 MO-X1	12:A	=4LKD001AR+4LKD003AR/173.6	ASH CRUSHER BELOW ECO - "0" PULSE
	=4LKD001AR+4LKD003AR/205.12	=4LKD001AR+4LKD003AR-XS 205 02	13:A	**5**	=4 FES 038 MO+4 FES 038 MO-X1	?:A	=4LKD001AR+4LKD003AR/205.12	
	=4LKD001AR+4LKD003AR/205.13	=4LKD001AR+4LKD003AR-XS 205 02	14:A	**6**	=4 FES 038 MO+4 FES 038 MO-X1	?:A	=4LKD001AR+4LKD003AR/205.13	
	=4LKD001AR+4LKD003AR/205.14	=4LKD001AR+4LKD003AR-PE		**GNYE**	=4 FES 038 MO+4 FES 038 MO-PE		=4LKD001AR+4LKD003AR/205.14	

Cable name: **4LKD003AR/ 4FES038MO-B-01**

Cable type: **U1000R2V** No. of conn., diameter, length: **4G2.5 mm² /**

Remark:

Function text	Page / Column	FROM	Terminal	Conductor	TO	Terminal	Page / Column	Function text
	=4LKD001AR+4LKD003AR/169.5	=4LKD001AR+4LKD003AR-X 169 05	1:A	**BN**	=4 FES 038 MO+4 FES 038 MO-M21	U1	=4LKD001AR+4LKD003AR/169.5	
[4 FES 038 MO] ASH CRUSHER BELOW ECO	=4LKD001AR+4LKD003AR/169.5	=4LKD001AR+4LKD003AR-X 169 05	2:A	**BK**	=4 FES 038 MO+4 FES 038 MO-M21	V1	=4LKD001AR+4LKD003AR/169.5	
=	=4LKD001AR+4LKD003AR/169.5	=4LKD001AR+4LKD003AR-X 169 05	3:A	**GY**	=4 FES 038 MO+4 FES 038 MO-M21	W1	=4LKD001AR+4LKD003AR/169.5	
	=4LKD001AR+4LKD003AR/169.7	=4LKD001AR+4LKD003AR-PE		**GNYE**	=4 FES 038 MO+4 FES 038 MO-M21	PE	=4LKD001AR+4LKD003AR/169.5	

1	2	3	4	5	6	7	8	9	10	11	12	13	14	15	16	17	18

Cable name: **4LKD003AR/ 4FES039BW-C-01**

Cable type: **U1000R2V** | No. of conn., diameter, length: **5G1.5 mm² /**

Remark:

Function text	Page / Column	FROM	Terminal	Conductor	TO	Terminal	Page / Column	Function text
FORWARD	=4LKD001AR+4LKD003AR/175.9	=4LKD001AR+4LKD003AR-X 175 09	1:A	**BN**	=4 FES 040 MO+4 FES 039 BW-X1	3	=4LKD001AR+4LKD003AR/175.9	FORWARD
=	=4LKD001AR+4LKD003AR/175.9			**BK**	=4LKD001AR+4LKD003AR-X 175 09	4:A	=4LKD001AR+4LKD003AR/175.10	=
=	=4LKD001AR+4LKD003AR/175.9	=4LKD001AR+4LKD003AR-X 175 09	2:A	**GY**	=4 FES 040 MO+4 FES 039 BW-X1	8	=4LKD001AR+4LKD003AR/175.9	=
BACKWARD	=4LKD001AR+4LKD003AR/175.15	=4LKD001AR+4LKD003AR-X 175 09	7:A	**BU**	=4 FES 040 MO+4 FES 039 BW-X1	10	=4LKD001AR+4LKD003AR/175.15	BACKWARD
	=4LKD001AR+4LKD003AR/206.3	=4LKD001AR+4LKD003AR-PE		**GNYE**	=4 FES 040 MO+4 FES 040 MO-PE		=4LKD001AR+4LKD003AR/206.2	

Cable name: **4LKD003AR/ 4FES039BW-C-02**

Cable type: **U1000R2V** | No. of conn., diameter, length: **7G1.5 mm² /**

Remark:

Function text	Page / Column	FROM	Terminal	Conductor	TO	Terminal	Page / Column	Function text
READY	=4LKD001AR+4LKD003AR/177.13	=4LKD001AR+4LKD003AR-X 177 06	3:A	**1**	=4 FES 040 MO+4 FES 039 BW-X1	5:A	=4LKD001AR+4LKD003AR/177.13	READY
=	=4LKD001AR+4LKD003AR/177.13	=4LKD001AR+4LKD003AR-X 177 06	9:A	**2**	=4 FES 040 MO+4 FES 039 BW-X1	6:A	=4LKD001AR+4LKD003AR/177.13	=
	=4LKD001AR+4LKD003AR/178.4	=4LKD001AR+4LKD003AR-X 177 06	4:B	**3**	=4 FES 040 MO+4 FES 039 BW-X1	11	=4LKD001AR+4LKD003AR/178.4	
ASH CRUSHER BELOW SH 3 - "0" PULSE	=4LKD001AR+4LKD003AR/178.6	=4LKD001AR+4LKD003AR-X 177 06	11:B	**4**	=4 FES 040 MO+4 FES 039 BW-X1	12	=4LKD001AR+4LKD003AR/178.6	ASH CRUSHER BELOW SH 3 - "0" PULSE
	=4LKD001AR+4LKD003AR/206.4	=4LKD001AR+4LKD003AR-XS 205 02	26:A	**5**	=4 FES 040 MO+4 FES 040 MO-X1	?:A	=4LKD001AR+4LKD003AR/206.4	
	=4LKD001AR+4LKD003AR/206.5	=4LKD001AR+4LKD003AR-XS 205 02	27:A	**6**	=4 FES 040 MO+4 FES 040 MO-X1	?:A	=4LKD001AR+4LKD003AR/206.5	
	=4LKD001AR+4LKD003AR/206.6	=4LKD001AR+4LKD003AR-PE		**GNYE**	=4 FES 040 MO+4 FES 040 MO-PE		=4LKD001AR+4LKD003AR/206.6	

Cable name: **4LKD003AR/ 4FES040MO-B-01**

Cable type: **U1000R2V** | No. of conn., diameter, length: **4G2.5 mm² /**

Remark:

Function text	Page / Column	FROM	Terminal	Conductor	TO	Terminal	Page / Column	Function text
	=4LKD001AR+4LKD003AR/174.5	=4LKD001AR+4LKD003AR-X 174 05	1:A	**BN**	=4 FES 040 MO+4 FES 040 MO-M22	U1	=4LKD001AR+4LKD003AR/174.5	
[4 FES 040 MO] ASH CRUSHER BELOW SH 3	=4LKD001AR+4LKD003AR/174.5	=4LKD001AR+4LKD003AR-X 174 05	2:A	**BK**	=4 FES 040 MO+4 FES 040 MO-M22	V1	=4LKD001AR+4LKD003AR/174.5	
=	=4LKD001AR+4LKD003AR/174.5	=4LKD001AR+4LKD003AR-X 174 05	3:A	**GY**	=4 FES 040 MO+4 FES 040 MO-M22	W1	=4LKD001AR+4LKD003AR/174.5	
	=4LKD001AR+4LKD003AR/174.7	=4LKD001AR+4LKD003AR-PE		**GNYE**	=4 FES 040 MO+4 FES 040 MO-M22	PE	=4LKD001AR+4LKD003AR/174.5	

Cable name: **4LKD003AR/ 4FES049TD-C-01**

Cable type: **U1000R2V** | No. of conn., diameter, length: **5G1.5 mm² /**

Remark:

Function text	Page / Column	FROM	Terminal	Conductor	TO	Terminal	Page / Column	Function text
FORWARD	=4LKD001AR+4LKD003AR/180.9	=4LKD001AR+4LKD003AR-X 180 09	1:A	**BN**	=4 FES 050 MO+4 FES 049 TD-X1	3	=4LKD001AR+4LKD003AR/180.9	FORWARD
	=4LKD001AR+4LKD003AR/180.9			**BK**	=4LKD001AR+4LKD003AR-X 180 09	4:A	=4LKD001AR+4LKD003AR/180.10	=
FORWARD	=4LKD001AR+4LKD003AR/180.9	=4LKD001AR+4LKD003AR-X 180 09	2:A	**GY**	=4 FES 050 MO+4 FES 049 TD-X1	8	=4LKD001AR+4LKD003AR/180.9	=
BACKWARD	=4LKD001AR+4LKD003AR/180.15	=4LKD001AR+4LKD003AR-X 180 09	7:A	**BU**	=4 FES 050 MO+4 FES 049 TD-X1	10	=4LKD001AR+4LKD003AR/180.15	BACKWARD
	=4LKD001AR+4LKD003AR/206.3	=4LKD001AR+4LKD003AR-PE		**GNYE**	=4 FES 050 MO+4 FES 050 MO-PE		=4LKD001AR+4LKD003AR/206.2	

1	2	3	4	5	6	7	8	9	10	11	12	13	14	15	16	17	18

Cable name: **4LKD003AR/ 4FES049TD-C-02**

Cable type: **U1000R2V** | No. of conn., diameter, length: **12G1.5 mm² /**

Remark:

Function text	Page / Column	FROM	Terminal	Conductor	TO	Terminal	Page / Column	Function text
READY	=4LKD001AR+4LKD003AR/182.11	=4LKD001AR+4LKD003AR-X 182 06	3:A	**1**	=4 FES 050 MO+4 FES 049 TD-X1	5:A	=4LKD001AR+4LKD003AR/182.11	READY
=	=4LKD001AR+4LKD003AR/182.11	=4LKD001AR+4LKD003AR-X 182 06	8:A	**2**	=4 FES 050 MO+4 FES 049 TD-X1	6:A	=4LKD001AR+4LKD003AR/182.11	=
	=4LKD001AR+4LKD003AR/183.4	=4LKD001AR+4LKD003AR-X 182 06	4:B	**3**	=4 FES 050 MO+4 FES 049 TD-X1	11:A	=4LKD001AR+4LKD003AR/183.4	
CHAIN CONVEYOR UNDER ECO - "0" PULSE	=4LKD001AR+4LKD003AR/183.6	=4LKD001AR+4LKD003AR-X 182 06	14:B	**4**	=4 FES 050 MO+4 FES 049 TD-X1	12:A	=4LKD001AR+4LKD003AR/183.6	CHAIN CONVEYOR UNDER ECO - "0" PULSE
=	=4LKD001AR+4LKD003AR/183.8	=4LKD001AR+4LKD003AR-X 182 06	5:B	**5**	=4 FES 050 MO+4 FES 049 TD-X1	13:A	=4LKD001AR+4LKD003AR/183.8	=
CHAIN CONVEYOR UNDER ECO - BLOCKAGE DETECTION	=4LKD001AR+4LKD003AR/183.9	=4LKD001AR+4LKD003AR-X 182 06	15:B	**6**	=4 FES 050 MO+4 FES 049 TD-X1	14:A	=4LKD001AR+4LKD003AR/183.9	CHAIN CONVEYOR UNDER ECO - BLOCKAGE DETECTION
	=4LKD001AR+4LKD003AR/206.4	=4LKD001AR+4LKD003AR-XS 205 02	28:A	**7**	=4 FES 050 MO+4 FES 050 MO-X1	?:A	=4LKD001AR+4LKD003AR/206.4	
	=4LKD001AR+4LKD003AR/206.5	=4LKD001AR+4LKD003AR-XS 205 02	29:A	**8**	=4 FES 050 MO+4 FES 050 MO-X1	?:A	=4LKD001AR+4LKD003AR/206.5	
	=4LKD001AR+4LKD003AR/206.6	=4LKD001AR+4LKD003AR-XS 205 02	30:A	**9**	=4 FES 050 MO+4 FES 050 MO-X1	?:A	=4LKD001AR+4LKD003AR/206.6	
	=4LKD001AR+4LKD003AR/206.7	=4LKD001AR+4LKD003AR-XS 205 02	31:A	**10**	=4 FES 050 MO+4 FES 050 MO-X1	?:A	=4LKD001AR+4LKD003AR/206.7	
	=4LKD001AR+4LKD003AR/206.8	=4LKD001AR+4LKD003AR-XS 205 02	32:A	**11**	=4 FES 050 MO+4 FES 050 MO-X1	?:A	=4LKD001AR+4LKD003AR/206.8	
	=4LKD001AR+4LKD003AR/206.9	=4LKD001AR+4LKD003AR-PE		**GNYE**	=4 FES 050 MO+4 FES 050 MO-PE		=4LKD001AR+4LKD003AR/206.8	

Cable name: **4LKD003AR/ 4FES050MO-B-01**

Cable type: **U1000R2V** | No. of conn., diameter, length: **4G2.5 mm² /**

Remark:

Function text	Page / Column	FROM	Terminal	Conductor	TO	Terminal	Page / Column	Function text
	=4LKD001AR+4LKD003AR/179.5	=4LKD001AR+4LKD003AR-X 179 05	1:A	**BN**	=4 FES 050 MO+4 FES 050 MO-M23	U1	=4LKD001AR+4LKD003AR/179.5	
[4 FES 050 MO] CHAIN CONVEYOR UNDER ECO	=4LKD001AR+4LKD003AR/179.5	=4LKD001AR+4LKD003AR-X 179 05	2:A	**BK**	=4 FES 050 MO+4 FES 050 MO-M23	V1	=4LKD001AR+4LKD003AR/179.5	
=	=4LKD001AR+4LKD003AR/179.5	=4LKD001AR+4LKD003AR-X 179 05	3:A	**GY**	=4 FES 050 MO+4 FES 050 MO-M23	W1	=4LKD001AR+4LKD003AR/179.5	
	=4LKD001AR+4LKD003AR/179.7	=4LKD001AR+4LKD003AR-PE		**GNYE**	=4 FES 050 MO+4 FES 050 MO-M23	PE	=4LKD001AR+4LKD003AR/179.5	

Terminal diagram

Strip

=4LKD001AR+4LKD003AR-X 162 05

A SIDE								B SIDE
Placement	Target designation	Cable name and type	Conductor	Jumper		Wiring	Target designation
/162.5	=4 FES 008 MO+4 FES 008 MO-M61:U1	4LKD003AR/ 4FES008MO-B-01 U1000R2V 4G2.5 mm²	BN 2.5 mm²	'	1	BK 2.5 mm²	-KM 162 05:2/T1
/162.5	=4 FES 008 MO+4 FES 008 MO-M61:V1	4LKD003AR/ 4FES008MO-B-01 U1000R2V 4G2.5 mm²	BK 2.5 mm²	'	2	BK 2.5 mm²	-KM 162 05:4/T2
/162.5	=4 FES 008 MO+4 FES 008 MO-M61:W1	4LKD003AR/ 4FES008MO-B-01 U1000R2V 4G2.5 mm²	GY 2.5 mm²	'	3	BK 2.5 mm²	-KM 162 05:6/T3

Terminal diagram

Strip

=4LKD001AR+4LKD003AR-X 163 09

A SIDE							B SIDE
Placement	Target designation	Cable name and type	Conductor	Jumper	Strip	Wiring	Target designation
/163.9	=4 FES 008 MO+4 FES 008 MO-X1:3	4LKD003AR/ 4FES008MO-C-01 U1000R2V 5G1.5 mm²	BN 1.5 mm²		1	WH 1 mm²	-Q 162 05:21
/163.9	=4 FES 008 MO+4 FES 008 MO-X1:8	4LKD003AR/ 4FES008MO-C-01 U1000R2V 5G1.5 mm²	GY 1.5 mm²		2	WH 1 mm²	-K 164 10:11
					3	WH 1 mm²	-KM 162 05:74
/163.9		4LKD003AR/ 4FES008MO-C-01 U1000R2V 5G1.5 mm²	BK 1.5 mm²		4	WH 1 mm²	-KM 162 05:73
					5	WH 1 mm²	-KM 162 07:73
					6	WH 1 mm²	-S 163 07.1:23
/163.15	=4 FES 008 MO+4 FES 008 MO-X1:10	4LKD003AR/ 4FES008MO-C-01 U1000R2V 5G1.5 mm²	BU 1.5 mm²		7	WH 1 mm²	-K 164 10:21
					8		
					9		
					10	WH 1 mm²	-S 163 07.1:43
					11		
					12		

Date:	17.03.2026.	SINTAKSA A Voith Company	Client:	ANDRITZ TEP d.o.o. Ulica 108. brigade ZNG 84, 35000 Slavonski Brod, Croatia	Scope: BOILER/LOW VOLTAGE CABINET BOILER (NORMAL) 3	Project: BRC-4	Unit & Issuer: ATEP0	Number: 1874	Revision: G
Drawn:	Luka Božičević								#Y
Approved:	Grga Kolić		Object:	RDF Albioma Les Bois Rouge Reunion - France	Content: Terminal diagram =4LKD001AR+4LKD003AR-X 163 09	Drawing designation: BRC-4-ATEP0-1874-G			=4LKD001AR
Format:	A3								+4LKD003AR

Sheet: 602
Next: 603

Terminal diagram

Strip

=4LKD001AR+4LKD003AR-X 165 06

A SIDE						B SIDE
Placement	Target designation	Cable name and type	Conductor	Jumper	Wiring	Target designation
				1		
				2	RD 1 mm²	-KM 162 05:83
/165.11	=4 FES 008 MO+4 FES 008 MO-X1:5:A	4LKD003AR/ 4FES008MO-C-02 U1000R2V 27G1.5 mm²	1 1.5 mm²	3		
				4	3 1.5 mm²	=4 FES 008 MO+4 FES 008
				5	5 1.5 mm²	=4 FES 008 MO+4 FES 008
				6	7 1.5 mm²	=4 FES 008 MO+4 FES 008
				7	9 1.5 mm²	=4 FES 008 MO+4 FES 008
				8	11 1.5 mm²	=4 FES 008 MO+4 FES 008
				9	13 1.5 mm²	=4 FES 008 MO+4 FES 008
				10	15 1.5 mm²	=4 FES 008 MO+4 FES 008
				11	17 1.5 mm²	=4 FES 008 MO+4 FES 008
				12	19 1.5 mm²	=4 FES 008 MO+4 FES 008
				13	RD 1 mm²	-KM 162 05:84
				14	RD 1 mm²	-KM 162 07:84
/165.11	=4 FES 008 MO+4 FES 008 MO-X1:6:A	4LKD003AR/ 4FES008MO-C-02 U1000R2V 27G1.5 mm²	2 1.5 mm²	15	RD 1 mm²	-K 164 10:31
				16	RD 1 mm²	-S 163 07.1:54
				17		
				18		
				19		
				20		
				21	4 1.5 mm²	=4 FES 008 MO+4 FES 008
				22	6 1.5 mm²	=4 FES 008 MO+4 FES 008
				23	8 1.5 mm²	=4 FES 008 MO+4 FES 008
				24	10 1.5 mm²	=4 FES 008 MO+4 FES 008
				25	12 1.5 mm²	=4 FES 008 MO+4 FES 008

Date:	17.03.2026.	SINTAKSA A Voith Company	Client:	ANDRITZ TEP d.o.o. Ulica 108. brigade ZNG 84, 35000 Slavonski Brod, Croatia	Scope: BOILER/LOW VOLTAGE CABINET BOILER (NORMAL) 3	Project: BRC-4	Unit & Issuer: ATEP0	Number: 1874	Revision: G
Drawn:	Luka Božičević								#Y
Approved:	Grga Kolić		Object:	RDF Albioma Les Bois Rouge Reunion - France	Content: Terminal diagram =4LKD001AR+4LKD003AR-X 165 06	Drawing designation: BRC-4-ATEP0-1874-G		=4LKD001AR	Sheet: 603
Format:	A3							+4LKD003AR	Next: 604

Terminal diagram

Strip

=4LKD001AR+4LKD003AR-X 165 06

A SIDE						B SIDE
Placement	Target designation	Cable name and type	Conductor	Jumper	Wiring	Target designation
				' 26	14 1.5 mm²	=4 FES 008 MO+4 FES 008
				' 27	16 1.5 mm²	=4 FES 008 MO+4 FES 008
				' 28	18 1.5 mm²	=4 FES 008 MO+4 FES 008
				' 29	20 1.5 mm²	=4 FES 008 MO+4 FES 008
				' 30		
				' 31		
				' 32		

Date:	17.03.2026.	SINTAKSA A Voith Company	Client:	ANDRITZ TEP d.o.o. Ulica 108. brigade ZNG 84, 35000 Slavonski Brod, Croatia	Scope: BOILER/LOW VOLTAGE CABINET BOILER (NORMAL) 3	Project: BRC-4	Unit & Issuer: ATEP0	Number: 1874	Revision: G
Drawn:	Luka Božičević								#Y
Approved:	Grga Kolić		Object:	RDF Albioma Les Bois Rouge Reunion - France	Content: Terminal diagram =4LKD001AR+4LKD003AR-X 165 06	Drawing designation: BRC-4-ATEP0-1874-G			=4LKD001AR
Format:	A3								+4LKD003AR

Sheet: 604

Next: 605

Terminal diagram

Strip

=4LKD001AR+4LKD003AR-X 169 05

A SIDE								B SIDE
Placement	Target designation	Cable name and type	Conductor	Jumper		Wiring	Target designation
/169.5	=4 FES 038 MO+4 FES 038 MO-M21:U1	4LKD003AR/ 4FES038MO-B-01 U1000R2V 4G2.5 mm²	BN 2.5 mm²	'	1	BK 2.5 mm²	-QA 169 04:2/T1
/169.5	=4 FES 038 MO+4 FES 038 MO-M21:V1	4LKD003AR/ 4FES038MO-B-01 U1000R2V 4G2.5 mm²	BK 2.5 mm²	'	2	BK 2.5 mm²	-QA 169 04:4/T2
/169.5	=4 FES 038 MO+4 FES 038 MO-M21:W1	4LKD003AR/ 4FES038MO-B-01 U1000R2V 4G2.5 mm²	GY 2.5 mm²	'	3	BK 2.5 mm²	-QA 169 04:6/T3

Terminal diagram

Strip

=4LKD001AR+4LKD003AR-X 170 09

A SIDE						B SIDE
Placement	Target designation	Cable name and type	Conductor	Jumper	Wiring	Target designation
/170.9	=4 FES 038 MO+4 FES 038 MO-X1:3	4LKD003AR/ 4FES038MO-C-01 U1000R2V 5G1.5 mm²	BN 1.5 mm²		WH 1 mm²	-Q 169 05:21
/170.9	=4 FES 038 MO+4 FES 038 MO-X1:8	4LKD003AR/ 4FES038MO-C-01 U1000R2V 5G1.5 mm²	GY 1.5 mm²		WH 1 mm²	-K 171 09:11
					WH 1 mm²	-KM 169 05:74
/170.9		4LKD003AR/ 4FES038MO-C-01 U1000R2V 5G1.5 mm²	BK 1.5 mm²		WH 1 mm²	-KM 169 05:73
					WH 1 mm²	-KM 169 07:73
					WH 1 mm²	-S 170 07.1:23
/170.15	=4 FES 038 MO+4 FES 038 MO-X1:10	4LKD003AR/ 4FES038MO-C-01 U1000R2V 5G1.5 mm²	BU 1.5 mm²		WH 1 mm²	-K 171 09:21
					WH 1 mm²	-S 170 07.1:43
					BN 1 mm²	-QA 169 04:14
					BN 1 mm²	-QA 169 04:A1

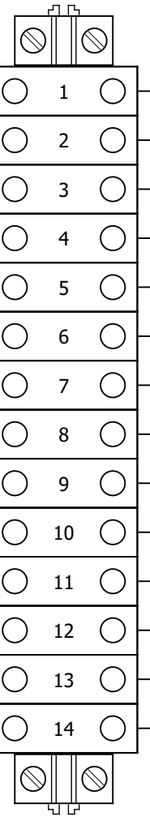

Date:	17.03.2026.	SINTAKSA A Voith Company	Client:	ANDRITZ TEP d.o.o. Ulica 108. brigade ZNG 84, 35000 Slavonski Brod, Croatia	Scope: BOILER/LOW VOLTAGE CABINET BOILER (NORMAL) 3	Project: BRC-4	Unit & Issuer: ATEP0	Number: 1874	Revision: G
Drawn:	Luka Božičević								#Y
Approved:	Grga Kolić		Object:	RDF Albioma Les Bois Rouge Reunion - France	Content: Terminal diagram =4LKD001AR+4LKD003AR-X 170 09	Drawing designation: BRC-4-ATEP0-1874-G			=4LKD001AR
Format:	A3								+4LKD003AR

Sheet: 606

Next: 607

Terminal diagram

Strip

=4LKD001AR+4LKD003AR-X 172 06

A SIDE						B SIDE
Placement	Target designation	Cable name and type	Conductor	Jumper	Wiring	Target designation
				1		
				2	RD 1 mm²	-KM 169 05:83
/172.13	=4 FES 038 MO+4 FES 038 MO-X1:5	4LKD003AR/ 4FES038MO-C-02 U1000R2V 7G1.5 mm²	1 1.5 mm²	3		
				4	3 1.5 mm²	=4 FES 038 MO+4 FES 038
				5		
				6	RD 1 mm²	-KM 169 05:84
				7	RD 1 mm²	-KM 169 07:84
				8	RD 1 mm²	-K 171 11:34
/172.13	=4 FES 038 MO+4 FES 038 MO-X1:6	4LKD003AR/ 4FES038MO-C-02 U1000R2V 7G1.5 mm²	2 1.5 mm²	9	RD 1 mm²	-K 171 09:31
				10	RD 1 mm²	-S 170 07.1:54
				11	4 1.5 mm²	=4 FES 038 MO+4 FES 038
				12		
				13		
				14		
				15		

Date:	17.03.2026.	SINTAKSA A Voith Company	Client:	ANDRITZ TEP d.o.o. Ulica 108. brigade ZNG 84, 35000 Slavonski Brod, Croatia	Scope: BOILER/LOW VOLTAGE CABINET BOILER (NORMAL) 3	Project: BRC-4	Unit & Issuer: ATEP0	Number: 1874	Revision: G
Drawn:	Luka Božičević								#Y
Approved:	Grga Kolić		Object:	RDF Albioma Les Bois Rouge Reunion - France	Content: Terminal diagram =4LKD001AR+4LKD003AR-X 172 06	Drawing designation: BRC-4-ATEP0-1874-G			=4LKD001AR
Format:	A3								+4LKD003AR

Sheet: 607
Next: 608

Terminal diagram

Strip

=4LKD001AR+4LKD003AR-X 174 05

A SIDE								B SIDE
Placement	Target designation	Cable name and type	Conductor	Jumper		Wiring	Target designation
/174.5	=4 FES 040 MO+4 FES 040 MO-M22:U1	4LKD003AR/ 4FES040MO-B-01 U1000R2V 4G2.5 mm²	BN 2.5 mm²	'	1	BK 2.5 mm²	-QA 174 04:2/T1
/174.5	=4 FES 040 MO+4 FES 040 MO-M22:V1	4LKD003AR/ 4FES040MO-B-01 U1000R2V 4G2.5 mm²	BK 2.5 mm²	'	2	BK 2.5 mm²	-QA 174 04:4/T2
/174.5	=4 FES 040 MO+4 FES 040 MO-M22:W1	4LKD003AR/ 4FES040MO-B-01 U1000R2V 4G2.5 mm²	GY 2.5 mm²	'	3	BK 2.5 mm²	-QA 174 04:6/T3

Date:	17.03.2026.	SINTAKSA A Voith Company	Client:	ANDRITZ TEP d.o.o. Ulica 108. brigade ZNG 84, 35000 Slavonski Brod, Croatia	Scope: BOILER/LOW VOLTAGE CABINET BOILER (NORMAL) 3	Project: BRC-4	Unit & Issuer: ATEP0	Number: 1874	Revision: G
Drawn:	Luka Božičević								#Y
Approved:	Grga Kolić		Object:	RDF Albioma Les Bois Rouge Reunion - France	Content: Terminal diagram =4LKD001AR+4LKD003AR-X 174 05	Drawing designation: BRC-4-ATEP0-1874-G			=4LKD001AR
Format:	A3								+4LKD003AR

Sheet: 608

Next: 609

Terminal diagram

Strip

=4LKD001AR+4LKD003AR-X 175 09

A SIDE							B SIDE
Placement	Target designation	Cable name and type	Conductor	Jumper		Wiring	Target designation
/175.9	=4 FES 040 MO+4 FES 040 MO-X1:3	4LKD003AR/ 4FES040MO-C-01 U1000R2V 5G1.5 mm²	BN 1.5 mm²		1	WH 1 mm²	-Q 174 05:21
/175.9	=4 FES 040 MO+4 FES 040 MO-X1:8	4LKD003AR/ 4FES040MO-C-01 U1000R2V 5G1.5 mm²	GY 1.5 mm²		2	WH 1 mm²	-K 176 09:11
					3	WH 1 mm²	-KM 174 05:74
/175.9		4LKD003AR/ 4FES040MO-C-01 U1000R2V 5G1.5 mm²	BK 1.5 mm²		4	WH 1 mm²	-KM 174 05:73
					5	WH 1 mm²	-KM 174 07:73
					6	WH 1 mm²	-S 175 07.1:23
/175.15	=4 FES 040 MO+4 FES 040 MO-X1:10	4LKD003AR/ 4FES040MO-C-01 U1000R2V 5G1.5 mm²	BU 1.5 mm²		7	WH 1 mm²	-K 176 09:21
					8	WH 1 mm²	-S 175 07.1:43
					9	BN 1 mm²	-S 176 11:22
						BN 1 mm²	-QA 174 04:14
					10	BN 1 mm²	-QA 174 04:A1
					11		
					12		
					13		
					14		

Date:	17.03.2026.	SINTAKSA A Voith Company	Client:	ANDRITZ TEP d.o.o. Ulica 108. brigade ZNG 84, 35000 Slavonski Brod, Croatia	Scope: BOILER/LOW VOLTAGE CABINET BOILER (NORMAL) 3	Project: BRC-4	Unit & Issuer: ATEP0	Number: 1874	Revision: G
Drawn:	Luka Božičević								#Y
Approved:	Grga Kolić		Object:	RDF Albioma Les Bois Rouge Reunion - France	Content: Terminal diagram =4LKD001AR+4LKD003AR-X 175 09	Drawing designation: BRC-4-ATEP0-1874-G			=4LKD001AR
Format:	A3								+4LKD003AR

Sheet: 609
Next: 610

Terminal diagram

Strip

=4LKD001AR+4LKD003AR-X 177 06

A SIDE						B SIDE
Placement	Target designation	Cable name and type	Conductor	Jumper	Wiring	Target designation
				1		
				2	RD 1 mm²	-KM 174 05:83
/177.13	=4 FES 040 MO+4 FES 040 MO-X1:5:A	4LKD003AR/ 4FES040MO-C-02 U1000R2V 7G1.5 mm²	1 1.5 mm²	3		
				4	3 1.5 mm²	=4 FES 040 MO+4 FES 040
				5		
				6	RD 1 mm²	-KM 174 05:84
				7	RD 1 mm²	-KM 174 07:84
				8	RD 1 mm²	-K 176 11:34
/177.13	=4 FES 040 MO+4 FES 040 MO-X1:6:A	4LKD003AR/ 4FES040MO-C-02 U1000R2V 7G1.5 mm²	2 1.5 mm²	9	RD 1 mm²	-K 176 09:31
				10	RD 1 mm²	-S 175 07.1:54
				11	4 1.5 mm²	=4 FES 040 MO+4 FES 040
				12		
				13		
				14		
				15		

Date:	17.03.2026.	SINTAKSA A Voith Company	Client:	ANDRITZ TEP d.o.o. Ulica 108. brigade ZNG 84, 35000 Slavonski Brod, Croatia	Scope: BOILER/LOW VOLTAGE CABINET BOILER (NORMAL) 3	Project: BRC-4	Unit & Issuer: ATEP0	Number: 1874	Revision: G
Drawn:	Luka Božičević								#Y
Approved:	Grga Kolić		Object:	RDF Albioma Les Bois Rouge Reunion - France	Content: Terminal diagram =4LKD001AR+4LKD003AR-X 177 06	Drawing designation: BRC-4-ATEP0-1874-G			=4LKD001AR
Format:	A3								+4LKD003AR

Sheet: 610
Next: 611

Terminal diagram

Strip

=4LKD001AR+4LKD003AR-X 179 05

A SIDE								B SIDE
Placement	Target designation	Cable name and type	Conductor	Jumper		Wiring	Target designation	
/179.5	=4 FES 050 MO+4 FES 050 MO-M23:U1	4LKD003AR/ 4FES050MO-B-01 U1000R2V 4G2.5 mm²	BN 2.5 mm²	'	1	BK 2.5 mm²	-KM 179 05:2/T1	
/179.5	=4 FES 050 MO+4 FES 050 MO-M23:V1	4LKD003AR/ 4FES050MO-B-01 U1000R2V 4G2.5 mm²	BK 2.5 mm²	'	2	BK 2.5 mm²	-KM 179 05:4/T2	
/179.5	=4 FES 050 MO+4 FES 050 MO-M23:W1	4LKD003AR/ 4FES050MO-B-01 U1000R2V 4G2.5 mm²	GY 2.5 mm²	'	3	BK 2.5 mm²	-KM 179 05:6/T3	

Date:	17.03.2026.	SINTAKSA A Voith Company	Client:	ANDRITZ TEP d.o.o. Ulica 108. brigade ZNG 84, 35000 Slavonski Brod, Croatia	Scope: BOILER/LOW VOLTAGE CABINET BOILER (NORMAL) 3	Project: BRC-4	Unit & Issuer: ATEP0	Number: 1874	Revision: G
Drawn:	Luka Božičević								#Y
Approved:	Grga Kolić		Object:	RDF Albioma Les Bois Rouge Reunion - France	Content: Terminal diagram =4LKD001AR+4LKD003AR-X 179 05	Drawing designation: BRC-4-ATEP0-1874-G			=4LKD001AR
Format:	A3								+4LKD003AR

Sheet: 611

Next: 612

Terminal diagram

Strip

=4LKD001AR+4LKD003AR-X 180 09

A SIDE						B SIDE
Placement	Target designation	Cable name and type	Conductor	Jumper	Wiring	Target designation
/180.9	=4 FES 050 MO+4 FES 050 MO-X1:3	4LKD003AR/ 4FES050MO-C-01 U1000R2V 5G1.5 mm²	BN 1.5 mm²		WH 1 mm²	-Q 179 05:21
/180.9	=4 FES 050 MO+4 FES 050 MO-X1:8	4LKD003AR/ 4FES050MO-C-01 U1000R2V 5G1.5 mm²	GY 1.5 mm²		WH 1 mm²	-K 181 10:11
					WH 1 mm²	-KM 179 05:74
/180.9		4LKD003AR/ 4FES050MO-C-01 U1000R2V 5G1.5 mm²	BK 1.5 mm²		WH 1 mm²	-KM 179 05:73
					WH 1 mm²	-KM 179 07:73
					WH 1 mm²	-S 180 07.1:23
/180.15	=4 FES 050 MO+4 FES 050 MO-X1:10	4LKD003AR/ 4FES050MO-C-01 U1000R2V 5G1.5 mm²	BU 1.5 mm²		WH 1 mm²	-K 181 10:21
					WH 1 mm²	-S 180 07.1:43

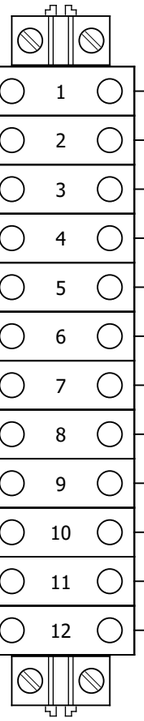

Date:	17.03.2026.	SINTAKSA A Voith Company	Client:	ANDRITZ TEP d.o.o. Ulica 108. brigade ZNG 84, 35000 Slavonski Brod, Croatia	Scope: BOILER/LOW VOLTAGE CABINET BOILER (NORMAL) 3	Project: BRC-4	Unit & Issuer: ATEP0	Number: 1874	Revision: G
Drawn:	Luka Božičević								#Y
Approved:	Grga Kolić		Object:	RDF Albioma Les Bois Rouge Reunion - France	Content: Terminal diagram =4LKD001AR+4LKD003AR-X 180 09	Drawing designation: BRC-4-ATEP0-1874-G			=4LKD001AR
Format:	A3								+4LKD003AR

Sheet: 612
Next: 613

Terminal diagram

Strip

=4LKD001AR+4LKD003AR-X 182 06

A SIDE							B SIDE
Placement	Target designation	Cable name and type	Conductor	Jumper		Wiring	Target designation
					1		
					2	RD 1 mm²	-KM 179 05:83
/182.11	=4 FES 050 MO+4 FES 050 MO-X1:5:A	4LKD003AR/ 4FES050MO-C-02 U1000R2V 12G1.5 mm²	1 1.5 mm²		3		
					4	3 1.5 mm²	=4 FES 050 MO+4 FES 050
					5	5 1.5 mm²	=4 FES 050 MO+4 FES 050
					6	RD 1 mm²	-KM 179 05:84
					7	RD 1 mm²	-KM 179 07:84
/182.11	=4 FES 050 MO+4 FES 050 MO-X1:6:A	4LKD003AR/ 4FES050MO-C-02 U1000R2V 12G1.5 mm²	2 1.5 mm²		8	RD 1 mm²	-K 181 10:31
					9	RD 1 mm²	-S 180 07.1:54
					10		
					11		
					12		
					13		
					14	4 1.5 mm²	=4 FES 050 MO+4 FES 050
					15	6 1.5 mm²	=4 FES 050 MO+4 FES 050
					16		
					17		
					18		

Date:	17.03.2026.	SINTAKSA A Voith Company	Client:	ANDRITZ TEP d.o.o. Ulica 108. brigade ZNG 84, 35000 Slavonski Brod, Croatia	Scope: BOILER/LOW VOLTAGE CABINET BOILER (NORMAL) 3	Project: BRC-4	Unit & Issuer: ATEP0	Number: 1874	Revision: G
Drawn:	Luka Božičević								#Y
Approved:	Grga Kolić		Object:	RDF Albioma Les Bois Rouge Reunion - France	Content: Terminal diagram =4LKD001AR+4LKD003AR-X 182 06	Drawing designation: BRC-4-ATEP0-1874-G		=4LKD001AR	Sheet: 613
Format:	A3							+4LKD003AR	Next: 614

Terminal diagram

Strip

=4LKD001AR+4LKD003AR-X 184 05

A SIDE									B SIDE
Placement	Target designation	Cable name and type	Conductor	Jumper			Wiring	Target designation
/184.5	=4 FDR 009 MO+4 FDR 009 MO-M:U1	4LKD003AR/ 4FDR009MO-B-01 U1000R2V 4G2.5 mm²	BN 2.5 mm²	'		1	BK 2.5 mm²	-KM 184 05:2/T1
/184.5	=4 FDR 009 MO+4 FDR 009 MO-M:V1	4LKD003AR/ 4FDR009MO-B-01 U1000R2V 4G2.5 mm²	BK 2.5 mm²	'		2	BK 2.5 mm²	-KM 184 05:4/T2
/184.5	=4 FDR 009 MO+4 FDR 009 MO-M:W1	4LKD003AR/ 4FDR009MO-B-01 U1000R2V 4G2.5 mm²	GY 2.5 mm²	'		3	BK 2.5 mm²	-KM 184 05:6/T3

Date:	17.03.2026.	SINTAKSA A Voith Company	Client:	ANDRITZ TEP d.o.o. Ulica 108. brigade ZNG 84, 35000 Slavonski Brod, Croatia	Scope: BOILER/LOW VOLTAGE CABINET BOILER (NORMAL) 3	Project: BRC-4	Unit & Issuer: ATEP0	Number: 1874	Revision: G
Drawn:	Luka Božičević								#Y
Approved:	Grga Kolić		Object:	RDF Albioma Les Bois Rouge Reunion - France	Content: Terminal diagram =4LKD001AR+4LKD003AR-X 184 05	Drawing designation: BRC-4-ATEP0-1874-G			=4LKD001AR
Format:	A3								+4LKD003AR

Sheet: 614

Next: 615

Terminal diagram

Strip

=4LKD001AR+4LKD003AR-X 185 09

A SIDE Placement	Target designation	Cable name and type	Conductor	Jumper	Strip	Wiring	B SIDE Target designation
/185.9	=4 FDR 009 MO+4 FDR 009 MO-X1:3	4LKD003AR/ 4FDR009MO-C-01 U1000R2V 5G1.5 mm²	BN 1.5 mm²		1	WH 1 mm²	-Q 184 05:21
/185.9	=4 FDR 009 MO+4 FDR 009 MO-X1:8	4LKD003AR/ 4FDR009MO-C-01 U1000R2V 5G1.5 mm²	BU 1.5 mm²		2	WH 1 mm²	-K 186 10:11
					3	WH 1 mm²	-KM 184 05:74
/185.9		4LKD003AR/ 4FDR009MO-C-01 U1000R2V 5G1.5 mm²	BK 1.5 mm²		4	WH 1 mm²	-KM 184 05:73
					5	WH 1 mm²	-KM 184 07:73
					6	WH 1 mm²	-S 185 07.1:23
/185.15	=4 FDR 009 MO+4 FDR 009 MO-X1:10	4LKD003AR/ 4FDR009MO-C-01 U1000R2V 5G1.5 mm²	GY 1.5 mm²		7	WH 1 mm²	-K 186 10:21
						WH 1 mm²	-KM 184 07:74
					8		
					9		
					10	WH 1 mm²	-S 185 07.1:43
					11		
					12		

Date:	17.03.2026.	SINTAKSA A Voith Company	Client:	ANDRITZ TEP d.o.o. Ulica 108. brigade ZNG 84, 35000 Slavonski Brod, Croatia	Scope: BOILER/LOW VOLTAGE CABINET BOILER (NORMAL) 3	Project: BRC-4	Unit & Issuer: ATEP0	Number: 1874	Revision: G
Drawn:	Luka Božičević								#Y
Approved:	Grga Kolić		Object:	RDF Albioma Les Bois Rouge Reunion - France	Content: Terminal diagram =4LKD001AR+4LKD003AR-X 185 09	Drawing designation: BRC-4-ATEP0-1874-G		=4LKD001AR	Sheet: 615
Format:	A3							+4LKD003AR	Next: 616

Terminal diagram

Strip

=4LKD001AR+4LKD003AR-X 187 06

A SIDE							B SIDE
Placement	Target designation	Cable name and type	Conductor	Jumper		Wiring	Target designation
					1		
					2	RD 1 mm²	-KM 184 05:83
/187.11	=4 FDR 009 MO+4 FDR 009 MO-X1:5	4LKD003AR/ 4FDR009MO-C-02 U1000R2V 12G1.5 mm²	1 1.5 mm²		3		
					4	3 1.5 mm²	=4 FDR 009 MO+4 FDR 009
					5	5 1.5 mm²	=4 FDR 009 MO+4 FDR 009
					6	RD 1 mm²	-KM 184 05:84
					7	RD 1 mm²	-KM 184 07:84
/187.11	=4 FDR 009 MO+4 FDR 009 MO-X1:6	4LKD003AR/ 4FDR009MO-C-02 U1000R2V 12G1.5 mm²	2 1.5 mm²		8	RD 1 mm²	-K 186 10:31
					9	RD 1 mm²	-S 185 07.1:54
					10		
					11		
					12		
					13		
					14	4 1.5 mm²	=4 FDR 009 MO+4 FDR 009
					15	6 1.5 mm²	=4 FDR 009 MO+4 FDR 009
					16		
					17		
					18		

Date:	17.03.2026.	SINTAKSA A Voith Company	Client:	ANDRITZ TEP d.o.o. Ulica 108. brigade ZNG 84, 35000 Slavonski Brod, Croatia	Scope: BOILER/LOW VOLTAGE CABINET BOILER (NORMAL) 3	Project: BRC-4	Unit & Issuer: ATEP0	Number: 1874	Revision: G
Drawn:	Luka Božičević								#Y
Approved:	Grga Kolić		Object:	RDF Albioma Les Bois Rouge Reunion - France	Content: Terminal diagram =4LKD001AR+4LKD003AR-X 187 06	Drawing designation: BRC-4-ATEP0-1874-G			=4LKD001AR
Format:	A3								+4LKD003AR

Sheet: 616
Next: 617

Terminal diagram

Strip

=4LKD001AR+4LKD003AR-XB 189 03

A SIDE						B SIDE
Placement	Target designation	Cable name and type	Conductor	Jumper	Wiring	Target designation
+4LKD002AR/96.5	+4LKD002AR-XB 096 03:6:A		GY 1 mm²	1	GY 1 mm²	-HL 163 02:2
				2	GY 1 mm²	-HL 170 02:2
				3	GY 1 mm²	-HL 175 02:2
				4	GY 1 mm²	-HL 180 02:2
				5	GY 1 mm²	-HL 185 02:2
+4LKD004AR/272.3	+4LKD004AR-XB 272 03:1:A		GY 1 mm²	6		

Date:	17.03.2026.	SINTAKSA A Voith Company	Client:	ANDRITZ TEP d.o.o. Ulica 108. brigade ZNG 84, 35000 Slavonski Brod, Croatia	Scope: BOILER/LOW VOLTAGE CABINET BOILER (NORMAL) 3	Project: BRC-4	Unit & Issuer: ATEP0	Number: 1874	Revision: G
Drawn:	Luka Božičević								#Y
Approved:	Grga Kolić		Object:	RDF Albioma Les Bois Rouge Reunion - France	Content: Terminal diagram =4LKD001AR+4LKD003AR-XB 189 03	Drawing designation: BRC-4-ATEP0-1874-G			=4LKD001AR
Format:	A3								+4LKD003AR

Sheet: 617

Next: 618

Terminal diagram

Strip

=4LKD001AR+4LKD003AR-XS 201 03

A SIDE						B SIDE
Placement	Target designation	Cable name and type	Conductor	Jumper	Wiring	Target designation
				1		
				2	RD 1 mm²	-QB 161 09:11
				3		
				4	RD 1 mm²	-QB 161 09:14
				5		
				6		
				7		
				8		
				9		
				10		

Date:	17.03.2026.	SINTAKSA A Voith Company	Client:	ANDRITZ TEP d.o.o. Ulica 108. brigade ZNG 84, 35000 Slavonski Brod, Croatia	Scope: BOILER/LOW VOLTAGE CABINET BOILER (NORMAL) 3	Project: BRC-4	Unit & Issuer: ATEP0	Number: 1874	Revision: G
Drawn:	Luka Božičević								#Y
Approved:	Grga Kolić		Object:	RDF Albioma Les Bois Rouge Reunion - France	Content: Terminal diagram =4LKD001AR+4LKD003AR-XS 201 03	Drawing designation: BRC-4-ATEP0-1874-G			=4LKD001AR
Format:	A3								+4LKD003AR

Sheet: 618

Next: 619

Terminal diagram

Strip

=4LKD001AR+4LKD003AR-XS 205 02

A SIDE						B SIDE
Placement	Target designation	Cable name and type	Conductor	Jumper	Wiring	Target designation
				1	GNYE 2.5 mm²	-PE
				2		
				3		
				4		
				5		
				6		
				7		
				8		
				9		
				10		
				11		
				12		
/205.12	=4 FES 038 MO+4 FES 038 MO-X1:?:A	4LKD003AR/ 4FES038MO-C-02 U1000R2V 7G1.5 mm²	5 1.5 mm²	13		
/205.13	=4 FES 038 MO+4 FES 038 MO-X1:?:A	4LKD003AR/ 4FES038MO-C-02 U1000R2V 7G1.5 mm²	6 1.5 mm²	14		
/205.4	=4 FES 008 MO+4 FES 008 MO-X1:?:A	4LKD003AR/ 4FES008MO-C-02 U1000R2V 27G1.5 mm²	21 1.5 mm²	15		
/205.5	=4 FES 008 MO+4 FES 008 MO-X1:?:A	4LKD003AR/ 4FES008MO-C-02 U1000R2V 27G1.5 mm²	22 1.5 mm²	16		
/205.6	=4 FES 008 MO+4 FES 008 MO-X1:?:A	4LKD003AR/ 4FES008MO-C-02 U1000R2V 27G1.5 mm²	23 1.5 mm²	17		
/205.7	=4 FES 008 MO+4 FES 008 MO-X1:?:A	4LKD003AR/ 4FES008MO-C-02 U1000R2V 27G1.5 mm²	24 1.5 mm²	18		
/205.8	=4 FES 008 MO+4 FES 008 MO-X1:?:A	4LKD003AR/ 4FES008MO-C-02 U1000R2V 27G1.5 mm²	25 1.5 mm²	19		
/205.8	=4 FES 008 MO+4 FES 008 MO-X1:?:A	4LKD003AR/ 4FES008MO-C-02 U1000R2V 27G1.5 mm²	26 1.5 mm²	20		
/205.4	=4 FDR 009 MO+4 FDR 009 MO-X1:?:A	4LKD003AR/ 4FDR009MO-C-02 U1000R2V 12G1.5 mm²	7 1.5 mm²	21		
/205.5	=4 FDR 009 MO+4 FDR 009 MO-X1:?:A	4LKD003AR/ 4FDR009MO-C-02 U1000R2V 12G1.5 mm²	8 1.5 mm²	22		
/205.6	=4 FDR 009 MO+4 FDR 009 MO-X1:?:A	4LKD003AR/ 4FDR009MO-C-02 U1000R2V 12G1.5 mm²	9 1.5 mm²	23		
/205.7	=4 FDR 009 MO+4 FDR 009 MO-X1:?:A	4LKD003AR/ 4FDR009MO-C-02 U1000R2V 12G1.5 mm²	10 1.5 mm²	24		
/205.8	=4 FDR 009 MO+4 FDR 009 MO-X1:?:A	4LKD003AR/ 4FDR009MO-C-02 U1000R2V 12G1.5 mm²	11 1.5 mm²	25		

Terminal diagram

Strip

=4LKD001AR+4LKD003AR-XS 205 02

A SIDE						B SIDE
Placement	Target designation	Cable name and type	Conductor	Jumper	Wiring	Target designation
/206.4	=4 FES 040 MO+4 FES 040 MO-X1:?:A	4LKD003AR/ 4FES040MO-C-02 U1000R2V 7G1.5 mm²	5 1.5 mm²	26		
/206.5	=4 FES 040 MO+4 FES 040 MO-X1:?:A	4LKD003AR/ 4FES040MO-C-02 U1000R2V 7G1.5 mm²	6 1.5 mm²	27		
/206.4	=4 FES 050 MO+4 FES 050 MO-X1:?:A	4LKD003AR/ 4FES050MO-C-02 U1000R2V 12G1.5 mm²	7 1.5 mm²	28		
/206.5	=4 FES 050 MO+4 FES 050 MO-X1:?:A	4LKD003AR/ 4FES050MO-C-02 U1000R2V 12G1.5 mm²	8 1.5 mm²	29		
/206.6	=4 FES 050 MO+4 FES 050 MO-X1:?:A	4LKD003AR/ 4FES050MO-C-02 U1000R2V 12G1.5 mm²	9 1.5 mm²	30		
/206.7	=4 FES 050 MO+4 FES 050 MO-X1:?:A	4LKD003AR/ 4FES050MO-C-02 U1000R2V 12G1.5 mm²	10 1.5 mm²	31		
/206.8	=4 FES 050 MO+4 FES 050 MO-X1:?:A	4LKD003AR/ 4FES050MO-C-02 U1000R2V 12G1.5 mm²	11 1.5 mm²	32		
				33		
				34		
				35		
				36		
				37		

Date:	17.03.2026.	SINTAKSA A Voith Company	Client:	ANDRITZ TEP d.o.o. Ulica 108. brigade ZNG 84, 35000 Slavonski Brod, Croatia	Scope: BOILER/LOW VOLTAGE CABINET BOILER (NORMAL) 3	Project: BRC-4	Unit & Issuer: ATEP0	Number: 1874	Revision: G
Drawn:	Luka Božičević								#Y
Approved:	Grga Kolić		Object:	RDF Albioma Les Bois Rouge Reunion - France	Content: Terminal diagram =4LKD001AR+4LKD003AR-XS 205 02	Drawing designation: BRC-4-ATEP0-1874-G			=4LKD001AR
Format:	A3								+4LKD003AR

Sheet: 620

Next: +4LKD004AR/1

SINTAKSA
A Voith Company

Ulica Domovinskog rata 104C,
21 000 Split, Hrvatska / Croatia
OIB: 32357958120
T: +385 1 2310 273
www.sintaksa.hr

SCHÉMA DE CÂBLAGE ÉLECTRIQUE

Projet / tâche:

RDF Albioma Les Bois Rouge
Reunion - France

Cadre:

BOILER/LOW VOLTAGE
CABINET BOILER (NORMAL)
4
+4LKD004AR

Client / acheteur:

ANDRITZ TEP d.o.o.
Ulica 108. brigade ZNG 84, 35000
Slavonski Brod, Croatia

Code du document:

BRC-4-ATEP0-1874-G

Date:
17.03.2026.

Date:	17.03.2026.	SINTAKSA A Voith Company	Client:	ANDRITZ TEP d.o.o. Ulica 108. brigade ZNG 84, 35000 Slavonski Brod, Croatia	Scope: BOILER/LOW VOLTAGE CABINET BOILER (NORMAL) 4	Project: BRC-4	Unit & Issuer: ATEP0	Number: 1874	Revision: G
Drawn:	Luka Božičević								#A
Approved:	Grga Kolić		Object:	RDF Albioma Les Bois Rouge Reunion - France	Content: TITLE PAGE	Drawing designation: BRC-4-ATEP0-1874-G			=4LKD001AR
Format:	A3								+4LKD004AR

Sheet: 1
Next: 2

Table of contents

Page number	Page description	Remarks of creator	Date	Checked by	Revision
2	TABLE OF CONTENTS		2026/06/17		
3	TABLE OF CONTENTS		2026/06/17		
251	400VAC DISTRIBUTION		2026/05/27		G
252	CHAIN CONVEYOR FOR DISTRIBUTION		2026/06/06		G
253	CHAIN CONVEYOR FOR DISTRIBUTION - CONTROL		2026/06/15		G
254	CHAIN CONVEYOR FOR DISTRIBUTION - CONTROL		2026/06/06		G
255	CHAIN CONVEYOR FOR DISTRIBUTION - SIGNALIZATION		2026/06/06		G
256	CHAIN CONVEYOR FOR DISTRIBUTION - SIGNALIZATION		2026/06/06		G
257	ROTARY DISPENSER BELOW ECO		2026/06/06		G
258	ROTARY DISPENSER BELOW ECO - CONTROL		2026/06/06		G
259	ROTARY DISPENSER BELOW ECO - CONTROL		2026/06/06		G
260	ROTARY DISPENSER BELOW ECO - SIGNALIZATION		2026/06/06		G
261	ROTARY DISPENSER BELOW ECO - SIGNALIZATION		2026/06/06		G
262	ROTARY DISPENSER BELOW SH 3		2026/06/06		G
263	ROTARY DISPENSER BELOW SH 3 - CONTROL		2026/06/06		G
264	ROTARY DISPENSER BELOW SH 3 - CONTROL		2026/06/06		G
265	ROTARY DISPENSER BELOW SH 3 - SIGNALIZATION		2026/06/06		G
266	ROTARY DISPENSER BELOW SH 3 - SIGNALIZATION		2026/06/06		G
267	CLOSED CHAIN CONVEYOR FOR ASH DISPATCH		2026/06/06		G
268	CLOSED CHAIN CONVEYOR FOR ASH DISPATCH - CONTROL		2026/06/06		G
269	CLOSED CHAIN CONVEYOR FOR ASH DISPATCH - CONTROL		2026/06/06		G
270	CLOSED CHAIN CONVEYOR FOR ASH DISPATCH - SIGNALIZATION		2026/06/06		G
271	CLOSED CHAIN CONVEYOR FOR ASH DISPATCH - SIGNALIZATION		2026/06/06		G
272	LAMP TEST		2026/06/06		G
291	SIGNALIZATION		2026/06/06		G
295	SPARE		2026/06/10		G
301	COMMUNICATION		2026/05/28		G
317	Terminal diagram =4LKD001AR+4LKD004AR-X 252 05		2026/05/28		F
318	Terminal diagram =4LKD001AR+4LKD004AR-X 253 09		2026/05/28		F
319	Terminal diagram =4LKD001AR+4LKD004AR-X 255 06		2026/05/28		F
320	Terminal diagram =4LKD001AR+4LKD004AR-X 257 05		2026/05/28		F
321	Terminal diagram =4LKD001AR+4LKD004AR-X 258 09		2026/05/28		F
322	Terminal diagram =4LKD001AR+4LKD004AR-X 260 06		2026/05/28		F

Table of contents

Page number	Page description	Remarks of creator	Date	Checked by	Revision
323	Terminal diagram =4LKD001AR+4LKD004AR-X 262 05		2026/05/28		F
324	Terminal diagram =4LKD001AR+4LKD004AR-X 263 09		2026/05/28		F
325	Terminal diagram =4LKD001AR+4LKD004AR-X 265 06		2026/05/28		F
326	Terminal diagram =4LKD001AR+4LKD004AR-X 267 05		2026/05/28		F
327	Terminal diagram =4LKD001AR+4LKD004AR-X 268 09		2026/05/28		F
328	Terminal diagram =4LKD001AR+4LKD004AR-X 270 06		2026/05/28		F
329	Terminal diagram =4LKD001AR+4LKD004AR-XB 272 03		2026/05/28		F
330	Terminal diagram =4LKD001AR+4LKD004AR-XS 291 03		2026/05/28		F
331	Terminal diagram =4LKD001AR+4LKD004AR-XS 295 02		2026/05/28		F
332	Terminal diagram =4LKD001AR+4LKD004AR-XS 295 02		2026/05/28		F
401	SUMMARIZED PARTS LIST		2026/05/28		
402	SUMMARIZED PARTS LIST		2026/06/08		

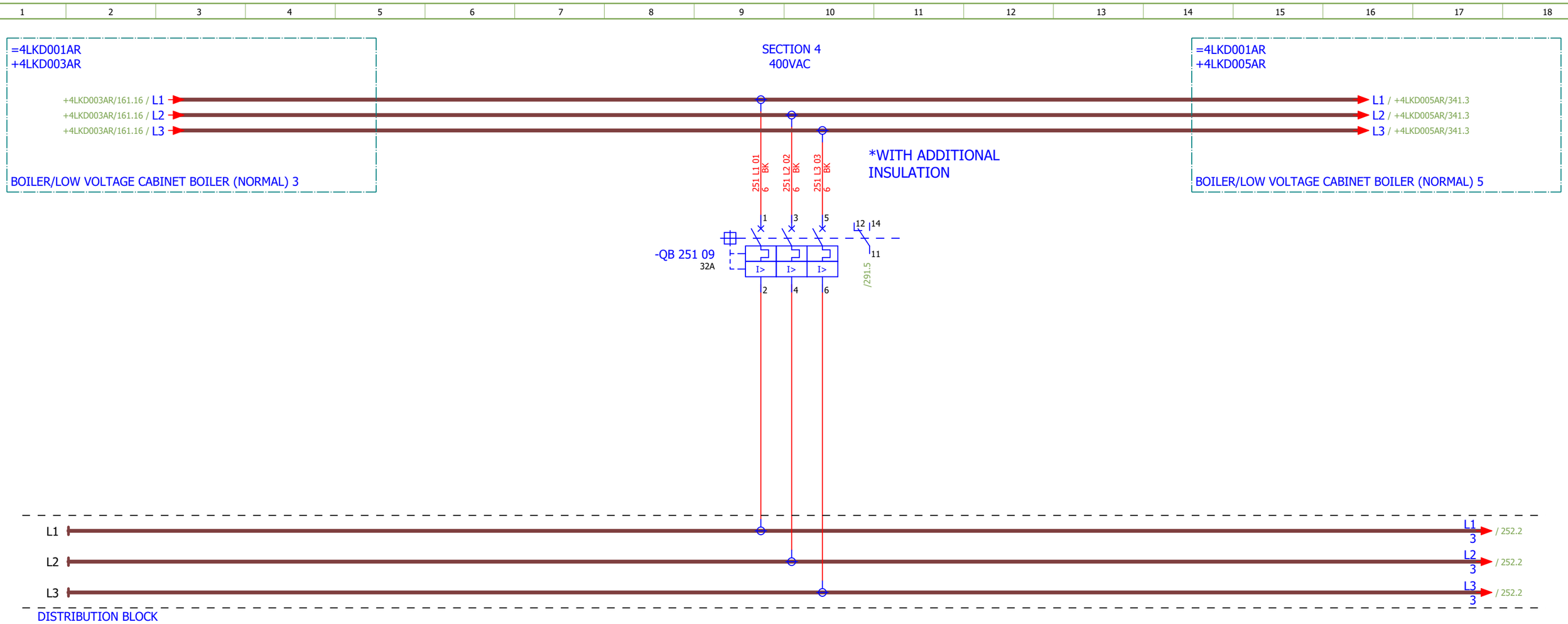

NOTE:
Conducteur de phase L1 avec manchon noir
Conducteur de phase L2 avec manchon marron
Conducteur de phase L3 avec manchon rouge

Date:	17.03.2026.	SINTAKSA A Voith Company	Client:	ANDRITZ TEP d.o.o. Ulica 108. brigade ZNG 84, 35000 Slavonski Brod, Croatia	Scope: BOILER/LOW VOLTAGE CABINET BOILER (NORMAL) 4	Project: BRC-4	Unit & Issuer: ATEP0	Number: 1874	Revision: G
Drawn:	Luka Božičević								#D
Approved:	Grga Kolić		Object:	RDF Albioma Les Bois Rouge Reunion - France	Content: 400VAC DISTRIBUTION	Drawing designation: BRC-4-ATEP0-1874-G			=4LKD001AR
Format:	A3								+4LKD004AR

Sheet: 251
Next: 252

[4 FES 024 MO]
CHAIN CONVEYOR FOR DISTRIBUTION

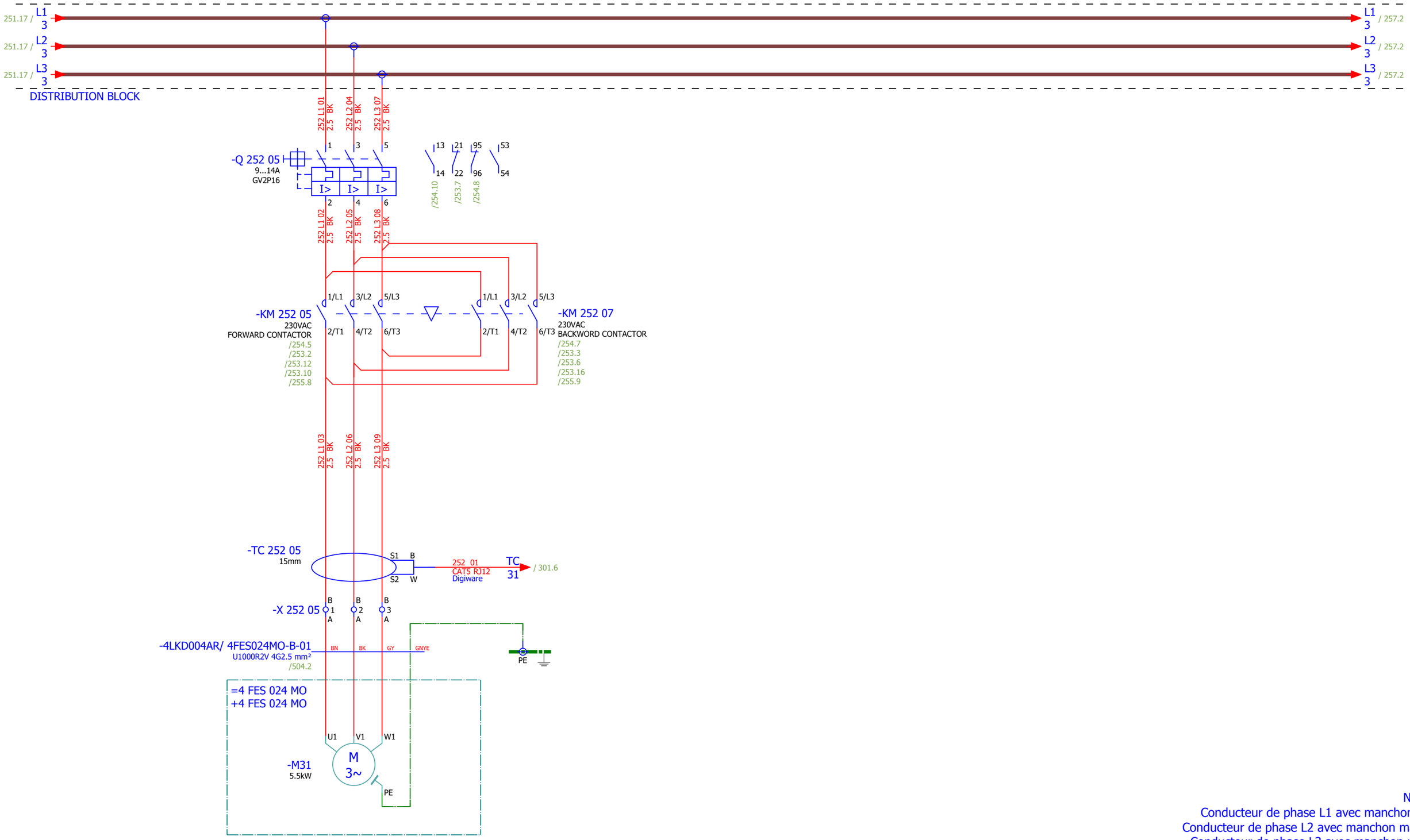

NOTE:
Conducteur de phase L1 avec manchon noir
Conducteur de phase L2 avec manchon marron
Conducteur de phase L3 avec manchon rouge

Date:	17.03.2026.	SINTAKSA A Voith Company	Client:	ANDRITZ TEP d.o.o. Ulica 108. brigade ZNG 84, 35000 Slavonski Brod, Croatia	Scope: BOILER/LOW VOLTAGE CABINET BOILER (NORMAL) 4	Project: BRC-4	Unit & Issuer: ATEP0	Number: 1874	Revision: G
Drawn:	Luka Božičević								#D
Approved:	Grga Kolić		Object:	RDF Albioma Les Bois Rouge Reunion - France	Content: CHAIN CONVEYOR FOR DISTRIBUTION	Drawing designation: BRC-4-ATEP0-1874-G		=4LKD001AR	Sheet: 252
Format:	A3							+4LKD004AR	Next: 253

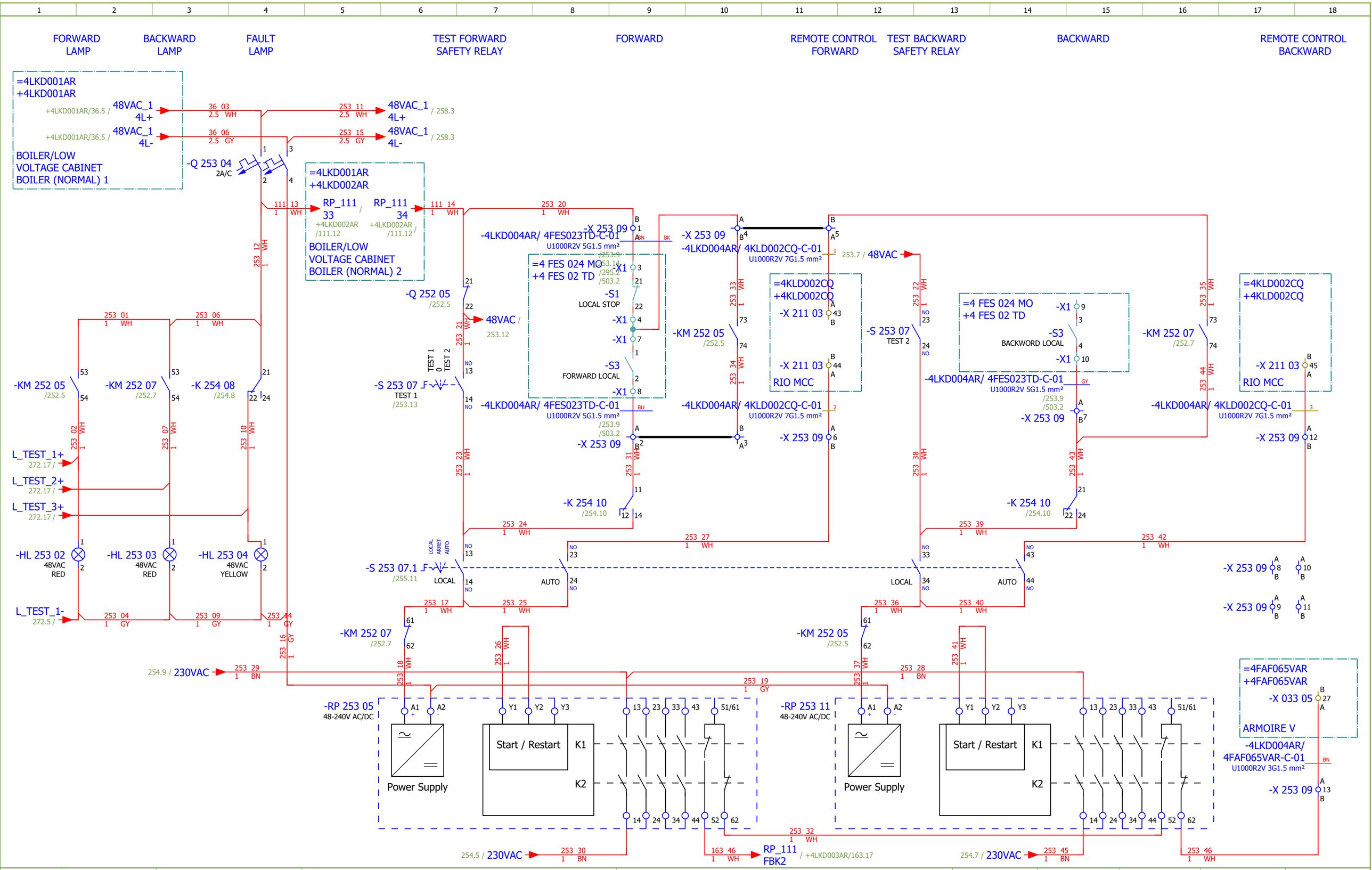

Date:	17.03.2026.	SINTAKSA A Voith Company	Client: ANDRITZ TEP d.o.o. Ulica 108. brigade ZNG 84, 35000 Slavonski Brod, Croatia	Scope: BOILER/LOW VOLTAGE CABINET BOILER (NORMAL) 4	Project: BRC-4	Unit & Issuer: ATEP0	Number: 1874	Revision: G	
Drawn:	Luka Božičević								#D
Approved:	Grga Kolić		Object: RDF Albioma Les Bois Rouge Reunion - France	Content: CHAIN CONVEYOR FOR DISTRIBUTION - CONTROL	Drawing designation: BRC-4-ATEP0-1874-G			=4LKD001AR	Sheet: 253
Format:	A3							+4LKD004AR	Next: 254

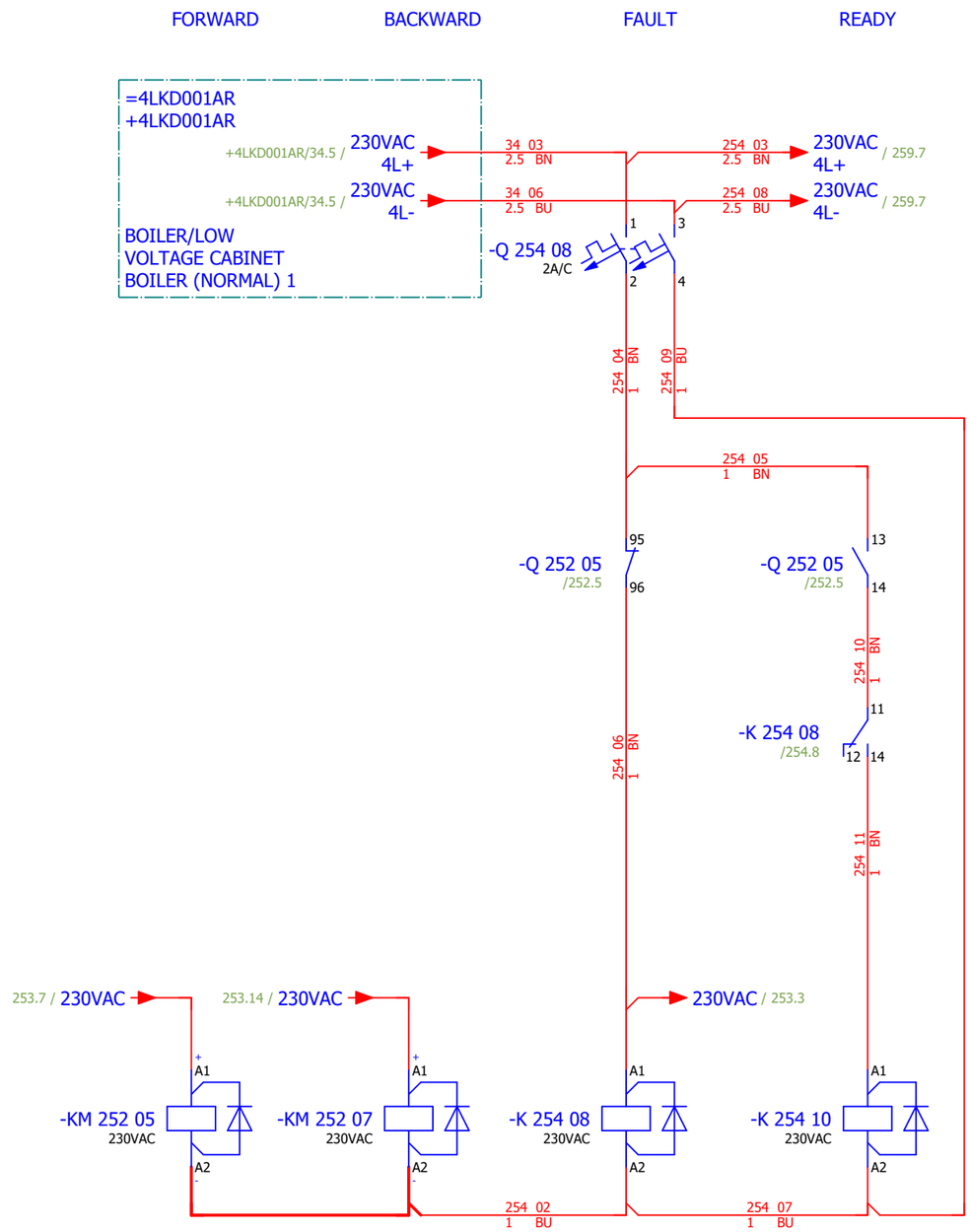

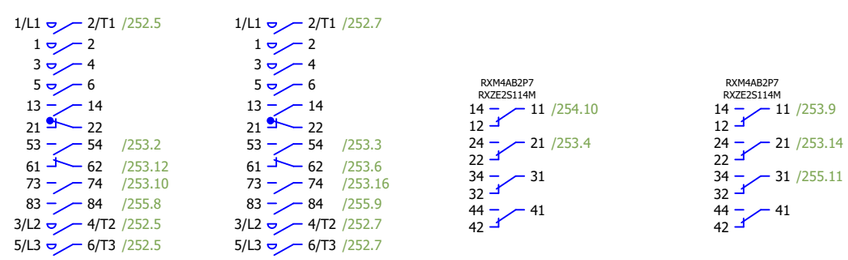

Date:	17.03.2026.	SINTAKSA A Voith Company	Client: ANDRITZ TEP d.o.o. Ulica 108. brigade ZNG 84, 35000 Slavonski Brod, Croatia	Scope: BOILER/LOW VOLTAGE CABINET BOILER (NORMAL) 4	Project: BRC-4	Unit & Issuer: ATEP0	Number: 1874	Revision: G	
Drawn:	Luka Božičević								#D
Approved:	Grga Kolić		Object: RDF Albioma Les Bois Rouge Reunion - France	Content: CHAIN CONVEYOR FOR DISTRIBUTION - CONTROL	Drawing designation: BRC-4-ATEP0-1874-G			=4LKD001AR	Sheet: 254
Format:	A3							+4LKD004AR	Next: 255

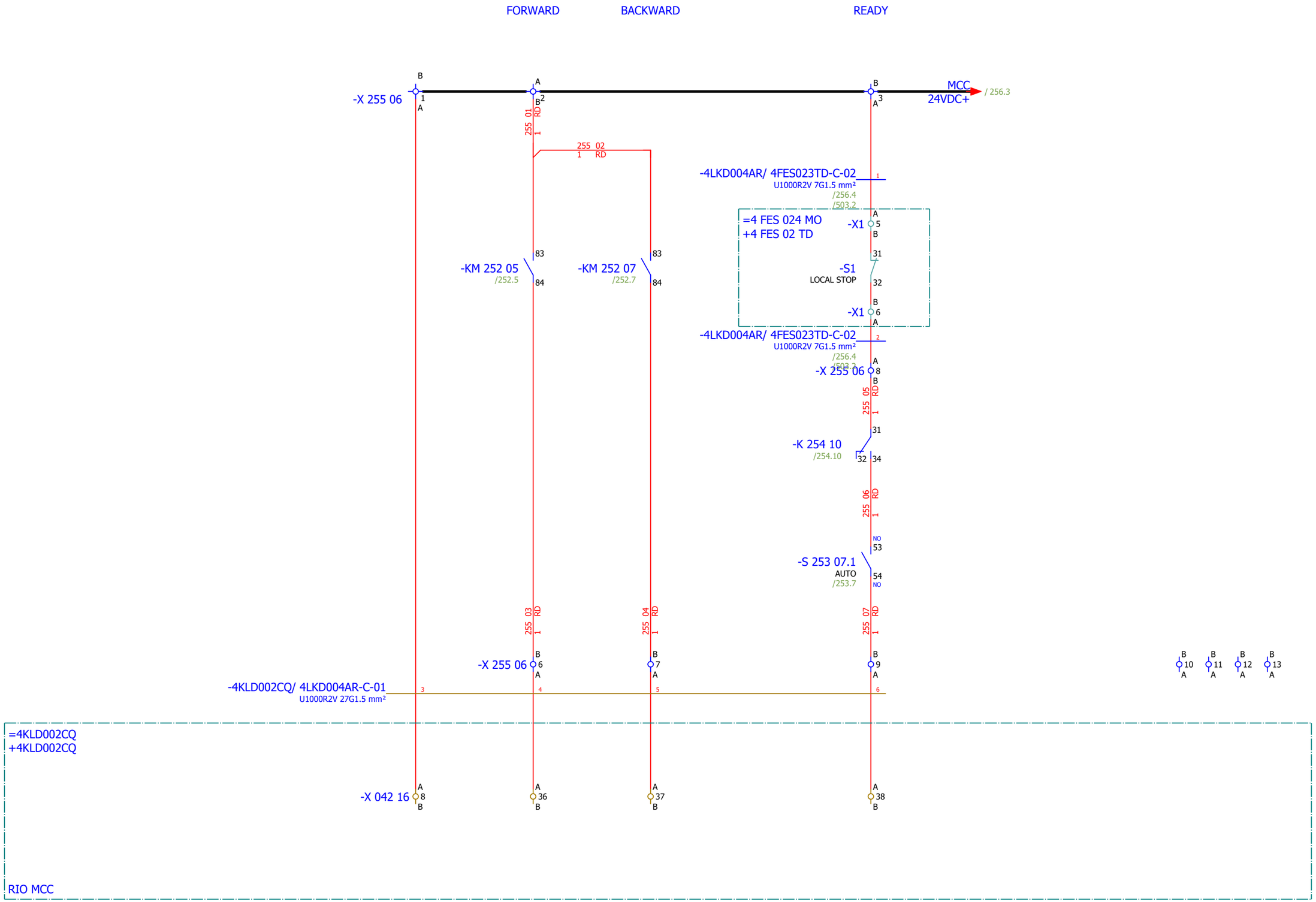

Date:	17.03.2026.	SINTAKSA A Voith Company	Client:	ANDRITZ TEP d.o.o. Ulica 108. brigade ZNG 84, 35000 Slavonski Brod, Croatia	Scope:	BOILER/LOW VOLTAGE CABINET BOILER (NORMAL) 4	Project: BRC-4	Unit & Issuer: ATEP0	Number: 1874	Revision: G	#D
Drawn:	Luka Božičević										
Approved:	Grga Kolić		Object:	RDF Albioma Les Bois Rouge Reunion - France	Content:	CHAIN CONVEYOR FOR DISTRIBUTION - SIGNALIZATION	Drawing designation: BRC-4-ATEP0-1874-G			=4LKD001AR	Sheet: 255
Format:	A3									+4LKD004AR	Next: 256

CHAIN CONVEYOR FOR
DISTRIBUTION - "0" PULSE

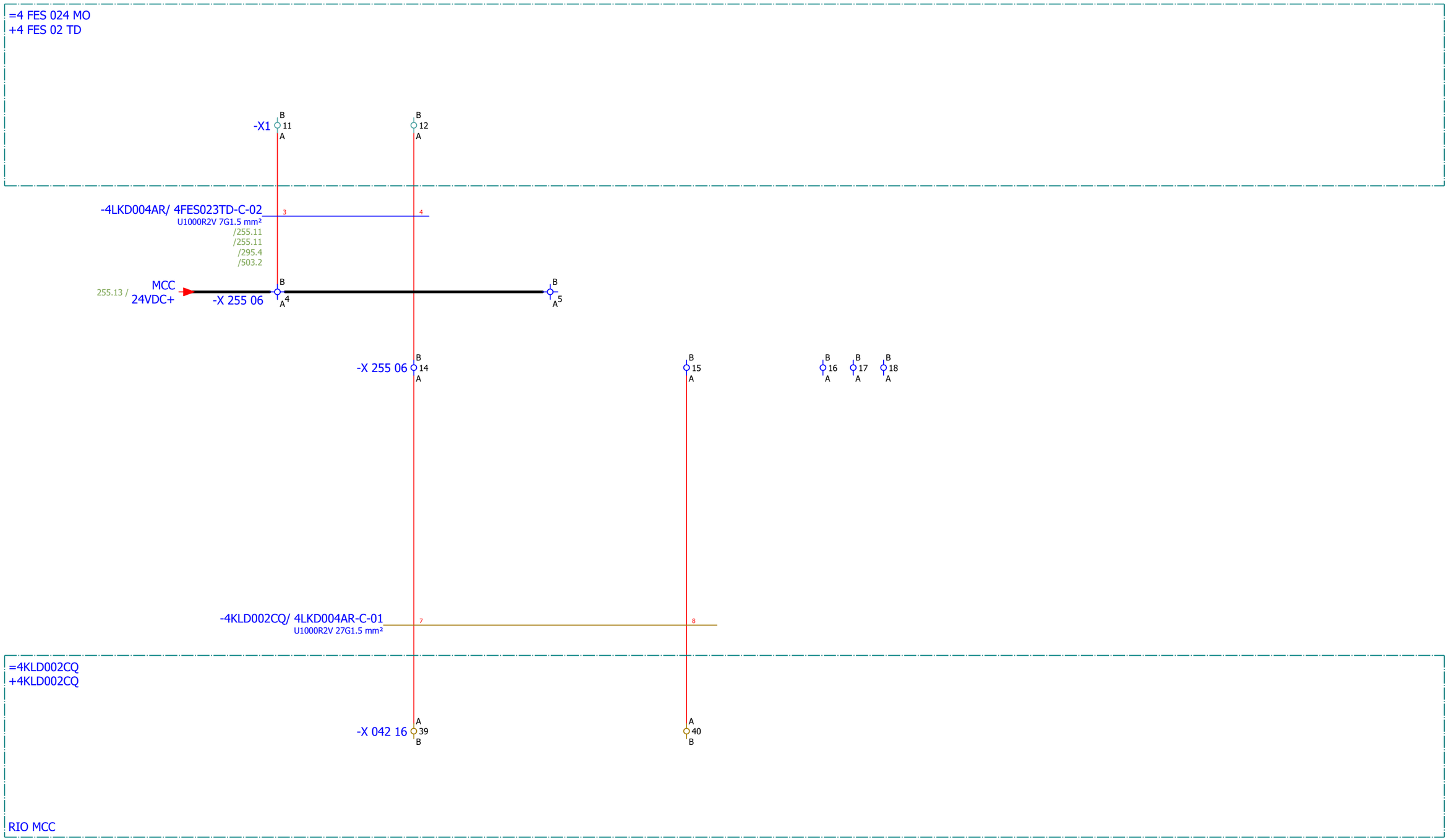

Date:	17.03.2026.	SINTAKSA A Voith Company	Client: ANDRITZ TEP d.o.o. Ulica 108. brigade ZNG 84, 35000 Slavonski Brod, Croatia	Scope: BOILER/LOW VOLTAGE CABINET BOILER (NORMAL) 4	Project: BRC-4	Unit & Issuer: ATEP0	Number: 1874	Revision: G	
Drawn:	Luka Božičević								#D
Approved:	Grga Kolić		Object: RDF Albioma Les Bois Rouge Reunion - France	Content: CHAIN CONVEYOR FOR DISTRIBUTION - SIGNALIZATION	Drawing designation: BRC-4-ATEP0-1874-G			=4LKD001AR	Sheet: 256
Format:	A3							+4LKD004AR	Next: 257

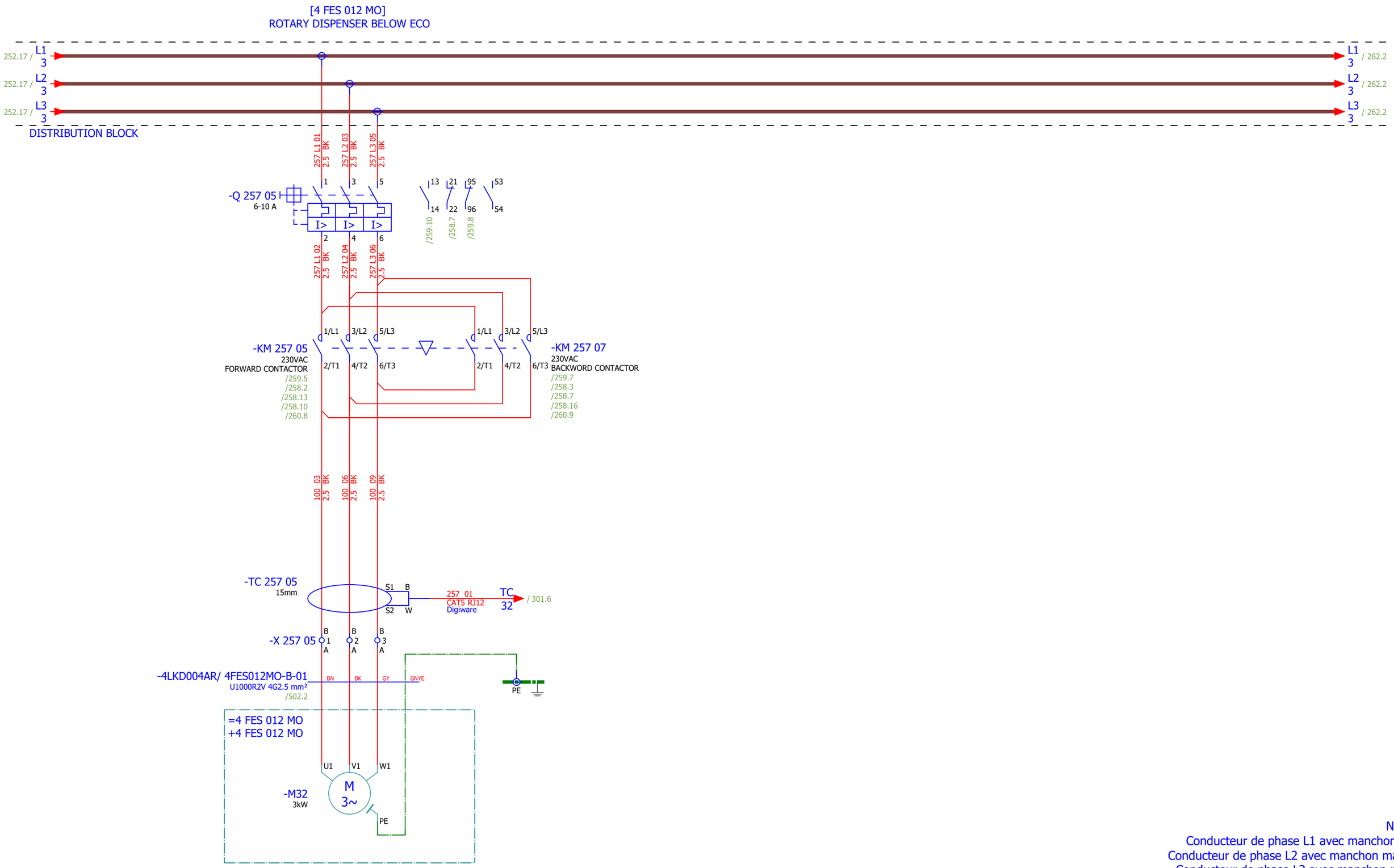

NOTE:
Conducteur de phase L1 avec manchon noir
Conducteur de phase L2 avec manchon marron
Conducteur de phase L3 avec manchon rouge

Date:	17.03.2026.	SINTAKSA A Voith Company	Client:	ANDRITZ TEP d.o.o. Ulica 108. brigade ZNG 84, 35000 Slavonski Brod, Croatia	Scope: BOILER/LOW VOLTAGE CABINET BOILER (NORMAL) 4	Project: BRC-4	Unit & Issuer: ATEP0	Number: 1874	Revision: G
Drawn:	Luka Božičević								#D
Approved:	Grga Kolić		Object:	RDF Albioma Les Bois Rouge Reunion - France	Content: ROTARY DISPENSER BELOW ECO	Drawing designation: BRC-4-ATEP0-1874-G		=4LKD001AR	Sheet: 257
Format:	A3							+4LKD004AR	Next: 258

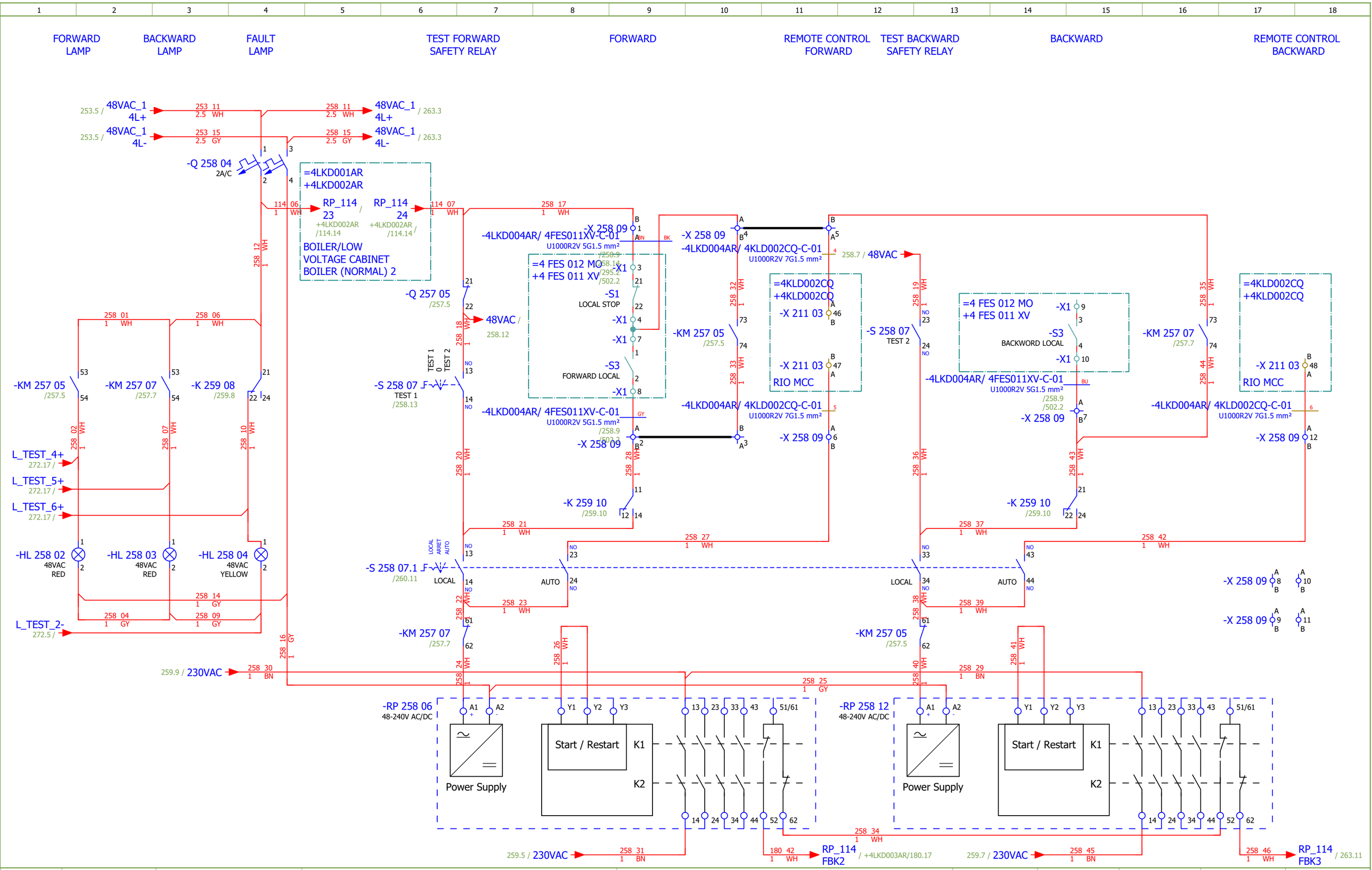

Date:	17.03.2026.	SINTAKSA A Voith Company	Client:	ANDRITZ TEP d.o.o. Ulica 108. brigade ZNG 84, 35000 Slavonski Brod, Croatia	Scope:	BOILER/LOW VOLTAGE CABINET BOILER (NORMAL) 4	Project: BRC-4	Unit & Issuer: ATEP0	Number: 1874	Revision: G	#D
Drawn:	Luka Božičević		Object:	RDF Albioma Les Bois Rouge Reunion - France	Content:	ROTARY DISPENSER BELOW ECO - CONTROL	Drawing designation: BRC-4-ATEP0-1874-G			=4LKD001AR	Sheet: 258
Approved:	Grga Kolić									+4LKD004AR	Next: 259
Format:	A3										

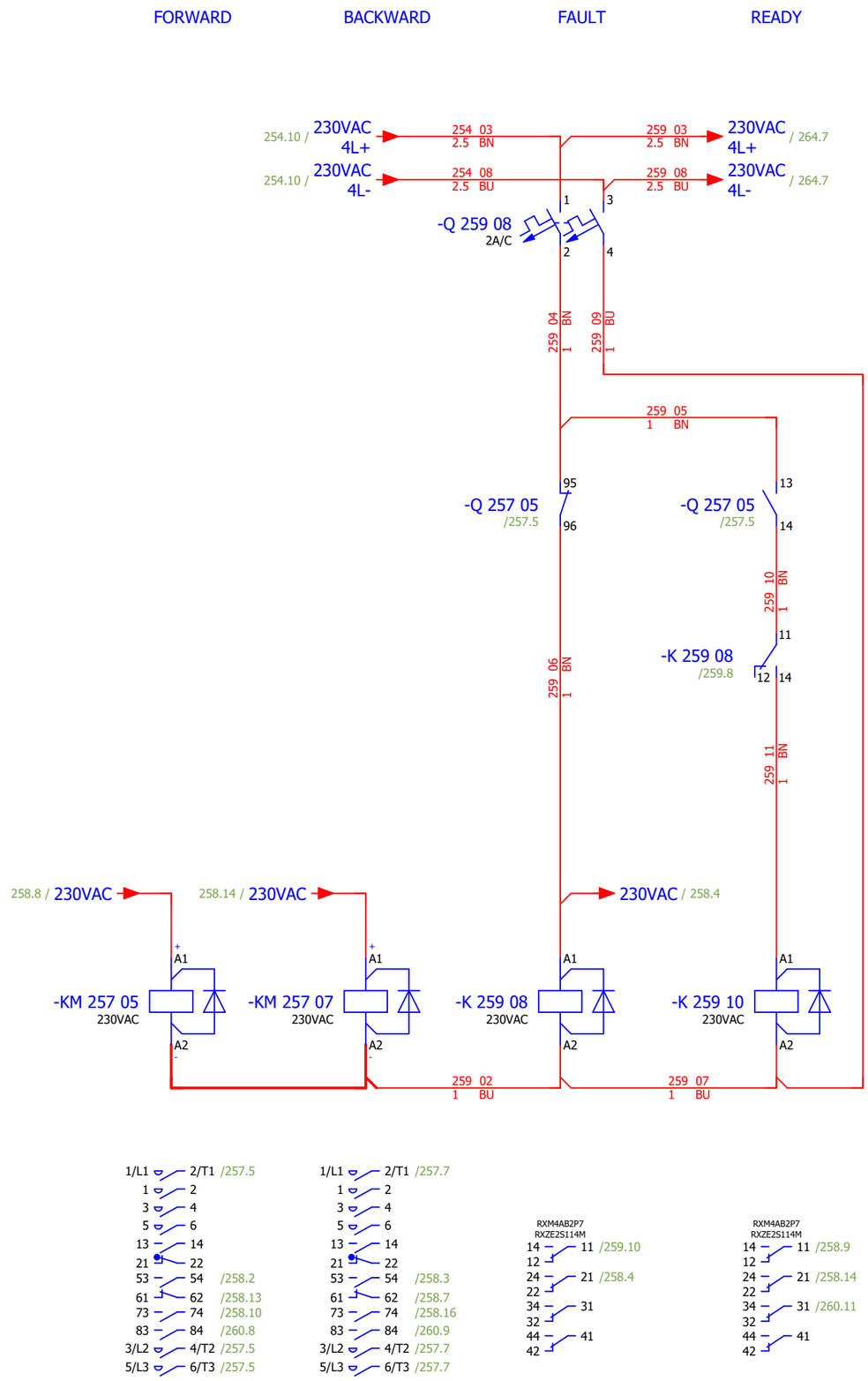

Date:	17.03.2026.	SINTAKSA A Voith Company	Client: ANDRITZ TEP d.o.o. Ulica 108. brigade ZNG 84, 35000 Slavonski Brod, Croatia	Scope: BOILER/LOW VOLTAGE CABINET BOILER (NORMAL) 4	Project: BRC-4	Unit & Issuer: ATEP0	Number: 1874	Revision: G
Drawn:	Luka Božičević							#D
Approved:	Grga Kolić		Object: RDF Albioma Les Bois Rouge Reunion - France	Content: ROTARY DISPENSER BELOW ECO - CONTROL	Drawing designation: BRC-4-ATEP0-1874-G			=4LKD001AR
Format:	A3							+4LKD004AR

Sheet: 259
Next: 260

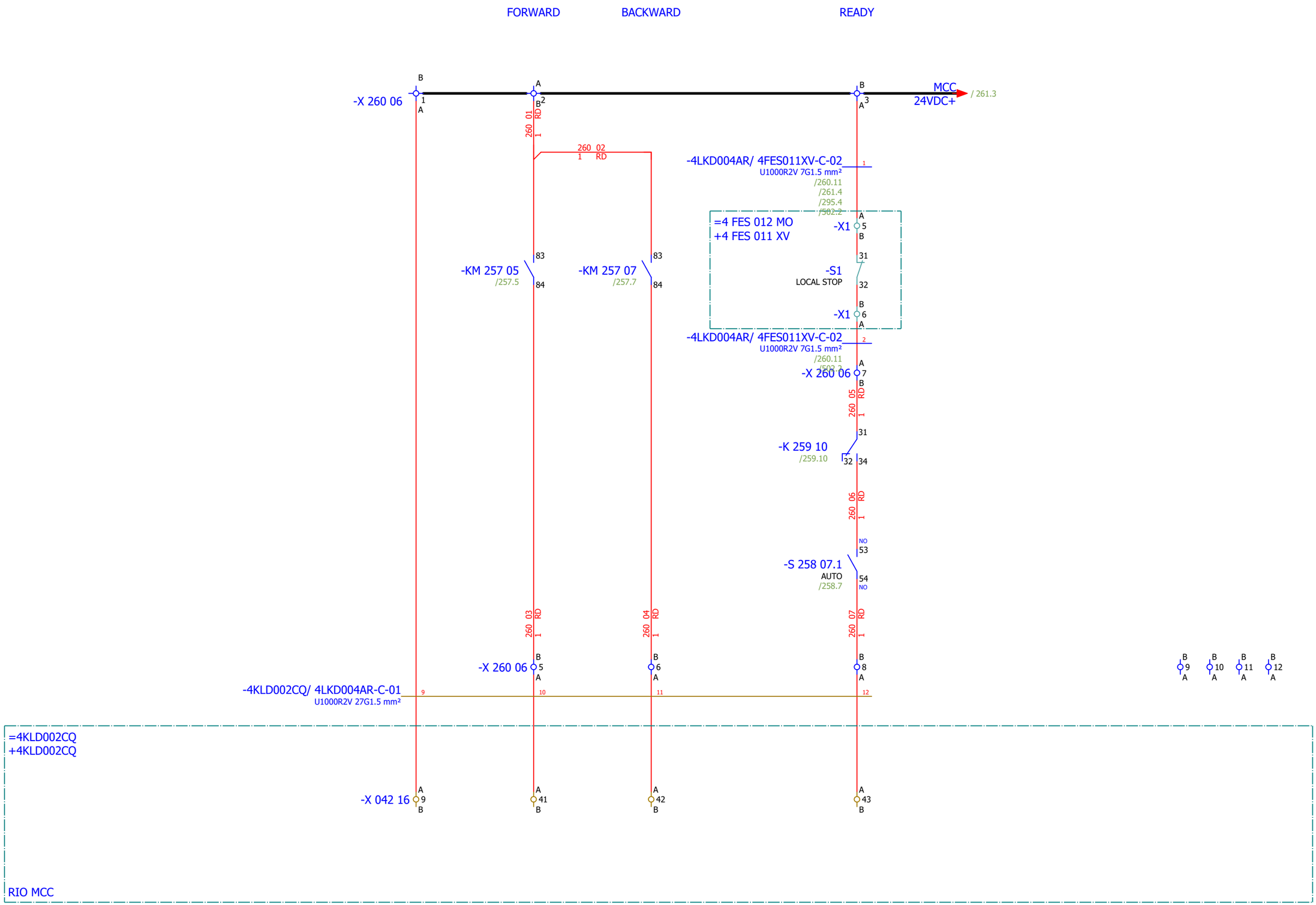

Date:	17.03.2026.	SINTAKSA A Voith Company	Client:	ANDRITZ TEP d.o.o. Ulica 108. brigade ZNG 84, 35000 Slavonski Brod, Croatia	Scope: BOILER/LOW VOLTAGE CABINET BOILER (NORMAL) 4	Project: BRC-4	Unit & Issuer: ATEP0	Number: 1874	Revision: G
Drawn:	Luka Božičević								#D
Approved:	Grga Kolić		Object:	RDF Albioma Les Bois Rouge Reunion - France	Content: ROTARY DISPENSER BELOW ECO - SIGNALIZATION	Drawing designation: BRC-4-ATEP0-1874-G		=4LKD001AR	Sheet: 260
Format:	A3							+4LKD004AR	Next: 261

ROTARY DISPENSER BELOW
ECO - "0" PULSE

=4 FES 012 MO
+4 FES 011 XV

-X1 B 11 A

B 12 A

-4LKD004AR/ 4FES011XV-C-02
U1000R2V 7G1.5 mm²
/260.11
/502.2

3 4

260.13 / MCC
24VDC+

-X 260 06 B 4 A

-X 260 06 B 13 A

B 14 A B 15 A B 16 A

-4KLD002CQ/ 4LKD004AR-C-01
U1000R2V 27G1.5 mm²

13

=4KLD002CQ
+4KLD002CQ

-X 042 16 A 44 B

RIO MCC

Date:	17.03.2026.	SINTAKSA A Voith Company	Client:	ANDRITZ TEP d.o.o. Ulica 108. brigade ZNG 84, 35000 Slavonski Brod, Croatia	Scope:	BOILER/LOW VOLTAGE CABINET BOILER (NORMAL) 4	Project: BRC-4	Unit & Issuer: ATEP0	Number: 1874	Revision: G	
Drawn:	Luka Božičević										#D
Approved:	Grga Kolić		Object:	RDF Albioma Les Bois Rouge Reunion - France	Content:	ROTARY DISPENSER BELOW ECO - SIGNALIZATION	Drawing designation: BRC-4-ATEP0-1874-G			=4LKD001AR	Sheet: 261
Format:	A3									+4LKD004AR	Next: 262

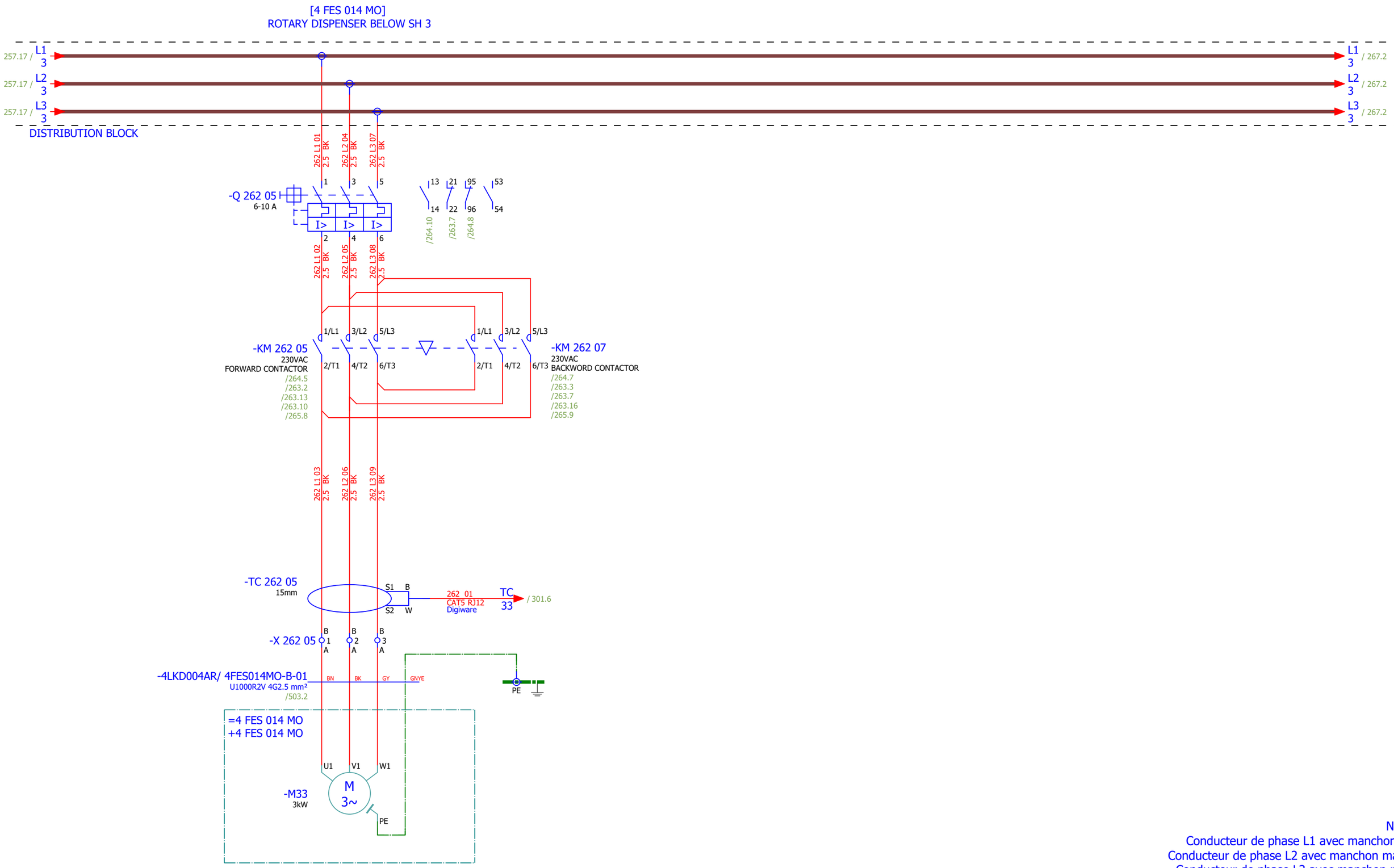

NOTE:
Conducteur de phase L1 avec manchon noir
Conducteur de phase L2 avec manchon marron
Conducteur de phase L3 avec manchon rouge

Date:	17.03.2026.	SINTAKSA A Voith Company	Client:	ANDRITZ TEP d.o.o. Ulica 108. brigade ZNG 84, 35000 Slavonski Brod, Croatia	Scope: BOILER/LOW VOLTAGE CABINET BOILER (NORMAL) 4	Project: BRC-4	Unit & Issuer: ATEP0	Number: 1874	Revision: G
Drawn:	Luka Božičević								#D
Approved:	Grga Kolić		Object:	RDF Albioma Les Bois Rouge Reunion - France	Content: ROTARY DISPENSER BELOW SH 3	Drawing designation: BRC-4-ATEP0-1874-G		=4LKD001AR	Sheet: 262
Format:	A3							+4LKD004AR	Next: 263

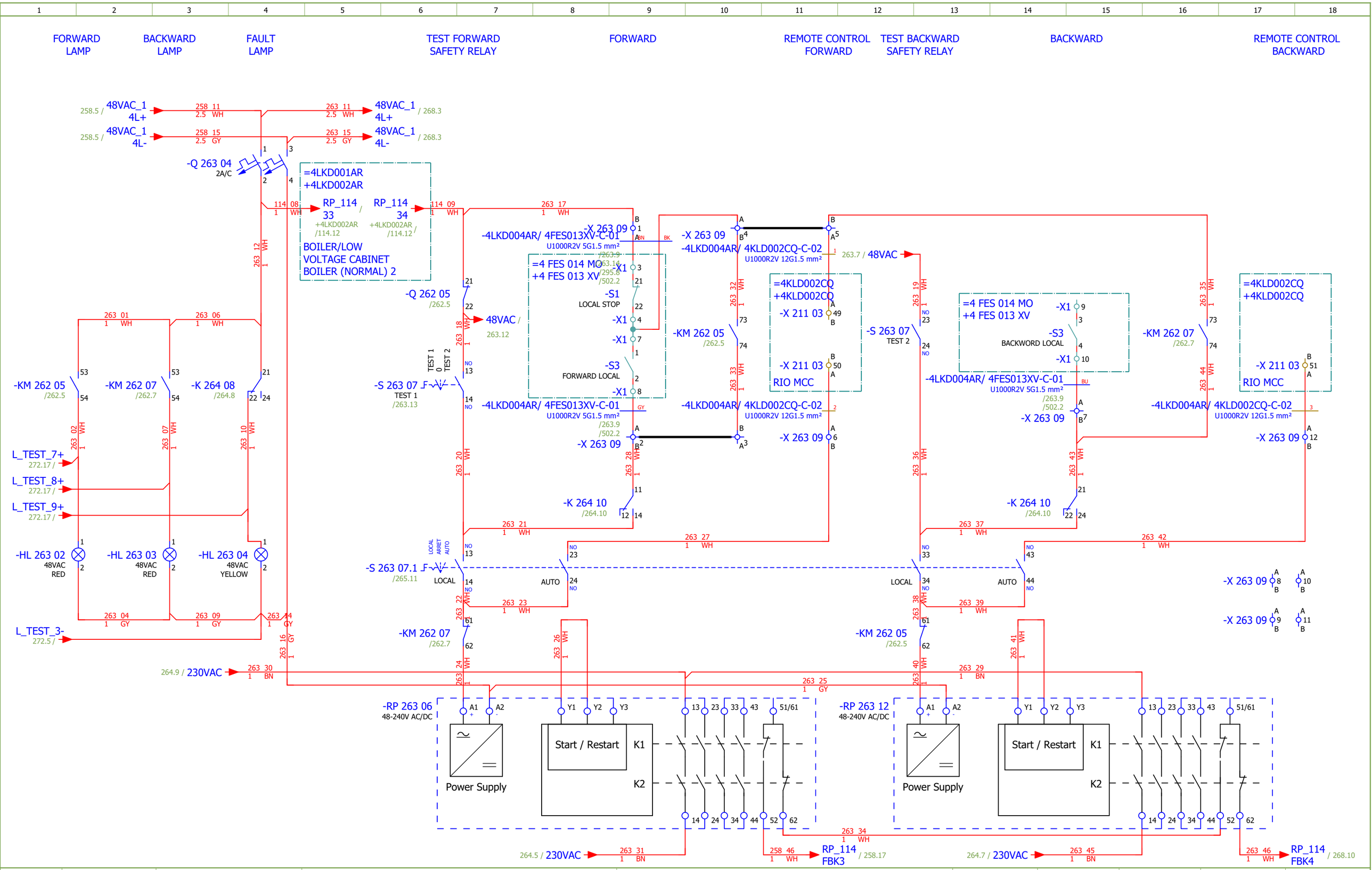

Date:	17.03.2026.	SINTAKSA A Voith Company	Client:	ANDRITZ TEP d.o.o. Ulica 108. brigade ZNG 84, 35000 Slavonski Brod, Croatia	Scope:	BOILER/LOW VOLTAGE CABINET BOILER (NORMAL) 4	Project: BRC-4	Unit & Issuer: ATEP0	Number: 1874	Revision: G	#D
Drawn:	Luka Božičević										
Approved:	Grga Kolić		Object:	RDF Albioma Les Bois Rouge Reunion - France	Content:	ROTARY DISPENSER BELOW SH 3 - CONTROL	Drawing designation: BRC-4-ATEP0-1874-G			=4LKD001AR	Sheet: 263
Format:	A3									+4LKD004AR	Next: 264

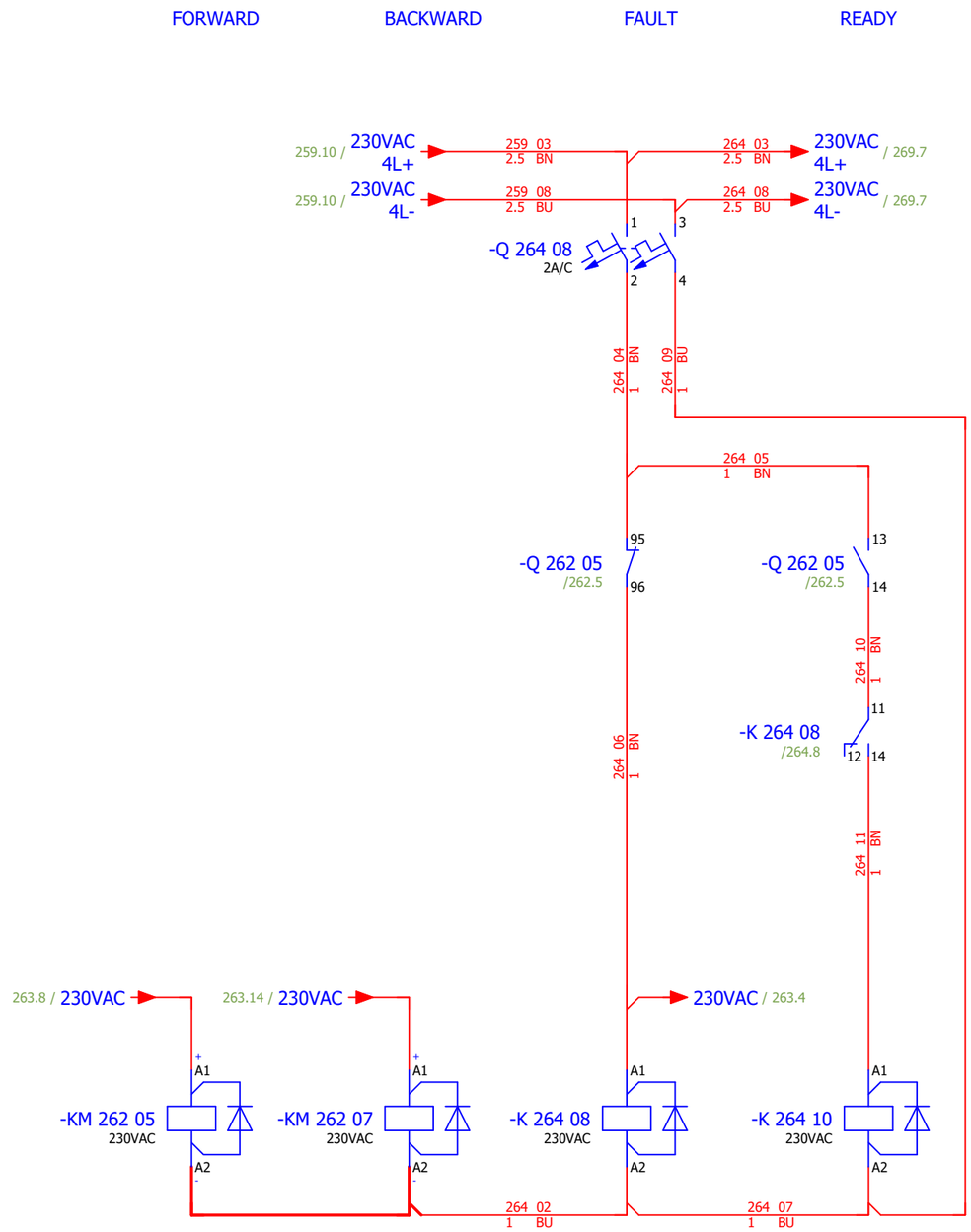

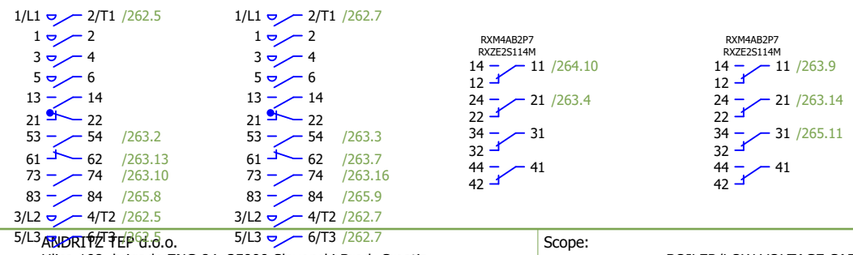

Date:	17.03.2026.	SINTAKSA A Voith Company	Client: ANDRITZ TEP d.o.o. Ulica 108. brigade ZNG 84, 35000 Slavonski Brod, Croatia	Scope: BOILER/LOW VOLTAGE CABINET BOILER (NORMAL) 4	Project: BRC-4	Unit & Issuer: ATEP0	Number: 1874	Revision: G	
Drawn:	Luka Božičević								#D
Approved:	Grga Kolić		Object: RDF Albioma Les Bois Rouge Reunion - France	Content: ROTARY DISPENSER BELOW SH 3 - CONTROL	Drawing designation: BRC-4-ATEP0-1874-G			=4LKD001AR	Sheet: 264
Format:	A3							+4LKD004AR	Next: 265

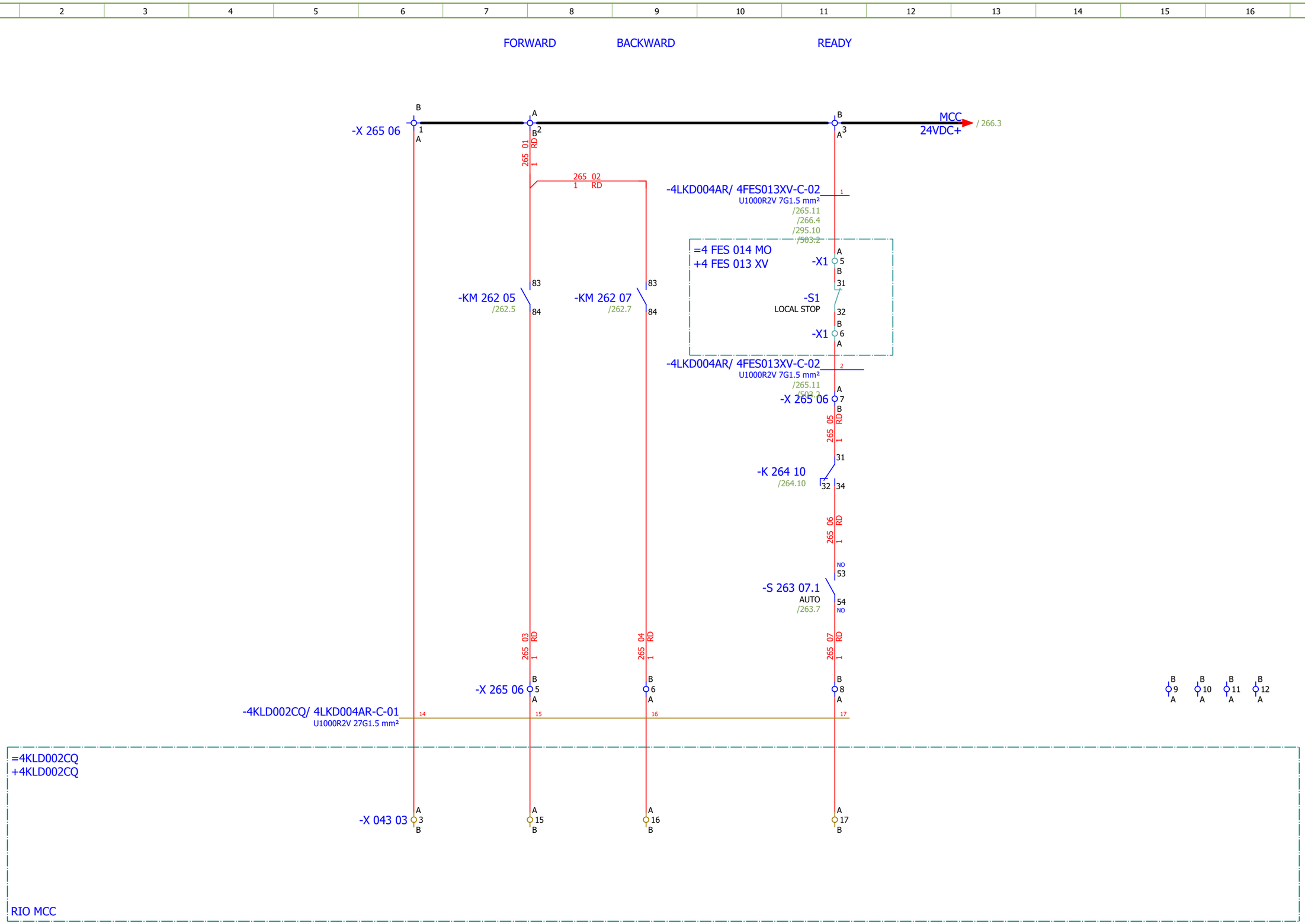

Date:	17.03.2026.	SINTAKSA A Voith Company	Client:	ANDRITZ TEP d.o.o. Ulica 108. brigade ZNG 84, 35000 Slavonski Brod, Croatia	Scope: BOILER/LOW VOLTAGE CABINET BOILER (NORMAL) 4	Project: BRC-4	Unit & Issuer: ATEP0	Number: 1874	Revision: G
Drawn:	Luka Božičević								#D
Approved:	Grga Kolić		Object:	RDF Albioma Les Bois Rouge Reunion - France	Content: ROTARY DISPENSER BELOW SH 3 - SIGNALIZATION	Drawing designation: BRC-4-ATEP0-1874-G			=4LKD001AR
Format:	A3								+4LKD004AR

Sheet: 265
Next: 266

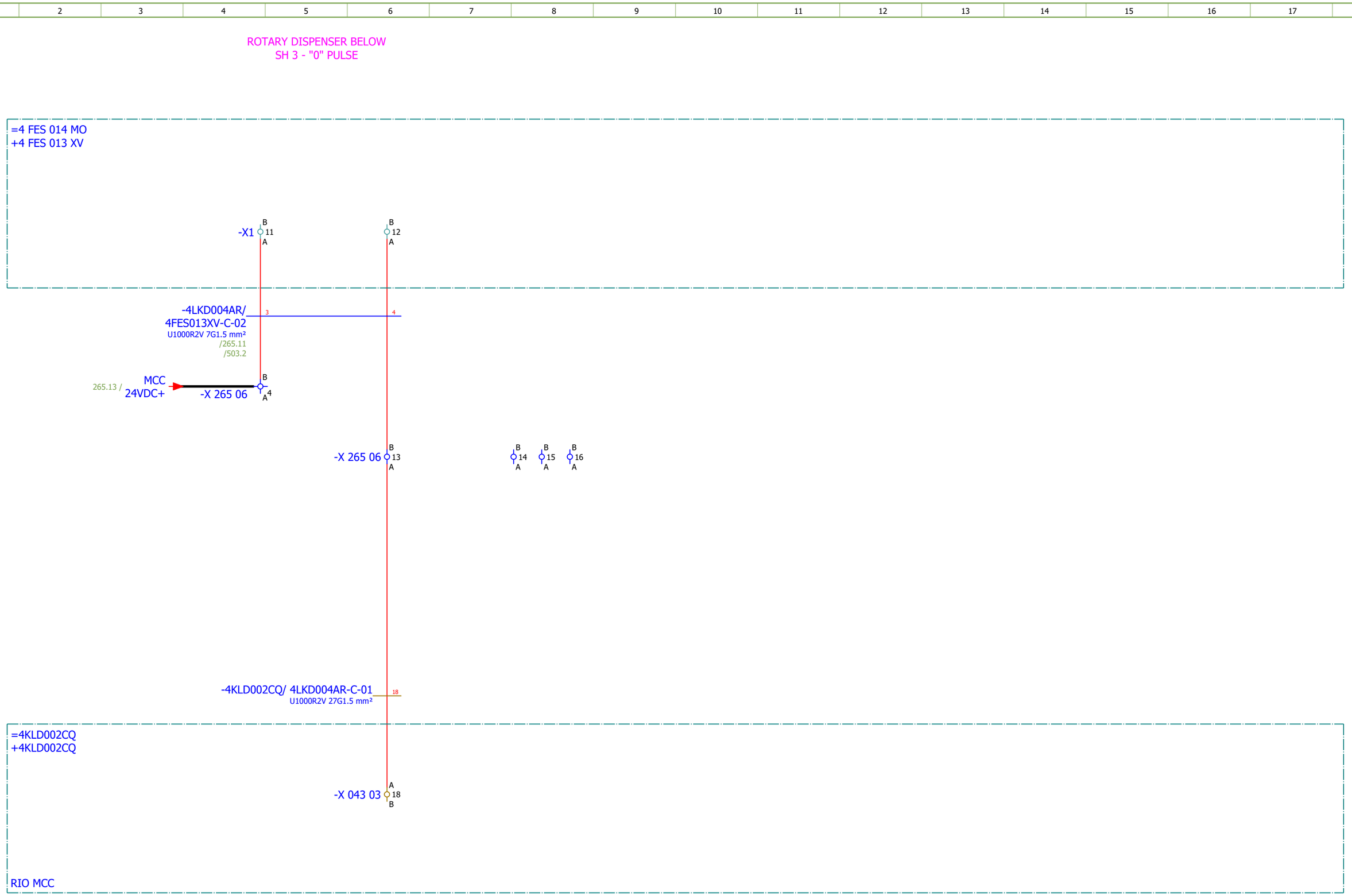

Date:	17.03.2026.	SINTAKSA A Voith Company	Client:	ANDRITZ TEP d.o.o. Ulica 108. brigade ZNG 84, 35000 Slavonski Brod, Croatia	Scope: BOILER/LOW VOLTAGE CABINET BOILER (NORMAL) 4	Project: BRC-4	Unit & Issuer: ATEP0	Number: 1874	Revision: G
Drawn:	Luka Božičević								#D
Approved:	Grga Kolić		Object:	RDF Albioma Les Bois Rouge Reunion - France	Content: ROTARY DISPENSER BELOW SH 3 - SIGNALIZATION	Drawing designation: BRC-4-ATEP0-1874-G		=4LKD001AR	Sheet: 266
Format:	A3							+4LKD004AR	Next: 267

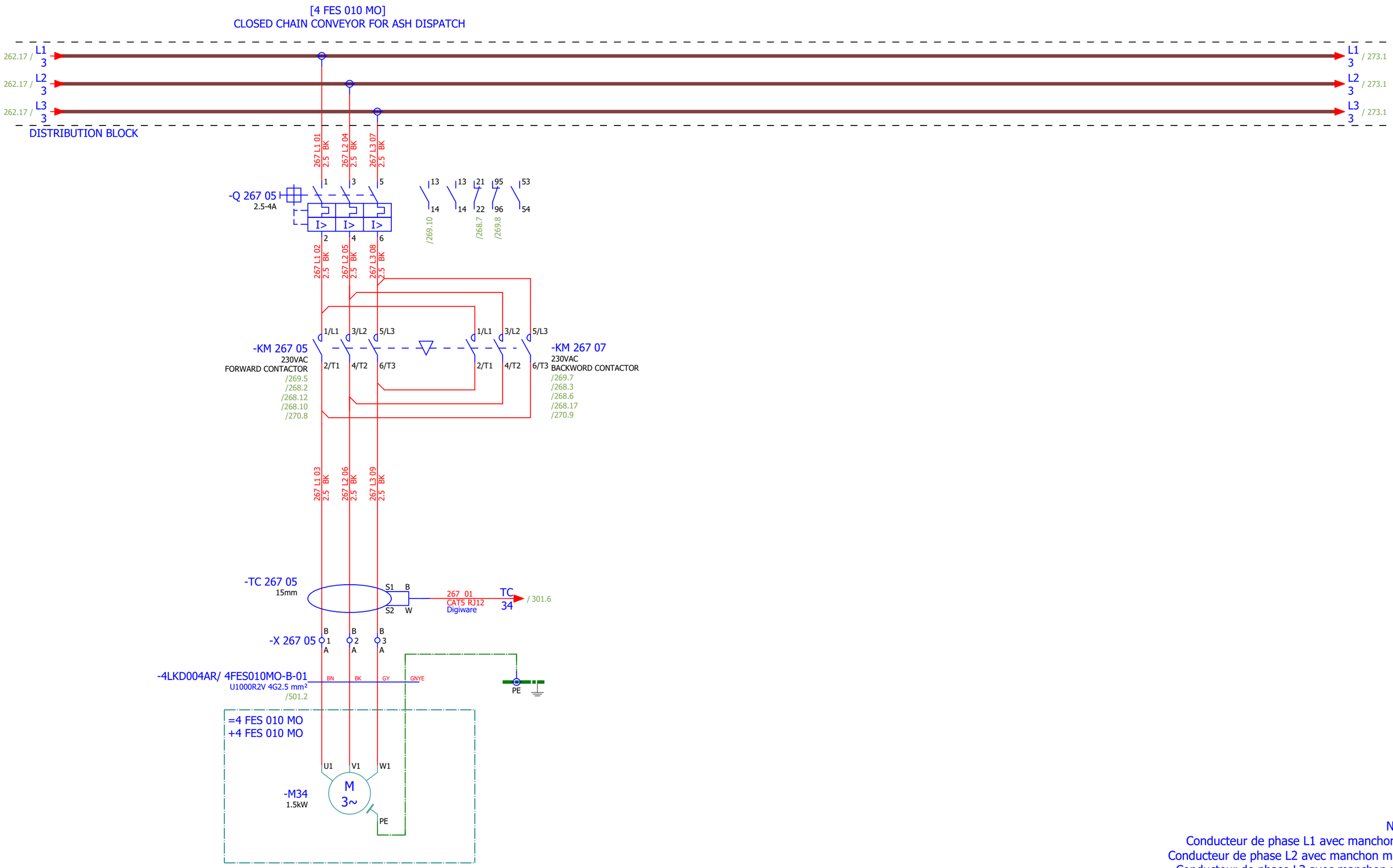

NOTE:
Conducteur de phase L1 avec manchon noir
Conducteur de phase L2 avec manchon marron
Conducteur de phase L3 avec manchon rouge

Date:	17.03.2026.	SINTAKSA A Voith Company	Client:	ANDRITZ TEP d.o.o. Ulica 108. brigade ZNG 84, 35000 Slavonski Brod, Croatia	Scope: BOILER/LOW VOLTAGE CABINET BOILER (NORMAL) 4	Project: BRC-4	Unit & Issuer: ATEP0	Number: 1874	Revision: G
Drawn:	Luka Božičević								#D
Approved:	Grga Kolić		Object:	RDF Albioma Les Bois Rouge Reunion - France	Content: CLOSED CHAIN CONVEYOR FOR ASH DISPATCH	Drawing designation: BRC-4-ATEP0-1874-G			=4LKD001AR
Format:	A3								+4LKD004AR

Sheet: 267
Next: 268

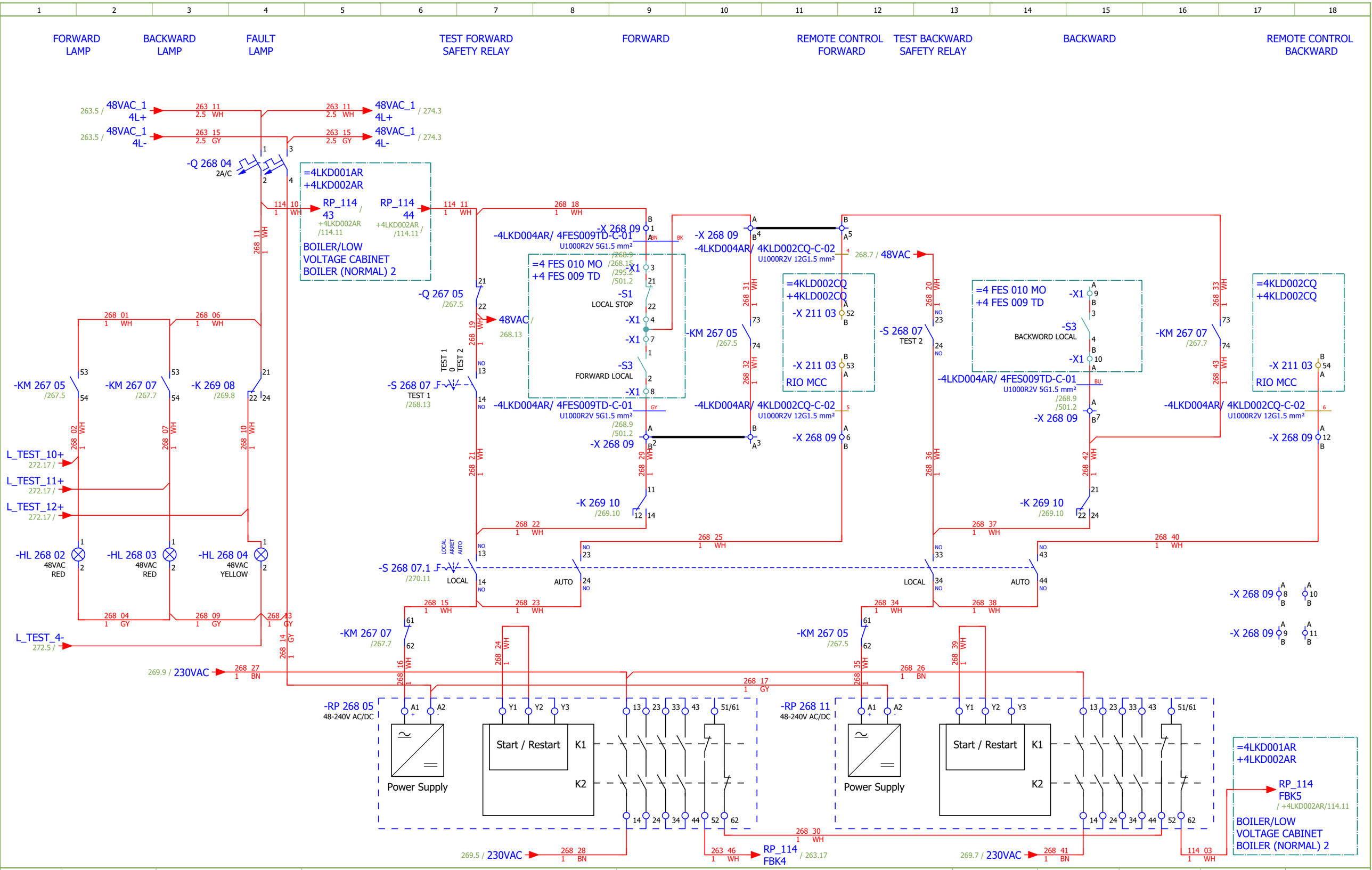

Date:	17.03.2026.	SINTAKSA A Voith Company	Client: ANDRITZ TEP d.o.o. Ulica 108. brigade ZNG 84, 35000 Slavonski Brod, Croatia	Scope: BOILER/LOW VOLTAGE CABINET BOILER (NORMAL) 4	Project: BRC-4	Unit & Issuer: ATEP0	Number: 1874	Revision: G	
Drawn:	Luka Božičević								#D
Approved:	Grga Kolić		Object: RDF Albioma Les Bois Rouge Reunion - France	Content: CLOSED CHAIN CONVEYOR FOR ASH DISPATCH - CONTROL	Drawing designation: BRC-4-ATEP0-1874-G			=4LKD001AR	Sheet: 268
Format:	A3							+4LKD004AR	Next: 269

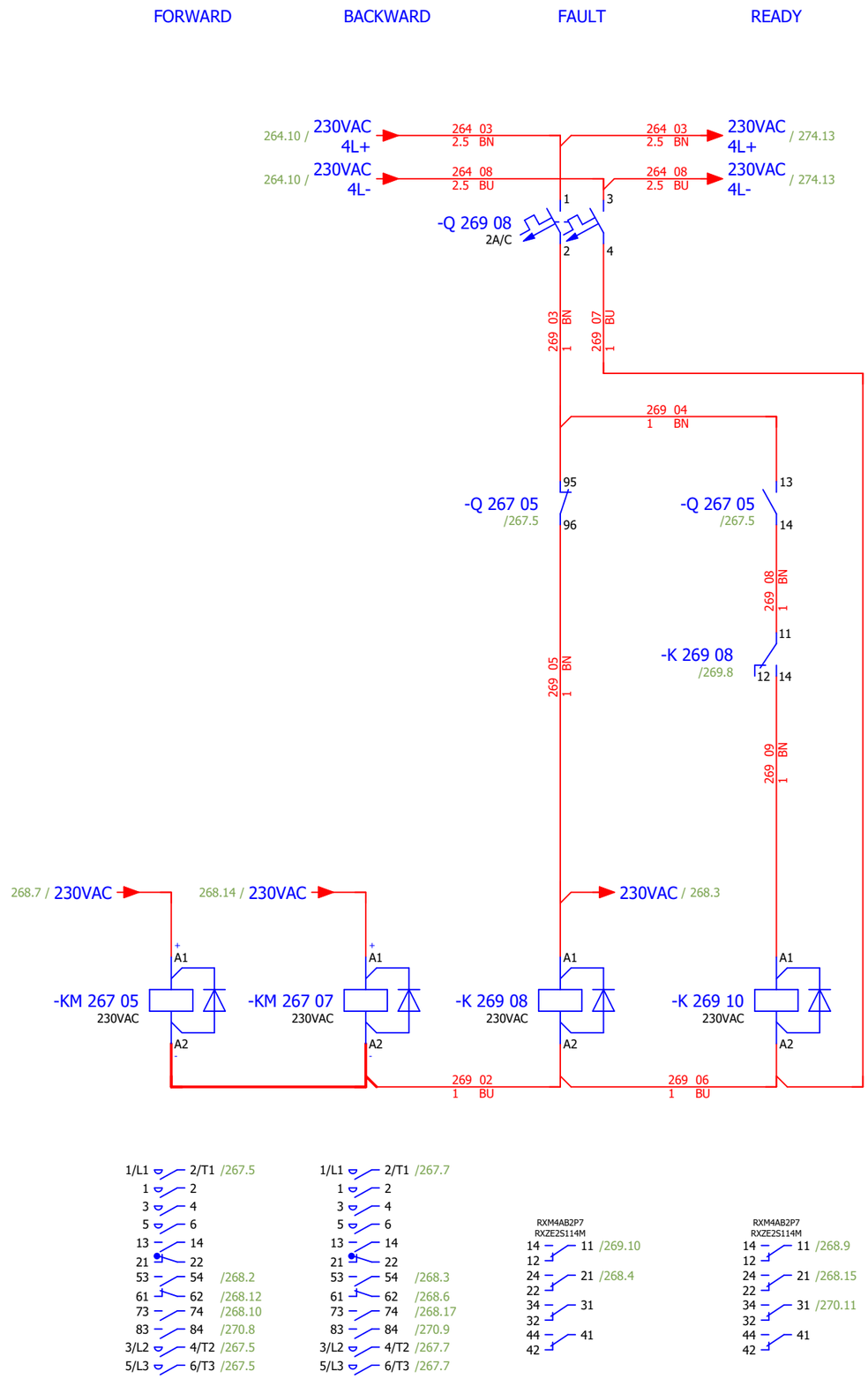

Date:	17.03.2026.	SINTAKSA A Voith Company	Client:	ANDRITZ TEP d.o.o. Ulica 108. brigade ZNG 84, 35000 Slavonski Brod, Croatia	Scope:	BOILER/LOW VOLTAGE CABINET BOILER (NORMAL) 4	Project: BRC-4	Unit & Issuer: ATEP0	Number: 1874	Revision: G	#D
Drawn:	Luka Božičević										
Approved:	Grga Kolić		Object:	RDF Albioma Les Bois Rouge Reunion - France	Content:	CLOSED CHAIN CONVEYOR FOR ASH DISPATCH - CONTROL	Drawing designation: BRC-4-ATEP0-1874-G			=4LKD001AR	Sheet: 269
Format:	A3									+4LKD004AR	Next: 270

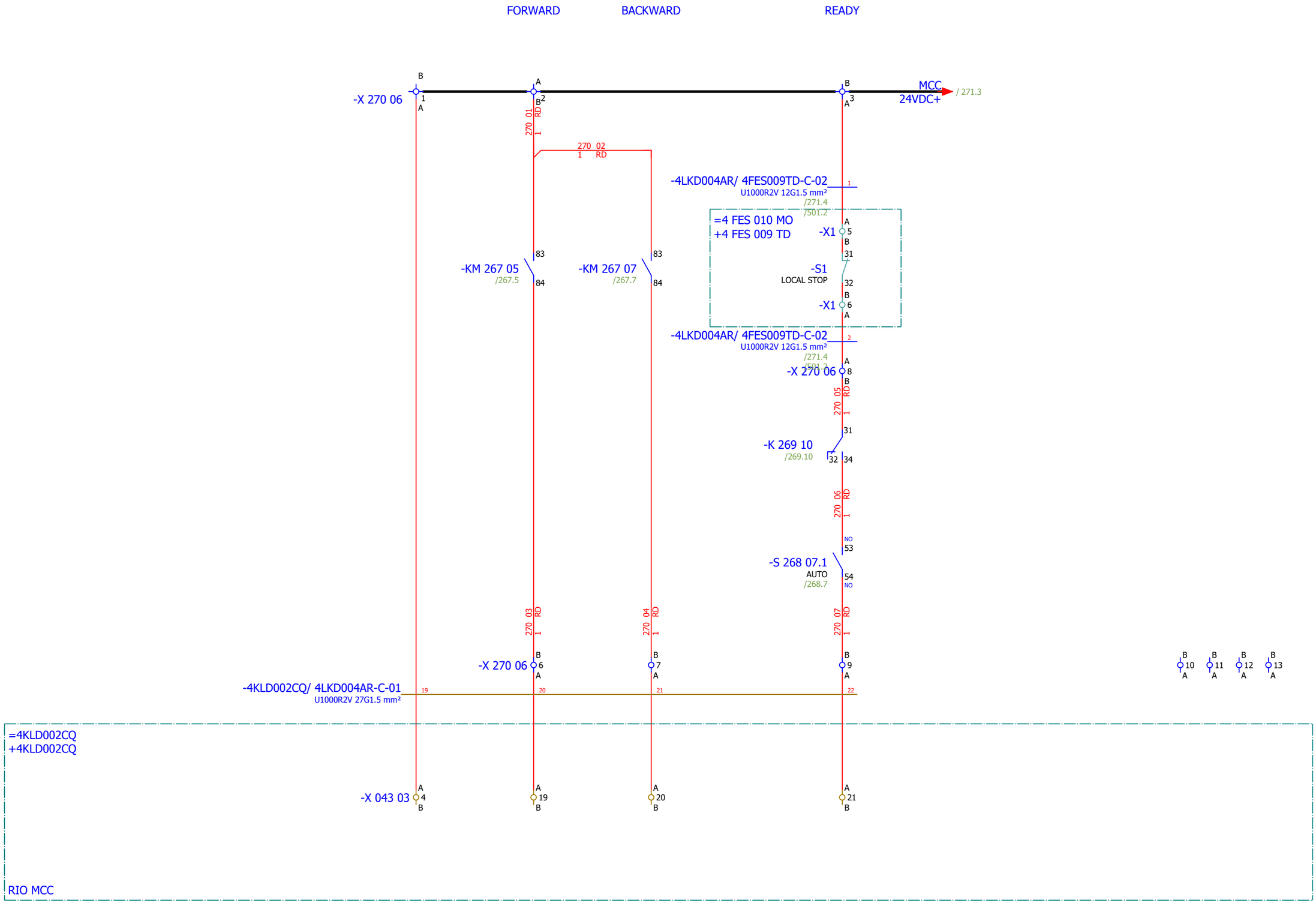

Date:	17.03.2026.	SINTAKSA A Voith Company	Client:	ANDRITZ TEP d.o.o. Ulica 108. brigade ZNG 84, 35000 Slavonski Brod, Croatia	Scope:	BOILER/LOW VOLTAGE CABINET BOILER (NORMAL) 4	Project: BRC-4	Unit & Issuer: ATEP0	Number: 1874	Revision: G
Drawn:	Luka Božičević									#D
Approved:	Grga Kolić		Object:	RDF Albioma Les Bois Rouge Reunion - France	Content:	CLOSED CHAIN CONVEYOR FOR ASH DISPATCH - SIGNALIZATION	Drawing designation: BRC-4-ATEP0-1874-G		=4LKD001AR	Sheet: 270
Format:	A3								+4LKD004AR	Next: 271

CLOSED CHAIN CONVEYOR
FOR ASH DISPATCH - "0"
PULSE

CONVOYEUR À CHAINE
VERS ÉVACUATION DES
CENDRES SOUS CHAUDIÈRE
- BLOCKAGE DETECTION

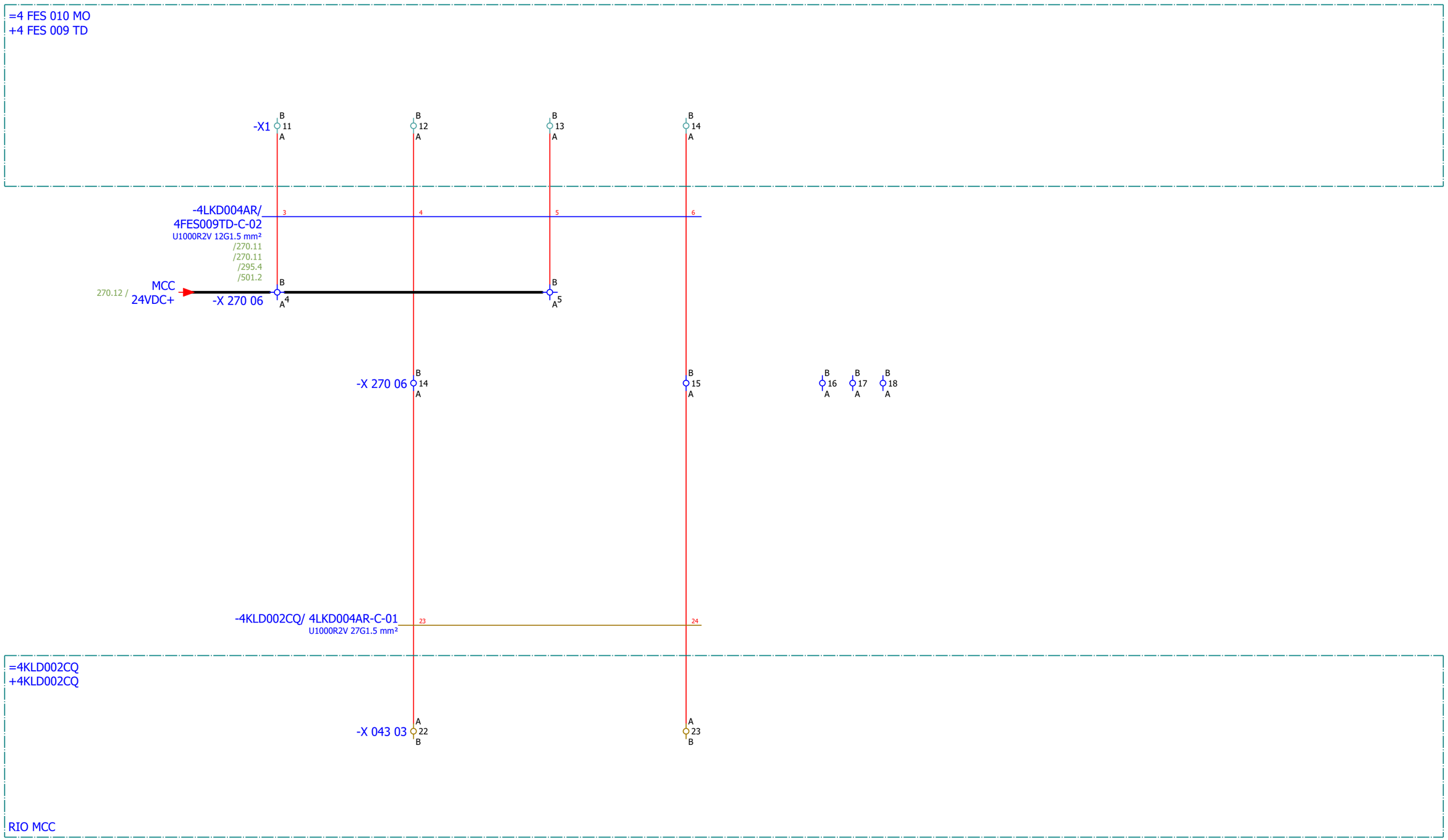

Date:	17.03.2026.	SINTAKSA A Voith Company	Client:	ANDRITZ TEP d.o.o. Ulica 108. brigade ZNG 84, 35000 Slavonski Brod, Croatia	Scope: BOILER/LOW VOLTAGE CABINET BOILER (NORMAL) 4	Project: BRC-4	Unit & Issuer: ATEP0	Number: 1874	Revision: G
Drawn:	Luka Božičević								#D
Approved:	Grga Kolić		Object:	RDF Albioma Les Bois Rouge Reunion - France	Content: CLOSED CHAIN CONVEYOR FOR ASH DISPATCH - SIGNALIZATION	Drawing designation: BRC-4-ATEP0-1874-G		=4LKD001AR	Sheet: 271
Format:	A3							+4LKD004AR	Next: 272

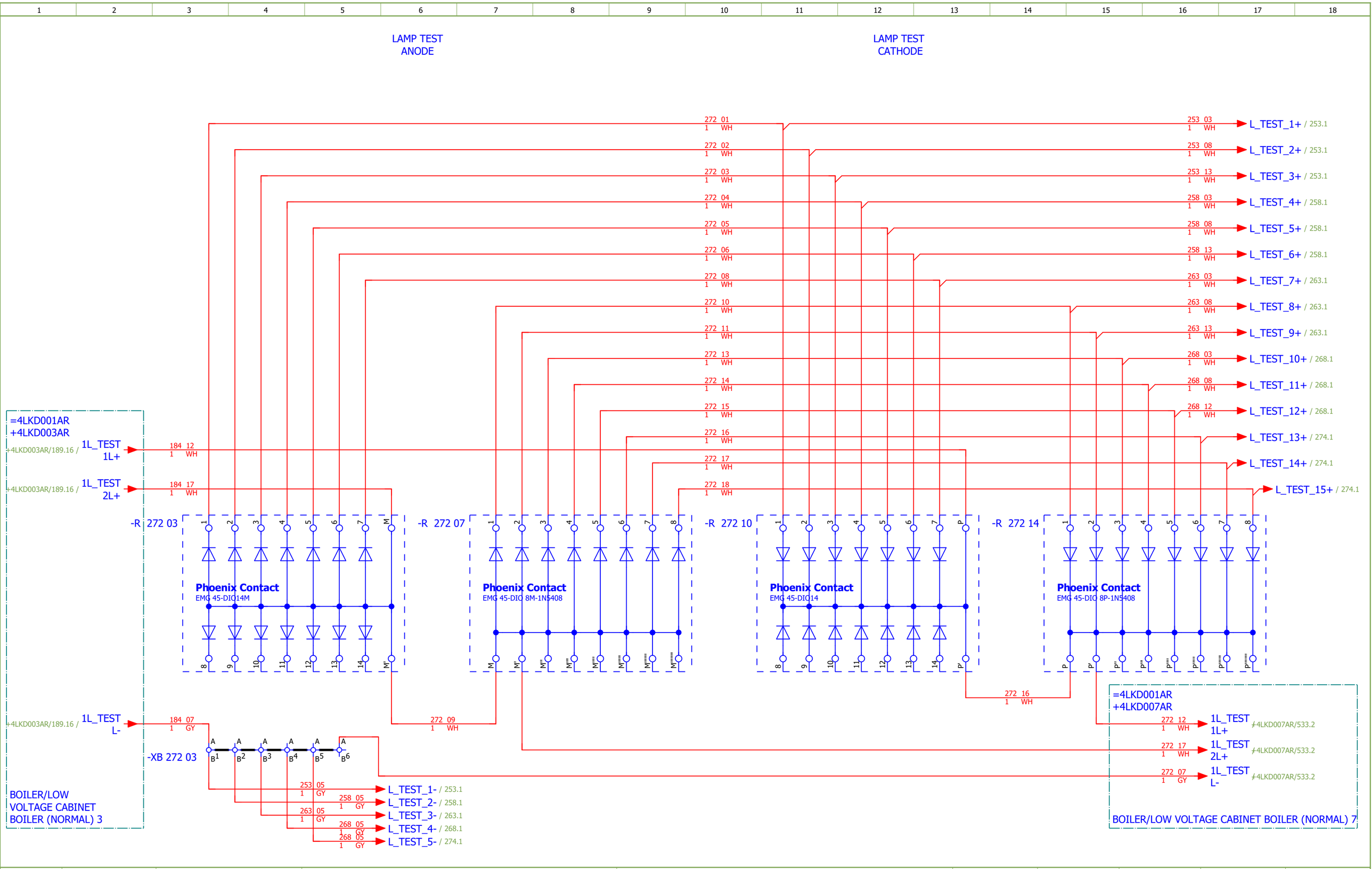

Date:	17.03.2026.	SINTAKSA A Voith Company	Client: ANDRITZ TEP d.o.o. Ulica 108. brigade ZNG 84, 35000 Slavonski Brod, Croatia	Scope: BOILER/LOW VOLTAGE CABINET BOILER (NORMAL) 4	Project: BRC-4	Unit & Issuer: ATEP0	Number: 1874	Revision: G	
Drawn:	Luka Božičević								#D
Approved:	Grga Kolić		Object: RDF Albioma Les Bois Rouge Reunion - France	Content: LAMP TEST	Drawing designation: BRC-4-ATEP0-1874-G			=4LKD001AR	Sheet: 272
Format:	A3							+4LKD004AR	Next: 273

[4SAR902MO]
FURNACE REFRACTORY COOLING FANS 1

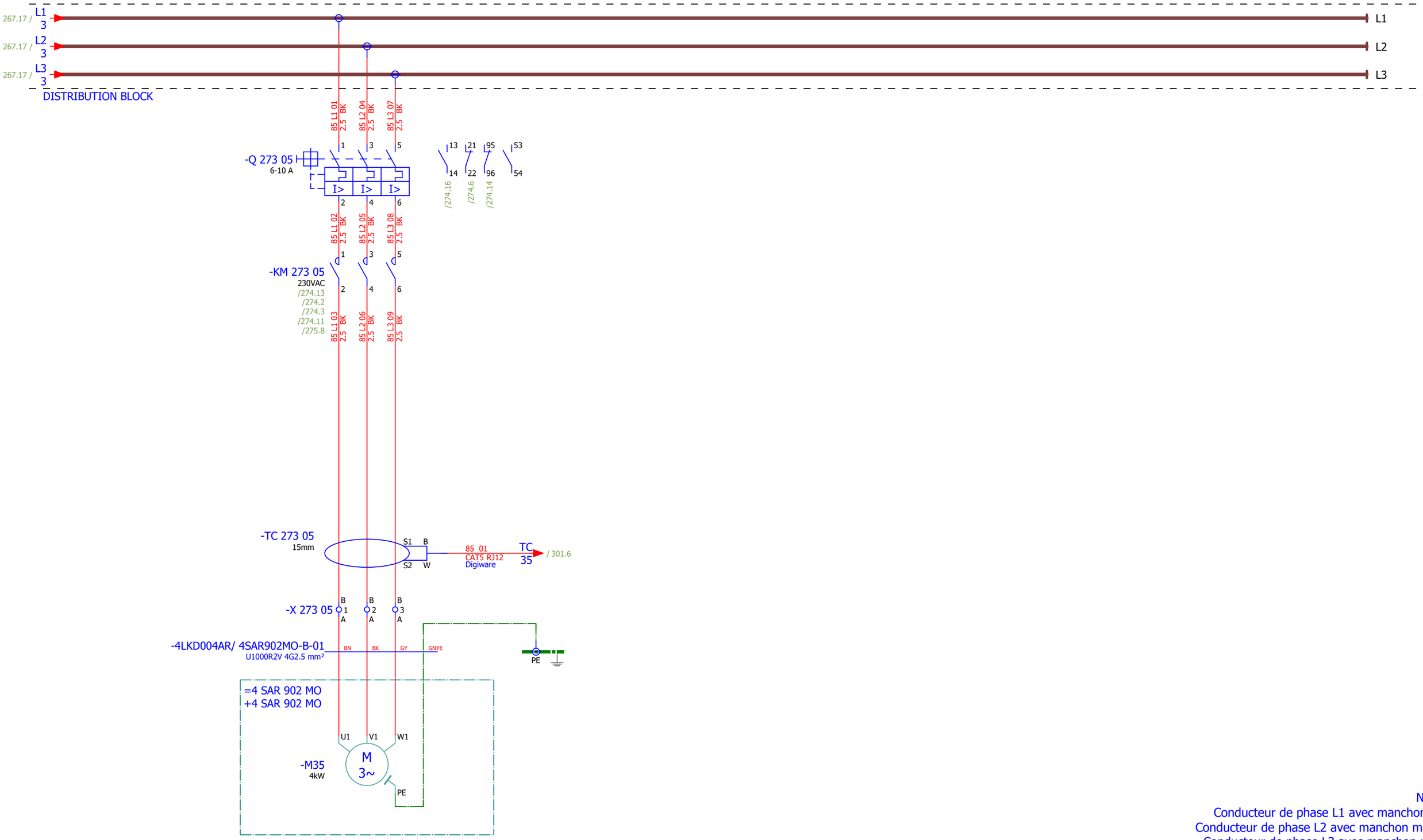

NOTE:
Conducteur de phase L1 avec manchon noir
Conducteur de phase L2 avec manchon marron
Conducteur de phase L3 avec manchon rouge

Date:	17.03.2026.	SINTAKSA A Voith Company	Client:	ANDRITZ TEP d.o.o. Ulica 108. brigade ZNG 84, 35000 Slavonski Brod, Croatia	Scope: BOILER/LOW VOLTAGE CABINET BOILER (NORMAL) 4	Project: BRC-4	Unit & Issuer: ATEP0	Number: 1870	Revision: F
Drawn:	Luka Božičević								#D
Approved:	Grga Kolić		Object:	RDF Albioma Les Bois Rouge Reunion - France	Content: FURNACE REFRACTORY COOLING FANS 1	Drawing designation: BRC-4-ATEP0-1870-F		=4LKD001AR	Sheet: 273
Format:	A3							+4LKD004AR	Next: 274

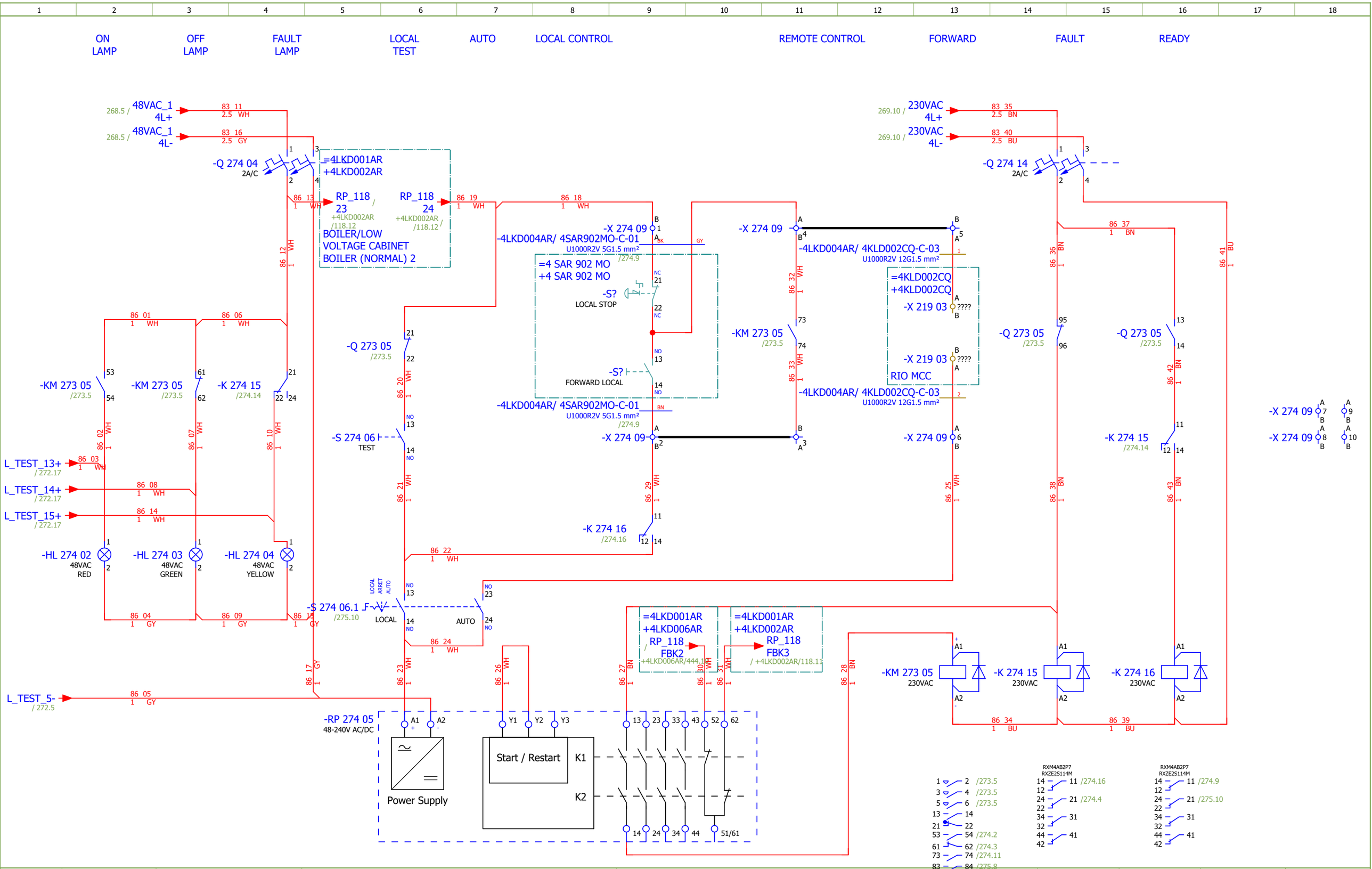

Date:	17.03.2026.	SINTAKSA A Voith Company	Client:	ANDRITZ TEP d.o.o. Ulica 108. brigade ZNG 84, 35000 Slavonski Brod, Croatia	Scope:	BOILER/LOW VOLTAGE CABINET BOILER (NORMAL) 4	Project: BRC-4	Unit & Issuer: ATEP0	Number: 1870	Revision: F
Drawn:	Luka Božičević									#D
Approved:	Grga Kolić		Object:	RDF Albioma Les Bois Rouge Reunion - France	Content:	FURNACE REFRACTORY COOLING FANS 1 - CONTROL	Drawing designation: BRC-4-ATEP0-1870-F		=4LKD001AR	Sheet: 274
Format:	A3								+4LKD004AR	Next: 275

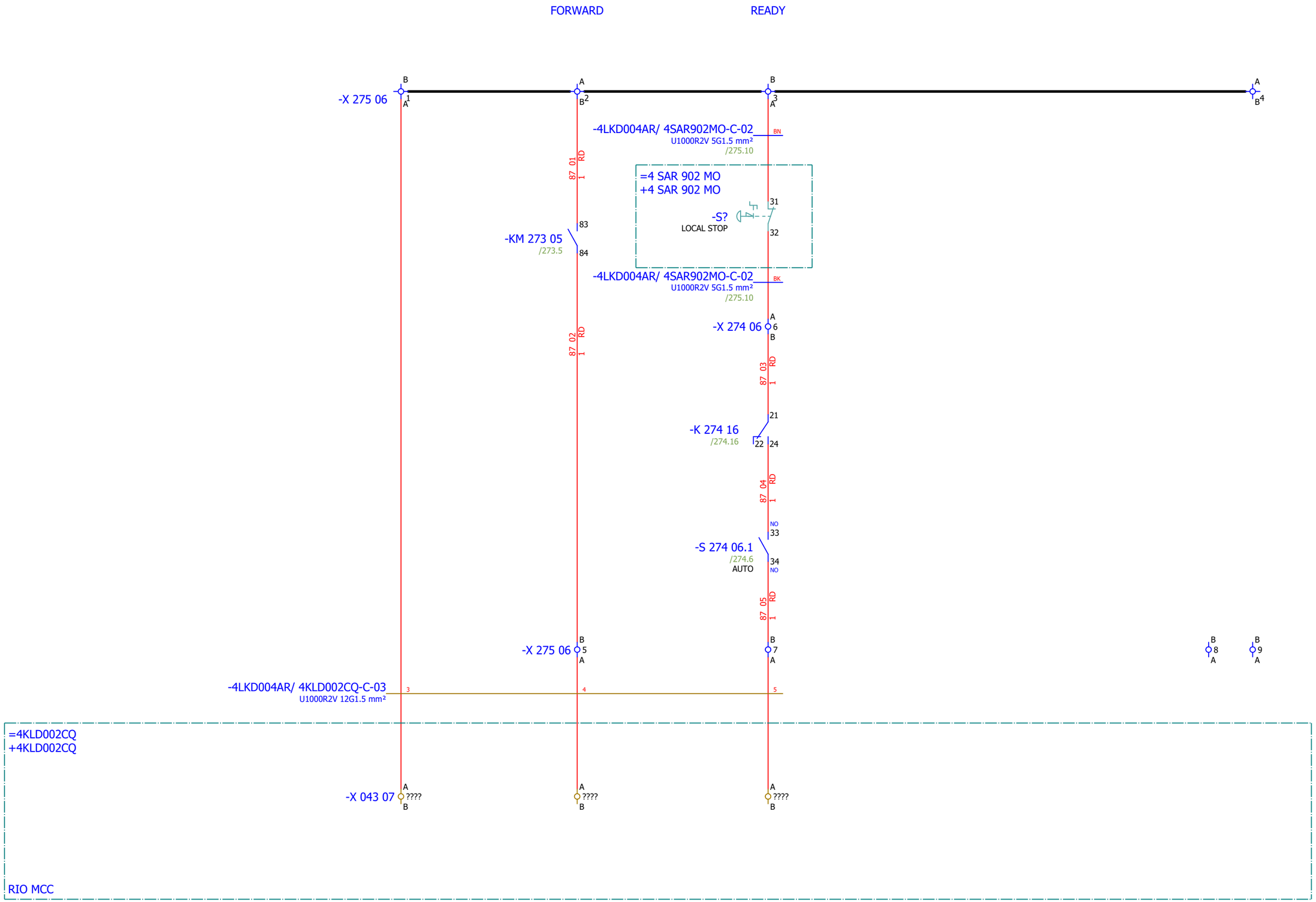

Date:	17.03.2026.	SINTAKSA A Voith Company	Client:	ANDRITZ TEP d.o.o. Ulica 108. brigade ZNG 84, 35000 Slavonski Brod, Croatia	Scope: BOILER/LOW VOLTAGE CABINET BOILER (NORMAL) 4	Project: BRC-4	Unit & Issuer: ATEP0	Number: 1870	Revision: F
Drawn:	Luka Božičević								#D
Approved:	Grga Kolić		Object:	RDF Albioma Les Bois Rouge Reunion - France	Content: FURNACE REFRACTORY COOLING FANS 1 - SIGNALIZATION	Drawing designation: BRC-4-ATEP0-1870-F		=4LKD001AR	Sheet: 275
Format:	A3							+4LKD004AR	Next: 291

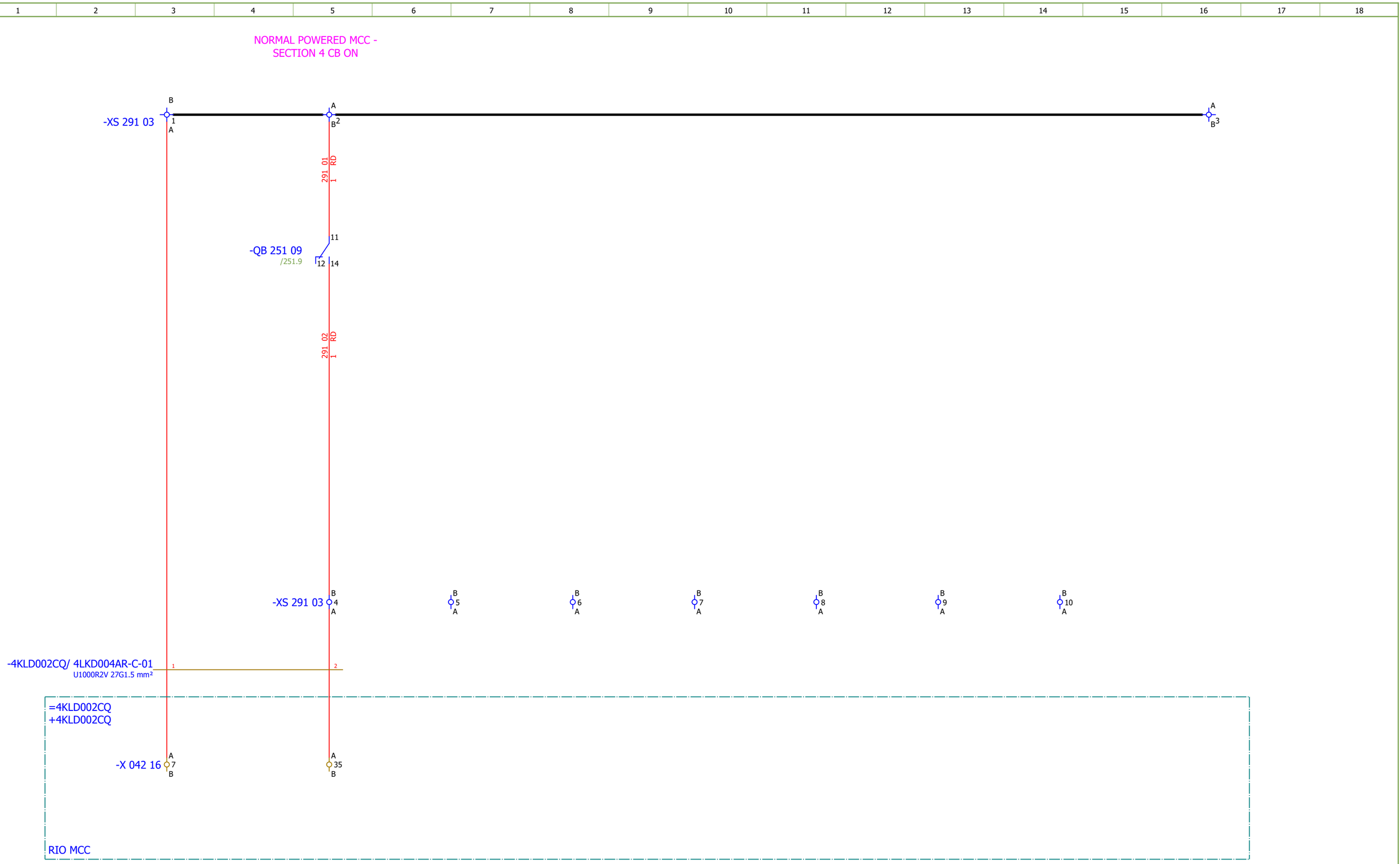

Date:	17.03.2026.	SINTAKSA A Voith Company	Client:	ANDRITZ TEP d.o.o. Ulica 108. brigade ZNG 84, 35000 Slavonski Brod, Croatia	Scope: BOILER/LOW VOLTAGE CABINET BOILER (NORMAL) 4	Project: BRC-4	Unit & Issuer: ATEP0	Number: 1874	Revision: G
Drawn:	Luka Božičević								#QA
Approved:	Grga Kolić		Object:	RDF Albioma Les Bois Rouge Reunion - France	Content: SIGNALIZATION	Drawing designation: BRC-4-ATEP0-1874-G			=4LKD001AR
Format:	A3								+4LKD004AR

Sheet: 291
Next: 295

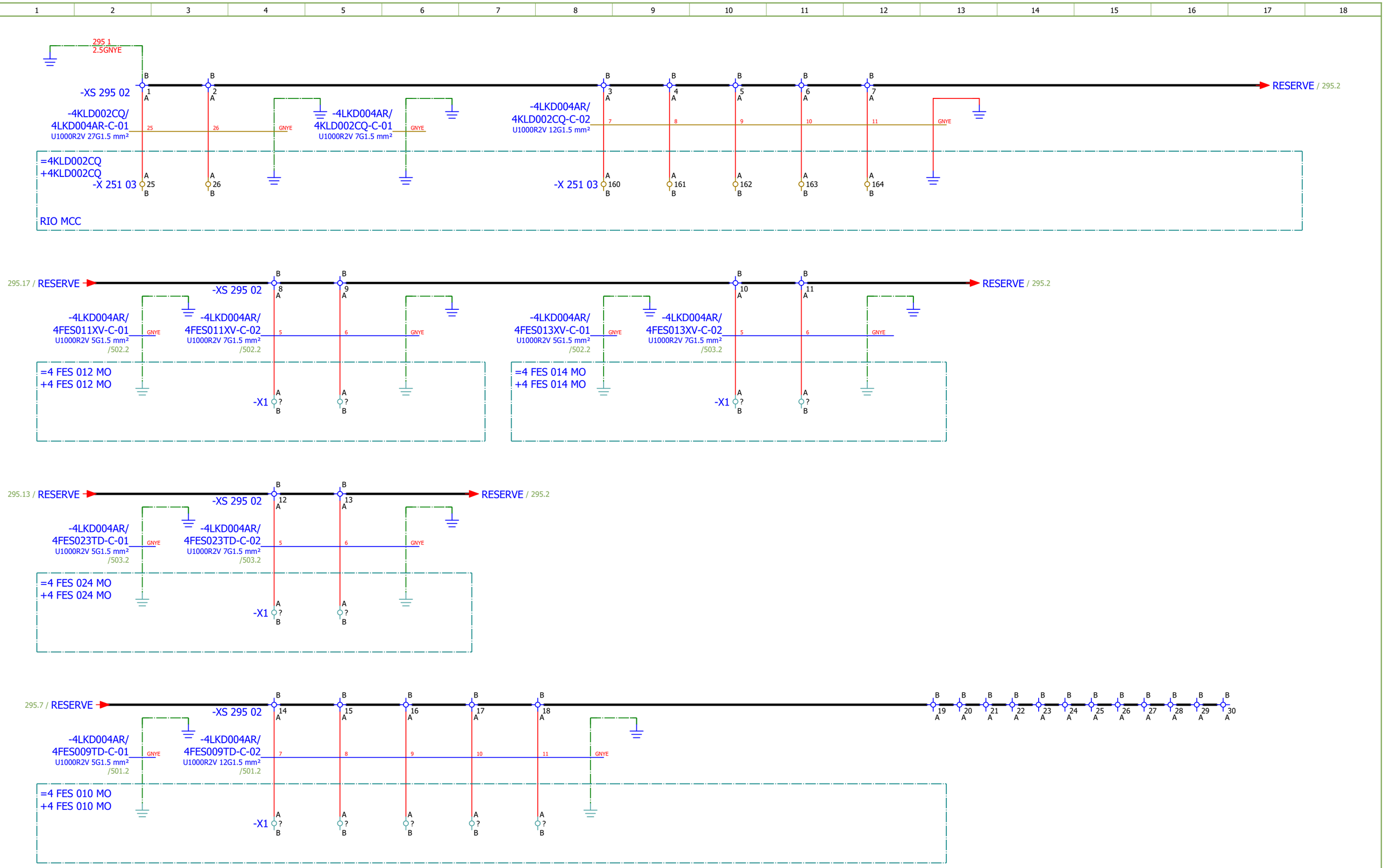

Date:	17.03.2026.	SINTAKSA A Voith Company	Client: ANDRITZ TEP d.o.o. Ulica 108. brigade ZNG 84, 35000 Slavonski Brod, Croatia	Scope: BOILER/LOW VOLTAGE CABINET BOILER (NORMAL) 4	Project: BRC-4	Unit & Issuer: ATEP0	Number: 1874	Revision: G	
Drawn:	Luka Božičević								#QB
Approved:	Grga Kolić		Object: RDF Albioma Les Bois Rouge Reunion - France	Content: SPARE	Drawing designation: BRC-4-ATEP0-1874-G			=4LKD001AR	Sheet: 295
Format:	A3							+4LKD004AR	Next: 301

MEASUREMENT

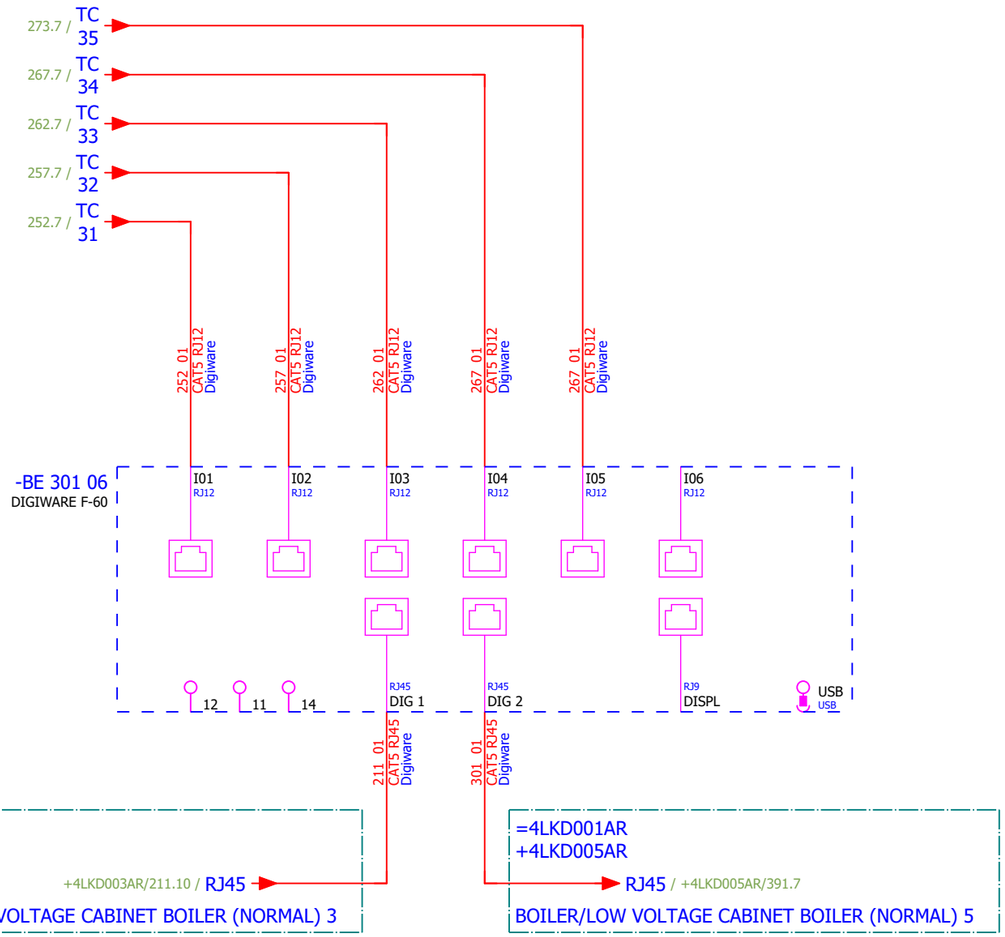

Date:	17.03.2026.	SINTAKSA A Voith Company	Client:	ANDRITZ TEP d.o.o. Ulica 108. brigade ZNG 84, 35000 Slavonski Brod, Croatia	Scope: BOILER/LOW VOLTAGE CABINET BOILER (NORMAL) 4	Project: BRC-4	Unit & Issuer: ATEP0	Number: 1874	Revision: G
Drawn:	Luka Božičević								#V
Approved:	Grga Kolić		Object:	RDF Albioma Les Bois Rouge Reunion - France	Content: COMMUNICATION	Drawing designation: BRC-4-ATEP0-1874-G			=4LKD001AR
Format:	A3								+4LKD004AR

Sheet: 301
Next: 401

Sorting number	Part number	Quantity	Manufacturer	Device	Device description	Device designation
1.	SOC.47290126	1	Socomec	Module location default ISOM DIGIWARE F-60	Network type - Power distribution, Control circuits, Medical Rated voltage - 24 VDC Type - Insulation Fault Locator Indication - Digital	-BE 301 06
2.	SE.ZB4BVBG1	12	Schneider Electric	white light block with body/fixing collar integral LED 24...120VAC/DC		-HL 253 02...-HL 253 04;-HL 258 02...-HL 258 04;-HL 263 02...-HL 263 04;-HL 268 02...-HL 268 04
3.	SE.ZB4BV043	8	Schneider Electric	Red pilot light head Ø22 plain lens for integral LED	Complete body light block assembly, Harmony XB4, metal, universal LED, body fixing collar, 24...120V AC DC Head for pilot light: Red	-HL 253 02;-HL 253 03;-HL 258 02;-HL 258 03;-HL 26 3 02;-HL 263 03;-HL 268 02;-HL 268 03
4.	SE.ZBZ32	12	Schneider Electric	Harmony XB4	Legend holder, plastic	-HL 253 02...-HL 253 04;-HL 258 02...-HL 258 04;-HL 263 02...-HL 263 04;-HL 268 02...-HL 268 04
5.	SE.ZB4BV053	4	Schneider Electric	Orange pilot light head Ø22 plain lens for integral LED	Complete body light block assembly, Harmony XB4, metal, universal LED, body fixing collar, 24...120V AC DC Head for pilot light: Orange	-HL 253 04;-HL 258 04;-HL 263 04;-HL 268 04
6.	SE.RXM4AB2P7	8	Schneider Electric	Miniature Plug-in relay - Zelio RXM 4 C/O 230 V AC 6 A with LED	Miniature Plug-in relay - Zelio RXM 4 C/O 230 V AC 6 A with LED	-K 254 08;-K 254 10;-K 259 08;-K 259 10;-K 264 08;-K 264 10;-K 269 08;-K 269 10
7.	SE.RXZE2S114M	8	Schneider Electric	Socket	For RXM2/RXM4 relays Screw connectors Separate contact 4 C/O	-K 254 08;-K 254 10;-K 259 08;-K 259 10;-K 264 08;-K 264 10;-K 269 08;-K 269 10
8.	SE.RXM041FU7	8	Schneider Electric	Protection module	RC circuit - 110..240 V AC - for RPZ/RXZ sockets	-K 254 08;-K 254 10;-K 259 08;-K 259 10;-K 264 08;-K 264 10;-K 269 08;-K 269 10
9.	SE.LC1D12P7	8	Schneider Electric	Contactor TeSys LC1-D - 3P - AC-3 440V 12 A, Coil 230 V AC	Contactor TeSys LC1-D - 3P - AC-3 440V 18 A, Coil 230 V AC	-KM 252 05;-KM 252 07;-KM 257 05;-KM 257 07;-KM 2 62 05;-KM 262 07;-KM 267 05;-KM 267 07
10.	SE.LADN31	8	Schneider Electric	Auxiliary contact block TeSys - 3 NO + 1 NC,screw-clamps terminals	Auxiliary contact block TeSys - 3 NO + 1 NC,screw-clamps terminals	-KM 252 05;-KM 252 07;-KM 257 05;-KM 257 07;-KM 2 62 05;-KM 262 07;-KM 267 05;-KM 267 07
11.	SE.LAD4RCU	8	Schneider Electric	RC Transient Suppressor 110 TO 250 VAC	RC Transient Suppressor 110 TO 250 VAC	-KM 252 05;-KM 252 07;-KM 257 05;-KM 257 07;-KM 2 62 05;-KM 262 07;-KM 267 05;-KM 267 07
12.	SE.LAD9R1V	4	Schneider Electric	Reversing mechanical interlock kit	Tesys D, reversing mechanical interlock kit, with electrical interlocking, for LC1D09 to LC1D38	-KM 252 05;-KM 257 05;-KM 262 05;-KM 267 05
13.	SE.GV2P16	1	Schneider Electric	Thermal Magnetic Motor Circuit Breaker TeSys GV2P - 3P - 9...14 A	Thermal Magnetic Motor Circuit Breaker TeSys GV2P - 3P - 9...14 A	-Q 252 05
14.	SE.GVAE11	4	Schneider Electric	Auxiliary contact block	1NO+1NC Front mounting For GV2	-Q 252 05;-Q 257 05;-Q 262 05;-Q 267 05
15.	SE.GVAD0110	4	Schneider Electric	TeSys GV AD0110 - auxiliary contact - 1 NO + 1 NC (fault)		-Q 252 05;-Q 257 05;-Q 262 05;-Q 267 05
16.	SE.A9F74202	8	Schneider Electric	2-pole MCB, 2A/C	Nominal current: 2 A Tripping curve: C	-Q 253 04;-Q 254 08;-Q 258 04;-Q 259 08;-Q 263 04;-Q 264 08;-Q 268 04;-Q 269 08
17.	SE.GV2P14	2	Schneider Electric	Motor circuit breaker	3-pole 6-10 A Thermal-magnetic	-Q 257 05;-Q 262 05
18.	SE.GV2P08	1	Schneider Electric	3-pole transformator protection circuit breaker		-Q 267 05
19.	SE.C10F3TM032	1	Schneider Electric	Circuit breaker, ComPacT NSX100B	36kA/415VAC 3 poles TMD trip unit 32A	-QB 251 09
20.	SE.29450	1	Schneider Electric	Auxiliary contact 1 OF or 1 SD or 1 SDE or 1 SDV	Auxiliary contact 1 OF or 1 SD or 1 SDE or 1 SDV	-QB 251 09
21.	SE.LV429337T	1	Schneider Electric	Direct rotary handle, ComPacT NSX 100/160/250, black handle, IP40	Direct rotary handle, ComPacT NSX 100/160/250, black handle, IP40	-QB 251 09
22.	SE.LVS04033	1	Schneider Electric	LINERGY DP	LINERGY DP 3P D.BLK/COMPACT 250A 27HOLES	-QB 251 09

Sorting number	Part number	Quantity	Manufacturer	Device	Device description	Device designation
23.	SE.LV429517	1	Schneider Electric	Insulation accessories 1 long terminal shield for breaker or plug-in base, 3P - NSX100...250	Insulation accessories 1 long terminal shield for breaker or plug-in base, 3P - NSX100...250	-QB 251 09
24.	PXC.2950129	1	Phoenix Contact	Component for protective circuit	Diode module, with 14 diodes, common anode, diode type 1N 4007	-R 272 03
25.	PXC.2954882	1	Phoenix Contact	Diode block	Diode module, with eight diodes, common anode, diode type 1N 5408	-R 272 07
26.	PXC.2950116	1	Phoenix Contact	Component for protective circuit	Diode module, with 14 diodes, common cathode, diode type 1N 4007	-R 272 10
27.	PXC.2954879	1	Phoenix Contact	Component for protective circuit	Diode module, with eight diodes, common cathode, diode type 1N 5408	-R 272 14
28.	SE.XPSBAC34AP	8	Schneider Electric	Safety module	Harmony Safety Automation Estop or guard ,Harmony XPS, connected to supply terminals 48-240 V AC/DC , no inputs, screw	-RP 253 05;-RP 253 11;-RP 258 06;-RP 258 12;-RP 263 06;-RP 263 12;-RP 268 05;-RP 268 11
29.	SE.XB4BD33	8	Schneider Electric	Selector switch, BLACK, 1-0-2, 2NO	Metal Black Ø22 3 positions 2 NO	-S 253 07;-S 253 07.1;-S 258 07;-S 258 07.1;-S 263 07;-S 263 07.1;-S 268 07;-S 268 07.1
30.	SE.ZBE101	12	Schneider Electric	Single contact block NO	Harmony XB4 Silver alloy 1 NO	-S 253 07.1;-S 258 07.1;-S 263 07.1;-S 268 07.1
31.	SOC.47506015	4	Socomec	TORES LOCATION SENSOR DELTA IP-15 (15mm)	Maximal diameter of cable: 15mm	-TC 252 05;-TC 257 05;-TC 262 05;-TC 267 05
32.	SOC.47290590	4	Socomec	ISOM T-15	Connection adaptor ISOM T-15 to ISOM Digiware F-60 modules	-TC 252 05;-TC 257 05;-TC 262 05;-TC 267 05
33.	PXC.3209510	175	Phoenix Contact	PT 2,5 - Feed-through terminal block	Feed-through terminal block, nom. voltage: 800 V, nominal current: 24 A, number of connections: 2, number of positions: 1, connection method: Push-in connection, Rated cross section: 2.5 mm2, cross section: 0.14 mm2 - 4 mm2, mounting type: NS 35/7,5, NS 35/15, color: gray	-X 252 05;-X 253 09;-X 255 06;-X 257 05;-X 258 09;-X 260 06;-X 262 05;-X 263 09;-X 265 06;-X 267 05;-X 268 09;-X 270 06;-XB 272 03;-XS 291 03;-XS 295 02

1	2	3	4	5	6	7	8	9	10	11	12	13	14	15	16	17	18

Cable name: **4LKD004AR/ 4FES009TD-C-01**

Cable type: **U1000R2V** No. of conn., diameter, length: **5G1.5 mm² /**

Remark:

Function text	Page / Column	FROM	Terminal	Conductor	TO	Terminal	Page / Column	Function text
FORWARD	=4LKD001AR+4LKD004AR/268.9	=4LKD001AR+4LKD004AR-X 268 09	1:A	**BN**	=4 FES 010 MO+4 FES 009 TD-X1	3	=4LKD001AR+4LKD004AR/268.9	FORWARD
=	=4LKD001AR+4LKD004AR/268.9			**BK**	=4LKD001AR+4LKD004AR-X 268 09	4:A	=4LKD001AR+4LKD004AR/268.10	=
=	=4LKD001AR+4LKD004AR/268.9	=4LKD001AR+4LKD004AR-X 268 09	2:A	**GY**	=4 FES 010 MO+4 FES 009 TD-X1	8	=4LKD001AR+4LKD004AR/268.9	=
BACKWARD	=4LKD001AR+4LKD004AR/268.15	=4LKD001AR+4LKD004AR-X 268 09	7:A	**BU**	=4 FES 010 MO+4 FES 009 TD-X1	10:A	=4LKD001AR+4LKD004AR/268.15	BACKWARD
	=4LKD001AR+4LKD004AR/295.3	=4LKD001AR+4LKD004AR-PE		**GNYE**	=4 FES 010 MO+4 FES 010 MO-PE		=4LKD001AR+4LKD004AR/295.2	

Cable name: **4LKD004AR/ 4FES009TD-C-02**

Cable type: **U1000R2V** No. of conn., diameter, length: **12G1.5 mm² /**

Remark:

Function text	Page / Column	FROM	Terminal	Conductor	TO	Terminal	Page / Column	Function text
READY	=4LKD001AR+4LKD004AR/270.11	=4LKD001AR+4LKD004AR-X 270 06	3:A	**1**	=4 FES 010 MO+4 FES 009 TD-X1	5:A	=4LKD001AR+4LKD004AR/270.11	READY
=	=4LKD001AR+4LKD004AR/270.11	=4LKD001AR+4LKD004AR-X 270 06	8:A	**2**	=4 FES 010 MO+4 FES 009 TD-X1	6:A	=4LKD001AR+4LKD004AR/270.11	=
	=4LKD001AR+4LKD004AR/271.4	=4LKD001AR+4LKD004AR-X 270 06	4:B	**3**	=4 FES 010 MO+4 FES 009 TD-X1	11:A	=4LKD001AR+4LKD004AR/271.4	
CLOSED CHAIN CONVEYOR FOR ASH DISPATCH - "0" PULSE	=4LKD001AR+4LKD004AR/271.6	=4LKD001AR+4LKD004AR-X 270 06	14:B	**4**	=4 FES 010 MO+4 FES 009 TD-X1	12:A	=4LKD001AR+4LKD004AR/271.6	CLOSED CHAIN CONVEYOR FOR ASH DISPATCH - "0" PULSE
=	=4LKD001AR+4LKD004AR/271.8	=4LKD001AR+4LKD004AR-X 270 06	5:B	**5**	=4 FES 010 MO+4 FES 009 TD-X1	13:A	=4LKD001AR+4LKD004AR/271.8	=
CONVOYEUR À CHAINE VERS ÉVACUATION DES CENDRES SOUS CHAUDIÈRE - BLOCKAGE DETECTION	=4LKD001AR+4LKD004AR/271.9	=4LKD001AR+4LKD004AR-X 270 06	15:B	**6**	=4 FES 010 MO+4 FES 009 TD-X1	14:A	=4LKD001AR+4LKD004AR/271.9	CONVOYEUR À CHAINE VERS ÉVACUATION DES CENDRES SOUS CHAUDIÈRE - BLOCKAGE DETECTION
	=4LKD001AR+4LKD004AR/295.4	=4LKD001AR+4LKD004AR-XS 295 02	14:A	**7**	=4 FES 010 MO+4 FES 010 MO-X1	?:A	=4LKD001AR+4LKD004AR/295.4	
	=4LKD001AR+4LKD004AR/295.5	=4LKD001AR+4LKD004AR-XS 295 02	15:A	**8**	=4 FES 010 MO+4 FES 010 MO-X1	?:A	=4LKD001AR+4LKD004AR/295.5	
	=4LKD001AR+4LKD004AR/295.6	=4LKD001AR+4LKD004AR-XS 295 02	16:A	**9**	=4 FES 010 MO+4 FES 010 MO-X1	?:A	=4LKD001AR+4LKD004AR/295.6	
	=4LKD001AR+4LKD004AR/295.7	=4LKD001AR+4LKD004AR-XS 295 02	17:A	**10**	=4 FES 010 MO+4 FES 010 MO-X1	?:A	=4LKD001AR+4LKD004AR/295.7	
	=4LKD001AR+4LKD004AR/295.8	=4LKD001AR+4LKD004AR-XS 295 02	18:A	**11**	=4 FES 010 MO+4 FES 010 MO-X1	?:A	=4LKD001AR+4LKD004AR/295.8	
	=4LKD001AR+4LKD004AR/295.9	=4LKD001AR+4LKD004AR-PE		**GNYE**	=4 FES 010 MO+4 FES 010 MO-PE		=4LKD001AR+4LKD004AR/295.8	

Cable name: **4LKD004AR/ 4FES010MO-B-01**

Cable type: **U1000R2V** No. of conn., diameter, length: **4G2.5 mm² /**

Remark:

Function text	Page / Column	FROM	Terminal	Conductor	TO	Terminal	Page / Column	Function text
	=4LKD001AR+4LKD004AR/267.5	=4LKD001AR+4LKD004AR-X 267 05	1:A	**BN**	=4 FES 010 MO+4 FES 010 MO-M34	U1	=4LKD001AR+4LKD004AR/267.5	
[4 FES 010 MO] CLOSED CHAIN CONVEYOR FOR ASH DISPATCH	=4LKD001AR+4LKD004AR/267.5	=4LKD001AR+4LKD004AR-X 267 05	2:A	**BK**	=4 FES 010 MO+4 FES 010 MO-M34	V1	=4LKD001AR+4LKD004AR/267.5	
=	=4LKD001AR+4LKD004AR/267.5	=4LKD001AR+4LKD004AR-X 267 05	3:A	**GY**	=4 FES 010 MO+4 FES 010 MO-M34	W1	=4LKD001AR+4LKD004AR/267.5	
	=4LKD001AR+4LKD004AR/267.7	=4LKD001AR+4LKD004AR-PE		**GNYE**	=4 FES 010 MO+4 FES 010 MO-M34	PE	=4LKD001AR+4LKD004AR/267.5	

1	2	3	4	5	6	7	8	9	10	11	12	13	14	15	16	17	18

Cable name: **4LKD004AR/ 4FES011XV-C-01**

Cable type: **U1000R2V** | No. of conn., diameter, length: **5G1.5 mm² /**

Remark:

Function text	Page / Column	FROM	Terminal	Conductor	TO	Terminal	Page / Column	Function text
FORWARD	=4LKD001AR+4LKD004AR/258.9	=4LKD001AR+4LKD004AR-X 258 09	1:A	**BN**	=4 FES 012 MO+4 FES 011 XV-X1	3	=4LKD001AR+4LKD004AR/258.9	FORWARD
=	=4LKD001AR+4LKD004AR/258.9			**BK**	=4LKD001AR+4LKD004AR-X 258 09	4:A	=4LKD001AR+4LKD004AR/258.10	=
=	=4LKD001AR+4LKD004AR/258.9	=4LKD001AR+4LKD004AR-X 258 09	2:A	**GY**	=4 FES 012 MO+4 FES 011 XV-X1	8	=4LKD001AR+4LKD004AR/258.9	=
BACKWARD	=4LKD001AR+4LKD004AR/258.15	=4LKD001AR+4LKD004AR-X 258 09	7:A	**BU**	=4 FES 012 MO+4 FES 011 XV-X1	10	=4LKD001AR+4LKD004AR/258.15	BACKWARD
	=4LKD001AR+4LKD004AR/295.3	=4LKD001AR+4LKD004AR-PE		**GNYE**	=4 FES 012 MO+4 FES 012 MO-PE		=4LKD001AR+4LKD004AR/295.2	

Cable name: **4LKD004AR/ 4FES011XV-C-02**

Cable type: **U1000R2V** | No. of conn., diameter, length: **7G1.5 mm² /**

Remark:

Function text	Page / Column	FROM	Terminal	Conductor	TO	Terminal	Page / Column	Function text
READY	=4LKD001AR+4LKD004AR/260.11	=4LKD001AR+4LKD004AR-X 260 06	3:A	**1**	=4 FES 012 MO+4 FES 011 XV-X1	5:A	=4LKD001AR+4LKD004AR/260.11	READY
=	=4LKD001AR+4LKD004AR/260.11	=4LKD001AR+4LKD004AR-X 260 06	7:A	**2**	=4 FES 012 MO+4 FES 011 XV-X1	6:A	=4LKD001AR+4LKD004AR/260.11	=
	=4LKD001AR+4LKD004AR/261.4	=4LKD001AR+4LKD004AR-X 260 06	4:B	**3**	=4 FES 012 MO+4 FES 011 XV-X1	11:A	=4LKD001AR+4LKD004AR/261.4	
ROTARY DISPENSER BELOW ECO - "0" PULSE	=4LKD001AR+4LKD004AR/261.6	=4LKD001AR+4LKD004AR-X 260 06	13:B	**4**	=4 FES 012 MO+4 FES 011 XV-X1	12:A	=4LKD001AR+4LKD004AR/261.6	ROTARY DISPENSER BELOW ECO - "0" PULSE
	=4LKD001AR+4LKD004AR/295.4	=4LKD001AR+4LKD004AR-XS 295 02	8:A	**5**	=4 FES 012 MO+4 FES 012 MO-X1	?:A	=4LKD001AR+4LKD004AR/295.4	
	=4LKD001AR+4LKD004AR/295.5	=4LKD001AR+4LKD004AR-XS 295 02	9:A	**6**	=4 FES 012 MO+4 FES 012 MO-X1	?:A	=4LKD001AR+4LKD004AR/295.5	
	=4LKD001AR+4LKD004AR/295.6	=4LKD001AR+4LKD004AR-PE		**GNYE**	=4 FES 012 MO+4 FES 012 MO-PE		=4LKD001AR+4LKD004AR/295.6	

Cable name: **4LKD004AR/ 4FES012MO-B-01**

Cable type: **U1000R2V** | No. of conn., diameter, length: **4G2.5 mm² /**

Remark:

Function text	Page / Column	FROM	Terminal	Conductor	TO	Terminal	Page / Column	Function text
	=4LKD001AR+4LKD004AR/257.5	=4LKD001AR+4LKD004AR-X 257 05	1:A	**BN**	=4 FES 012 MO+4 FES 012 MO-M32	U1	=4LKD001AR+4LKD004AR/257.5	
[4 FES 012 MO] ROTARY DISPENSER BELOW ECO	=4LKD001AR+4LKD004AR/257.5	=4LKD001AR+4LKD004AR-X 257 05	2:A	**BK**	=4 FES 012 MO+4 FES 012 MO-M32	V1	=4LKD001AR+4LKD004AR/257.5	
=	=4LKD001AR+4LKD004AR/257.5	=4LKD001AR+4LKD004AR-X 257 05	3:A	**GY**	=4 FES 012 MO+4 FES 012 MO-M32	W1	=4LKD001AR+4LKD004AR/257.5	
	=4LKD001AR+4LKD004AR/257.7	=4LKD001AR+4LKD004AR-PE		**GNYE**	=4 FES 012 MO+4 FES 012 MO-M32	PE	=4LKD001AR+4LKD004AR/257.5	

Cable name: **4LKD004AR/ 4FES013XV-C-01**

Cable type: **U1000R2V** | No. of conn., diameter, length: **5G1.5 mm² /**

Remark:

Function text	Page / Column	FROM	Terminal	Conductor	TO	Terminal	Page / Column	Function text
FORWARD	=4LKD001AR+4LKD004AR/263.9	=4LKD001AR+4LKD004AR-X 263 09	1:A	**BN**	=4 FES 014 MO+4 FES 013 XV-X1	3	=4LKD001AR+4LKD004AR/263.9	FORWARD
=	=4LKD001AR+4LKD004AR/263.9			**BK**	=4LKD001AR+4LKD004AR-X 263 09	4:A	=4LKD001AR+4LKD004AR/263.10	=
=	=4LKD001AR+4LKD004AR/263.9	=4LKD001AR+4LKD004AR-X 263 09	2:A	**GY**	=4 FES 014 MO+4 FES 013 XV-X1	8	=4LKD001AR+4LKD004AR/263.9	=
BACKWARD	=4LKD001AR+4LKD004AR/263.15	=4LKD001AR+4LKD004AR-X 263 09	7:A	**BU**	=4 FES 014 MO+4 FES 013 XV-X1	10	=4LKD001AR+4LKD004AR/263.15	BACKWARD
	=4LKD001AR+4LKD004AR/295.9	=4LKD001AR+4LKD004AR-PE		**GNYE**	=4 FES 014 MO+4 FES 014 MO-PE		=4LKD001AR+4LKD004AR/295.8	

1	2	3	4	5	6	7	8	9	10	11	12	13	14	15	16	17	18

Cable name: **4LKD004AR/ 4FES013XV-C-02**

Cable type: **U1000R2V** No. of conn., diameter, length: **7G1.5 mm² /**

Remark:

Function text	Page / Column	FROM	Terminal	Conductor	TO	Terminal	Page / Column	Function text
READY	=4LKD001AR+4LKD004AR/265.11	=4LKD001AR+4LKD004AR-X 265 06	3:A	**1**	=4 FES 014 MO+4 FES 013 XV-X1	5:A	=4LKD001AR+4LKD004AR/265.11	READY
=	=4LKD001AR+4LKD004AR/265.11	=4LKD001AR+4LKD004AR-X 265 06	7:A	**2**	=4 FES 014 MO+4 FES 013 XV-X1	6:A	=4LKD001AR+4LKD004AR/265.11	=
	=4LKD001AR+4LKD004AR/266.4	=4LKD001AR+4LKD004AR-X 265 06	4:B	**3**	=4 FES 014 MO+4 FES 013 XV-X1	11:A	=4LKD001AR+4LKD004AR/266.4	
ROTARY DISPENSER BELOW SH 3 - "0" PULSE	=4LKD001AR+4LKD004AR/266.6	=4LKD001AR+4LKD004AR-X 265 06	13:B	**4**	=4 FES 014 MO+4 FES 013 XV-X1	12:A	=4LKD001AR+4LKD004AR/266.6	ROTARY DISPENSER BELOW SH 3 - "0" PULSE
	=4LKD001AR+4LKD004AR/295.10	=4LKD001AR+4LKD004AR-XS 295 02	10:A	**5**	=4 FES 014 MO+4 FES 014 MO-X1	?:A	=4LKD001AR+4LKD004AR/295.10	
	=4LKD001AR+4LKD004AR/295.11	=4LKD001AR+4LKD004AR-XS 295 02	11:A	**6**	=4 FES 014 MO+4 FES 014 MO-X1	?:A	=4LKD001AR+4LKD004AR/295.11	
	=4LKD001AR+4LKD004AR/295.12	=4LKD001AR+4LKD004AR-PE		**GNYE**	=4 FES 014 MO+4 FES 014 MO-PE		=4LKD001AR+4LKD004AR/295.12	

Cable name: **4LKD004AR/ 4FES014MO-B-01**

Cable type: **U1000R2V** No. of conn., diameter, length: **4G2.5 mm² /**

Remark:

Function text	Page / Column	FROM	Terminal	Conductor	TO	Terminal	Page / Column	Function text
	=4LKD001AR+4LKD004AR/262.5	=4LKD001AR+4LKD004AR-X 262 05	1:A	**BN**	=4 FES 014 MO+4 FES 014 MO-M33	U1	=4LKD001AR+4LKD004AR/262.5	
[4 FES 014 MO] ROTARY DISPENSER BELOW SH 3	=4LKD001AR+4LKD004AR/262.5	=4LKD001AR+4LKD004AR-X 262 05	2:A	**BK**	=4 FES 014 MO+4 FES 014 MO-M33	V1	=4LKD001AR+4LKD004AR/262.5	
=	=4LKD001AR+4LKD004AR/262.5	=4LKD001AR+4LKD004AR-X 262 05	3:A	**GY**	=4 FES 014 MO+4 FES 014 MO-M33	W1	=4LKD001AR+4LKD004AR/262.5	
	=4LKD001AR+4LKD004AR/262.7	=4LKD001AR+4LKD004AR-PE		**GNYE**	=4 FES 014 MO+4 FES 014 MO-M33	PE	=4LKD001AR+4LKD004AR/262.5	

Cable name: **4LKD004AR/ 4FES023TD-C-01**

Cable type: **U1000R2V** No. of conn., diameter, length: **5G1.5 mm² /**

Remark:

Function text	Page / Column	FROM	Terminal	Conductor	TO	Terminal	Page / Column	Function text
TEST FORWARD SAFETY RELAY	=4LKD001AR+4LKD004AR/253.9	=4LKD001AR+4LKD004AR-X 253 09	1:A	**BN**	=4 FES 024 MO+4 FES 02 TD-X1	3	=4LKD001AR+4LKD004AR/253.9	TEST FORWARD SAFETY RELAY
	=4LKD001AR+4LKD004AR/253.9			**BK**	=4LKD001AR+4LKD004AR-X 253 09	4:A	=4LKD001AR+4LKD004AR/253.10	FORWARD
TEST BACKWARD SAFETY RELAY	=4LKD001AR+4LKD004AR/253.15	=4LKD001AR+4LKD004AR-X 253 09	7:A	**GY**	=4 FES 024 MO+4 FES 02 TD-X1	10	=4LKD001AR+4LKD004AR/253.15	TEST BACKWARD SAFETY RELAY
TEST FORWARD SAFETY RELAY	=4LKD001AR+4LKD004AR/253.9	=4LKD001AR+4LKD004AR-X 253 09	2:A	**BU**	=4 FES 024 MO+4 FES 02 TD-X1	8	=4LKD001AR+4LKD004AR/253.9	TEST FORWARD SAFETY RELAY
	=4LKD001AR+4LKD004AR/295.3	=4LKD001AR+4LKD004AR-PE		**GNYE**	=4 FES 024 MO+4 FES 024 MO-PE		=4LKD001AR+4LKD004AR/295.2	

Cable name: **4LKD004AR/ 4FES023TD-C-02**

Cable type: **U1000R2V** No. of conn., diameter, length: **7G1.5 mm² /**

Remark:

Function text	Page / Column	FROM	Terminal	Conductor	TO	Terminal	Page / Column	Function text
READY	=4LKD001AR+4LKD004AR/255.11	=4LKD001AR+4LKD004AR-X 255 06	3:A	**1**	=4 FES 024 MO+4 FES 02 TD-X1	5:A	=4LKD001AR+4LKD004AR/255.11	READY
=	=4LKD001AR+4LKD004AR/255.11	=4LKD001AR+4LKD004AR-X 255 06	8:A	**2**	=4 FES 024 MO+4 FES 02 TD-X1	6:A	=4LKD001AR+4LKD004AR/255.11	=
	=4LKD001AR+4LKD004AR/256.4	=4LKD001AR+4LKD004AR-X 255 06	4:B	**3**	=4 FES 024 MO+4 FES 02 TD-X1	11:A	=4LKD001AR+4LKD004AR/256.4	
CHAIN CONVEYOR FOR DISTRIBUTION - "0" PULSE	=4LKD001AR+4LKD004AR/256.6	=4LKD001AR+4LKD004AR-X 255 06	14:B	**4**	=4 FES 024 MO+4 FES 02 TD-X1	12:A	=4LKD001AR+4LKD004AR/256.6	CHAIN CONVEYOR FOR DISTRIBUTION - "0" PULSE
	=4LKD001AR+4LKD004AR/295.4	=4LKD001AR+4LKD004AR-XS 295 02	12:A	**5**	=4 FES 024 MO+4 FES 024 MO-X1	?:A	=4LKD001AR+4LKD004AR/295.4	
	=4LKD001AR+4LKD004AR/295.5	=4LKD001AR+4LKD004AR-XS 295 02	13:A	**6**	=4 FES 024 MO+4 FES 024 MO-X1	?:A	=4LKD001AR+4LKD004AR/295.5	
	=4LKD001AR+4LKD004AR/295.6	=4LKD001AR+4LKD004AR-PE		**GNYE**	=4 FES 024 MO+4 FES 024 MO-PE		=4LKD001AR+4LKD004AR/295.6	

1	2	3	4	5	6	7	8	9	10	11	12	13	14	15	16	17	18

Cable name: **4LKD004AR/ 4FES024MO-B-01**

Cable type: **U1000R2V** | No. of conn., diameter, length: **4G2.5 mm² /**

Remark:

Function text	Page / Column	FROM	Terminal	Conductor	TO	Terminal	Page / Column	Function text
	=4LKD001AR+4LKD004AR/252.5	=4LKD001AR+4LKD004AR-X 252 05	1:A	**BN**	=4 FES 024 MO+4 FES 024 MO-M31	U1	=4LKD001AR+4LKD004AR/252.5	
[4 FES 024 MO] CHAIN CONVEYOR FOR DISTRIBUTION	=4LKD001AR+4LKD004AR/252.5	=4LKD001AR+4LKD004AR-X 252 05	2:A	**BK**	=4 FES 024 MO+4 FES 024 MO-M31	V1	=4LKD001AR+4LKD004AR/252.5	
=	=4LKD001AR+4LKD004AR/252.5	=4LKD001AR+4LKD004AR-X 252 05	3:A	**GY**	=4 FES 024 MO+4 FES 024 MO-M31	W1	=4LKD001AR+4LKD004AR/252.5	
	=4LKD001AR+4LKD004AR/252.7	=4LKD001AR+4LKD004AR-PE		**GNYE**	=4 FES 024 MO+4 FES 024 MO-M31	PE	=4LKD001AR+4LKD004AR/252.5	

Date:	17.03.2026.	SINTAKSA A Voith Company	Client:	ANDRITZ TEP d.o.o. Ulica 108. brigade ZNG 84, 35000 Slavonski Brod, Croatia	Scope: BOILER/LOW VOLTAGE CABINET BOILER (NORMAL) 4	Project: BRC-4	Unit & Issuer: ATEP0	Number: 1874	Revision: G
Drawn:	Luka Božičević								#X
Approved:	Grga Kolić		Object:	RDF Albioma Les Bois Rouge Reunion - France	Content: CABLE DIAGRAM	Drawing designation: BRC-4-ATEP0-1874-G			=4LKD001AR
Format:	A3								+4LKD004AR

Sheet: 504

Next: 601

Terminal diagram

Strip

=4LKD001AR+4LKD004AR-X 252 05

A SIDE								B SIDE
Placement	Target designation	Cable name and type	Conductor	Jumper		Wiring	Target designation
/252.5	=4 FES 024 MO+4 FES 024 MO-M31:U1	4LKD004AR/ 4FES024MO-B-01 U1000R2V 4G2.5 mm²	BN 2.5 mm²	'	1	BK 2.5 mm²	-KM 252 05:2/T1
/252.5	=4 FES 024 MO+4 FES 024 MO-M31:V1	4LKD004AR/ 4FES024MO-B-01 U1000R2V 4G2.5 mm²	BK 2.5 mm²	'	2	BK 2.5 mm²	-KM 252 05:4/T2
/252.5	=4 FES 024 MO+4 FES 024 MO-M31:W1	4LKD004AR/ 4FES024MO-B-01 U1000R2V 4G2.5 mm²	GY 2.5 mm²	'	3	BK 2.5 mm²	-KM 252 05:6/T3

Terminal diagram

Strip

=4LKD001AR+4LKD004AR-X 253 09

A SIDE								B SIDE
Placement	Target designation	Cable name and type	Conductor	Jumper		Wiring	Target designation
/253.9	=4 FES 024 MO+4 FES 024 MO-X1:3	4LKD004AR/ 4FES024MO-C-01 U1000R2V 5G1.5 mm²	BN 1.5 mm²		1	WH 1 mm²	-Q 252 05:21
/253.9	=4 FES 024 MO+4 FES 024 MO-X1:8	4LKD004AR/ 4FES024MO-C-01 U1000R2V 5G1.5 mm²	BU 1.5 mm²		2	WH 1 mm²	-K 254 10:11
					3	WH 1 mm²	-KM 252 05:74
/253.9		4LKD004AR/ 4FES024MO-C-01 U1000R2V 5G1.5 mm²	BK 1.5 mm²		4	WH 1 mm²	-KM 252 05:73
					5	WH 1 mm²	-KM 252 07:73
					6	WH 1 mm²	-S 253 07.1:23
/253.15	=4 FES 024 MO+4 FES 024 MO-X1:10	4LKD004AR/ 4FES024MO-C-01 U1000R2V 5G1.5 mm²	GY 1.5 mm²		7	WH 1 mm²	-K 254 10:21
					8		
					9		
					10		
					11		
					12	WH 1 mm²	-S 253 07.1:43
					13	WH 1 mm²	-RP 253 11:62

Date:	17.03.2026.	SINTAKSA A Voith Company	Client:	ANDRITZ TEP d.o.o. Ulica 108. brigade ZNG 84, 35000 Slavonski Brod, Croatia	Scope: BOILER/LOW VOLTAGE CABINET BOILER (NORMAL) 4	Project: BRC-4	Unit & Issuer: ATEP0	Number: 1874	Revision: G
Drawn:	Luka Božičević								#Y
Approved:	Grga Kolić		Object:	RDF Albioma Les Bois Rouge Reunion - France	Content: Terminal diagram =4LKD001AR+4LKD004AR-X 253 09	Drawing designation: BRC-4-ATEP0-1874-G		=4LKD001AR	Sheet: 602
Format:	A3							+4LKD004AR	Next: 603

Terminal diagram

Strip

=4LKD001AR+4LKD004AR-X 255 06

A SIDE							B SIDE
Placement	Target designation	Cable name and type	Conductor	Jumper		Wiring	Target designation
					1		
					2	RD 1 mm²	-KM 252 05:83
/255.11	=4 FES 024 MO+4 FES 024 MO-X1:5:A	4LKD004AR/ 4FES024MO-C-02 U1000R2V 7G1.5 mm²	1 1.5 mm²		3		
					4	3 1.5 mm²	=4 FES 024 MO+4 FES 024
					5		
					6	RD 1 mm²	-KM 252 05:84
					7	RD 1 mm²	-KM 252 07:84
/255.11	=4 FES 024 MO+4 FES 024 MO-X1:6:A	4LKD004AR/ 4FES024MO-C-02 U1000R2V 7G1.5 mm²	2 1.5 mm²		8	RD 1 mm²	-K 254 10:31
					9	RD 1 mm²	-S 253 07.1:54
					10		
					11		
					12		
					13		
					14	4 1.5 mm²	=4 FES 024 MO+4 FES 024
					15		
					16		
					17		
					18		

Date:	17.03.2026.	SINTAKSA A Voith Company	Client:	ANDRITZ TEP d.o.o. Ulica 108. brigade ZNG 84, 35000 Slavonski Brod, Croatia	Scope: BOILER/LOW VOLTAGE CABINET BOILER (NORMAL) 4	Project: BRC-4	Unit & Issuer: ATEP0	Number: 1874	Revision: G
Drawn:	Luka Božičević								#Y
Approved:	Grga Kolić		Object:	RDF Albioma Les Bois Rouge Reunion - France	Content: Terminal diagram =4LKD001AR+4LKD004AR-X 255 06	Drawing designation: BRC-4-ATEP0-1874-G		=4LKD001AR	Sheet: 603
Format:	A3							+4LKD004AR	Next: 604

Terminal diagram

Strip

=4LKD001AR+4LKD004AR-X 257 05

A SIDE								B SIDE
Placement	Target designation	Cable name and type	Conductor	Jumper		Wiring	Target designation
/257.5	=4 FES 012 MO+4 FES 012 MO-M32:U1	4LKD004AR/ 4FES012MO-B-01 U1000R2V 4G2.5 mm²	BN 2.5 mm²	'	1	BK 2.5 mm²	-KM 257 05:2/T1
/257.5	=4 FES 012 MO+4 FES 012 MO-M32:V1	4LKD004AR/ 4FES012MO-B-01 U1000R2V 4G2.5 mm²	BK 2.5 mm²	'	2	BK 2.5 mm²	-KM 257 05:4/T2
/257.5	=4 FES 012 MO+4 FES 012 MO-M32:W1	4LKD004AR/ 4FES012MO-B-01 U1000R2V 4G2.5 mm²	GY 2.5 mm²	'	3	BK 2.5 mm²	-KM 257 05:6/T3

Date:	17.03.2026.	SINTAKSA A Voith Company	Client:	ANDRITZ TEP d.o.o. Ulica 108. brigade ZNG 84, 35000 Slavonski Brod, Croatia	Scope: BOILER/LOW VOLTAGE CABINET BOILER (NORMAL) 4	Project: BRC-4	Unit & Issuer: ATEP0	Number: 1874	Revision: G
Drawn:	Luka Božičević								#Y
Approved:	Grga Kolić		Object:	RDF Albioma Les Bois Rouge Reunion - France	Content: Terminal diagram =4LKD001AR+4LKD004AR-X 257 05	Drawing designation: BRC-4-ATEP0-1874-G			=4LKD001AR
Format:	A3								+4LKD004AR

Sheet: 604

Next: 605

Terminal diagram

Strip

=4LKD001AR+4LKD004AR-X 258 09

A SIDE						B SIDE
Placement	Target designation	Cable name and type	Conductor	Jumper	Wiring	Target designation
/258.9	=4 FES 012 MO+4 FES 012 MO-X1:3	4LKD004AR/ 4FES012MO-C-01 U1000R2V 5G1.5 mm²	BN 1.5 mm²		WH 1 mm²	-Q 257 05:21
/258.9	=4 FES 012 MO+4 FES 012 MO-X1:8	4LKD004AR/ 4FES012MO-C-01 U1000R2V 5G1.5 mm²	GY 1.5 mm²		WH 1 mm²	-K 259 10:11
					WH 1 mm²	-KM 257 05:74
/258.9		4LKD004AR/ 4FES012MO-C-01 U1000R2V 5G1.5 mm²	BK 1.5 mm²		WH 1 mm²	-KM 257 05:73
					WH 1 mm²	-KM 257 07:73
					WH 1 mm²	-S 258 07.1:23
/258.15	=4 FES 012 MO+4 FES 012 MO-X1:10	4LKD004AR/ 4FES012MO-C-01 U1000R2V 5G1.5 mm²	BU 1.5 mm²		WH 1 mm²	-K 259 10:21
					WH 1 mm²	-S 258 07.1:43

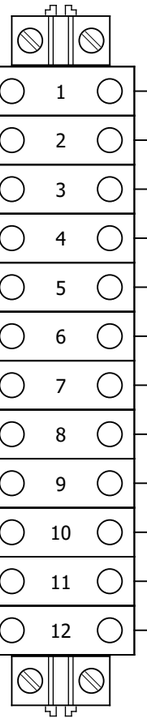

Date:	17.03.2026.	SINTAKSA A Voith Company	Client:	ANDRITZ TEP d.o.o. Ulica 108. brigade ZNG 84, 35000 Slavonski Brod, Croatia	Scope: BOILER/LOW VOLTAGE CABINET BOILER (NORMAL) 4	Project: BRC-4	Unit & Issuer: ATEP0	Number: 1874	Revision: G
Drawn:	Luka Božičević								#Y
Approved:	Grga Kolić		Object:	RDF Albioma Les Bois Rouge Reunion - France	Content: Terminal diagram =4LKD001AR+4LKD004AR-X 258 09	Drawing designation: BRC-4-ATEP0-1874-G			=4LKD001AR
Format:	A3								+4LKD004AR

Sheet: 605
Next: 606

Terminal diagram

Strip

=4LKD001AR+4LKD004AR-X 260 06

A SIDE						B SIDE
Placement	Target designation	Cable name and type	Conductor	Jumper	Wiring	Target designation
				1		
				2	RD 1 mm²	-KM 257 05:83
/260.11	=4 FES 012 MO+4 FES 012 MO-X1:5:A	4LKD004AR/ 4FES012MO-C-02 U1000R2V 7G1.5 mm²	1 1.5 mm²	3		
				4	3 1.5 mm²	=4 FES 012 MO+4 FES 012
				5	RD 1 mm²	-KM 257 05:84
				6	RD 1 mm²	-KM 257 07:84
/260.11	=4 FES 012 MO+4 FES 012 MO-X1:6:A	4LKD004AR/ 4FES012MO-C-02 U1000R2V 7G1.5 mm²	2 1.5 mm²	7	RD 1 mm²	-K 259 10:31
				8	RD 1 mm²	-S 258 07.1:54
				9		
				10		
				11		
				12		
				13	4 1.5 mm²	=4 FES 012 MO+4 FES 012
				14		
				15		
				16		

Date:	17.03.2026.	SINTAKSA A Voith Company	Client:	ANDRITZ TEP d.o.o. Ulica 108. brigade ZNG 84, 35000 Slavonski Brod, Croatia	Scope: BOILER/LOW VOLTAGE CABINET BOILER (NORMAL) 4	Project: BRC-4	Unit & Issuer: ATEP0	Number: 1874	Revision: G
Drawn:	Luka Božičević								#Y
Approved:	Grga Kolić		Object:	RDF Albioma Les Bois Rouge Reunion - France	Content: Terminal diagram =4LKD001AR+4LKD004AR-X 260 06	Drawing designation: BRC-4-ATEP0-1874-G			=4LKD001AR
Format:	A3								+4LKD004AR

Sheet: 606
Next: 607

Terminal diagram

Strip

=4LKD001AR+4LKD004AR-X 262 05

A SIDE								B SIDE
Placement	Target designation	Cable name and type	Conductor	Jumper		Wiring	Target designation	
/262.5	=4 FES 014 MO+4 FES 014 MO-M33:U1	4LKD004AR/ 4FES014MO-B-01 U1000R2V 4G2.5 mm²	BN 2.5 mm²	'	1	BK 2.5 mm²	-KM 262 05:2/T1	
/262.5	=4 FES 014 MO+4 FES 014 MO-M33:V1	4LKD004AR/ 4FES014MO-B-01 U1000R2V 4G2.5 mm²	BK 2.5 mm²	'	2	BK 2.5 mm²	-KM 262 05:4/T2	
/262.5	=4 FES 014 MO+4 FES 014 MO-M33:W1	4LKD004AR/ 4FES014MO-B-01 U1000R2V 4G2.5 mm²	GY 2.5 mm²	'	3	BK 2.5 mm²	-KM 262 05:6/T3	

Terminal diagram

Strip

=4LKD001AR+4LKD004AR-X 263 09

A SIDE						B SIDE
Placement	Target designation	Cable name and type	Conductor	Jumper	Wiring	Target designation
/263.9	=4 FES 014 MO+4 FES 014 MO-X1:3	4LKD004AR/ 4FES014MO-C-01 U1000R2V 5G1.5 mm²	BN 1.5 mm²		WH 1 mm²	-Q 262 05:21
/263.9	=4 FES 014 MO+4 FES 014 MO-X1:8	4LKD004AR/ 4FES014MO-C-01 U1000R2V 5G1.5 mm²	GY 1.5 mm²		WH 1 mm²	-K 264 10:11
					WH 1 mm²	-KM 262 05:74
/263.9		4LKD004AR/ 4FES014MO-C-01 U1000R2V 5G1.5 mm²	BK 1.5 mm²		WH 1 mm²	-KM 262 05:73
					WH 1 mm²	-KM 262 07:73
					WH 1 mm²	-S 263 07.1:23
/263.15	=4 FES 014 MO+4 FES 014 MO-X1:10	4LKD004AR/ 4FES014MO-C-01 U1000R2V 5G1.5 mm²	BU 1.5 mm²		WH 1 mm²	-K 264 10:21
					WH 1 mm²	-S 263 07.1:43

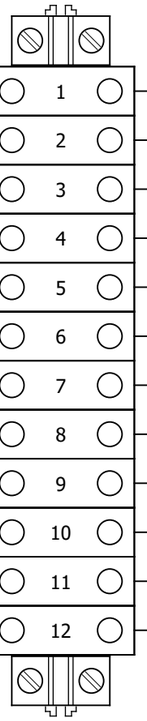

Date:	17.03.2026.	SINTAKSA A Voith Company	Client:	ANDRITZ TEP d.o.o. Ulica 108. brigade ZNG 84, 35000 Slavonski Brod, Croatia	Scope: BOILER/LOW VOLTAGE CABINET BOILER (NORMAL) 4	Project: BRC-4	Unit & Issuer: ATEP0	Number: 1874	Revision: G
Drawn:	Luka Božičević								#Y
Approved:	Grga Kolić		Object:	RDF Albioma Les Bois Rouge Reunion - France	Content: Terminal diagram =4LKD001AR+4LKD004AR-X 263 09	Drawing designation: BRC-4-ATEP0-1874-G			=4LKD001AR
Format:	A3								+4LKD004AR

Sheet: 608

Next: 609

Terminal diagram

Strip

=4LKD001AR+4LKD004AR-X 265 06

A SIDE						B SIDE
Placement	Target designation	Cable name and type	Conductor	Jumper	Wiring	Target designation
				1		
				2	RD 1 mm²	-KM 262 05:83
/265.11	=4 FES 014 MO+4 FES 014 MO-X1:5:A	4LKD004AR/ 4FES014MO-C-02 U1000R2V 7G1.5 mm²	1 1.5 mm²	3		
				4	3 1.5 mm²	=4 FES 014 MO+4 FES 014
				5	RD 1 mm²	-KM 262 05:84
				6	RD 1 mm²	-KM 262 07:84
/265.11	=4 FES 014 MO+4 FES 014 MO-X1:6:A	4LKD004AR/ 4FES014MO-C-02 U1000R2V 7G1.5 mm²	2 1.5 mm²	7	RD 1 mm²	-K 264 10:31
				8	RD 1 mm²	-S 263 07.1:54
				9		
				10		
				11		
				12		
				13	4 1.5 mm²	=4 FES 014 MO+4 FES 014
				14		
				15		
				16		

Date:	17.03.2026.	SINTAKSA A Voith Company	Client: ANDRITZ TEP d.o.o. Ulica 108. brigade ZNG 84, 35000 Slavonski Brod, Croatia	Scope: BOILER/LOW VOLTAGE CABINET BOILER (NORMAL) 4	Project: BRC-4	Unit & Issuer: ATEP0	Number: 1874	Revision: G
Drawn:	Luka Božičević							#Y
Approved:	Grga Kolić		Object: RDF Albioma Les Bois Rouge Reunion - France	Content: Terminal diagram =4LKD001AR+4LKD004AR-X 265 06	Drawing designation: BRC-4-ATEP0-1874-G			=4LKD001AR
Format:	A3							+4LKD004AR

Sheet: 609
Next: 610

Terminal diagram

Strip

=4LKD001AR+4LKD004AR-X 267 05

A SIDE								B SIDE
Placement	Target designation	Cable name and type	Conductor	Jumper		Wiring	Target designation	
/267.5	=4 FES 010 MO+4 FES 010 MO-M34:U1	4LKD004AR/ 4FES010MO-B-01 U1000R2V 4G2.5 mm²	BN 2.5 mm²	'	1	BK 2.5 mm²	-KM 267 05:2/T1	
/267.5	=4 FES 010 MO+4 FES 010 MO-M34:V1	4LKD004AR/ 4FES010MO-B-01 U1000R2V 4G2.5 mm²	BK 2.5 mm²	'	2	BK 2.5 mm²	-KM 267 05:4/T2	
/267.5	=4 FES 010 MO+4 FES 010 MO-M34:W1	4LKD004AR/ 4FES010MO-B-01 U1000R2V 4G2.5 mm²	GY 2.5 mm²	'	3	BK 2.5 mm²	-KM 267 05:6/T3	

Date:	17.03.2026.	SINTAKSA A Voith Company	Client:	ANDRITZ TEP d.o.o. Ulica 108. brigade ZNG 84, 35000 Slavonski Brod, Croatia	Scope: BOILER/LOW VOLTAGE CABINET BOILER (NORMAL) 4	Project: BRC-4	Unit & Issuer: ATEP0	Number: 1874	Revision: G
Drawn:	Luka Božičević								#Y
Approved:	Grga Kolić		Object:	RDF Albioma Les Bois Rouge Reunion - France	Content: Terminal diagram =4LKD001AR+4LKD004AR-X 267 05	Drawing designation: BRC-4-ATEP0-1874-G			=4LKD001AR
Format:	A3								+4LKD004AR

Sheet: 610

Next: 611

Terminal diagram

Strip

=4LKD001AR+4LKD004AR-X 268 09

A SIDE						B SIDE
Placement	Target designation	Cable name and type	Conductor	Jumper	Wiring	Target designation
/268.9	=4 FES 010 MO+4 FES 010 MO-X1:3	4LKD004AR/ 4FES010MO-C-01 U1000R2V 5G1.5 mm²	BN 1.5 mm²		WH 1 mm²	-Q 267 05:21
/268.9	=4 FES 010 MO+4 FES 010 MO-X1:8	4LKD004AR/ 4FES010MO-C-01 U1000R2V 5G1.5 mm²	GY 1.5 mm²		WH 1 mm²	-K 269 10:11
					WH 1 mm²	-KM 267 05:74
/268.9		4LKD004AR/ 4FES010MO-C-01 U1000R2V 5G1.5 mm²	BK 1.5 mm²		WH 1 mm²	-KM 267 05:73
					WH 1 mm²	-KM 267 07:73
					WH 1 mm²	-S 268 07.1:23
/268.15	=4 FES 010 MO+4 FES 010 MO-X1:10:A	4LKD004AR/ 4FES010MO-C-01 U1000R2V 5G1.5 mm²	BU 1.5 mm²		WH 1 mm²	-K 269 10:21
					WH 1 mm²	-S 268 07.1:43

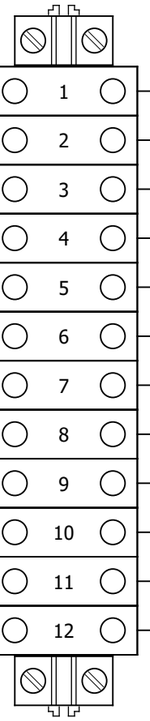

Date:	17.03.2026.	SINTAKSA A Voith Company	Client:	ANDRITZ TEP d.o.o. Ulica 108. brigade ZNG 84, 35000 Slavonski Brod, Croatia	Scope: BOILER/LOW VOLTAGE CABINET BOILER (NORMAL) 4	Project: BRC-4	Unit & Issuer: ATEP0	Number: 1874	Revision: G
Drawn:	Luka Božičević								#Y
Approved:	Grga Kolić		Object:	RDF Albioma Les Bois Rouge Reunion - France	Content: Terminal diagram =4LKD001AR+4LKD004AR-X 268 09	Drawing designation: BRC-4-ATEP0-1874-G			=4LKD001AR
Format:	A3								+4LKD004AR

Sheet: 611

Next: 612

Terminal diagram

Strip

=4LKD001AR+4LKD004AR-X 270 06

A SIDE							B SIDE
Placement	Target designation	Cable name and type	Conductor	Jumper		Wiring	Target designation
					1		
					2	RD 1 mm²	-KM 267 05:83
/270.11	=4 FES 010 MO+4 FES 010 MO-X1:5:A	4LKD004AR/ 4FES010MO-C-02 U1000R2V 12G1.5 mm²	1 1.5 mm²		3		
					4	3 1.5 mm²	=4 FES 010 MO+4 FES 010
					5	5 1.5 mm²	=4 FES 010 MO+4 FES 010
					6	RD 1 mm²	-KM 267 05:84
					7	RD 1 mm²	-KM 267 07:84
/270.11	=4 FES 010 MO+4 FES 010 MO-X1:6:A	4LKD004AR/ 4FES010MO-C-02 U1000R2V 12G1.5 mm²	2 1.5 mm²		8	RD 1 mm²	-K 269 10:31
					9	RD 1 mm²	-S 268 07.1:54
					10		
					11		
					12		
					13		
					14	4 1.5 mm²	=4 FES 010 MO+4 FES 010
					15	6 1.5 mm²	=4 FES 010 MO+4 FES 010
					16		
					17		
					18		

Date:	17.03.2026.	SINTAKSA A Voith Company	Client:	ANDRITZ TEP d.o.o. Ulica 108. brigade ZNG 84, 35000 Slavonski Brod, Croatia	Scope: BOILER/LOW VOLTAGE CABINET BOILER (NORMAL) 4	Project: BRC-4	Unit & Issuer: ATEP0	Number: 1874	Revision: G
Drawn:	Luka Božičević								#Y
Approved:	Grga Kolić		Object:	RDF Albioma Les Bois Rouge Reunion - France	Content: Terminal diagram =4LKD001AR+4LKD004AR-X 270 06	Drawing designation: BRC-4-ATEP0-1874-G		=4LKD001AR	Sheet: 612
Format:	A3							+4LKD004AR	Next: 613

Terminal diagram

Strip

=4LKD001AR+4LKD004AR-XB 272 03

A SIDE						B SIDE
Placement	Target designation	Cable name and type	Conductor	Jumper	Wiring	Target designation
+4LKD003AR/189.5	+4LKD003AR-XB 189 03:6:A		GY 1 mm²	1	GY 1 mm²	-HL 253 02:2
				2	GY 1 mm²	-HL 258 04:2
				3	GY 1 mm²	-HL 263 04:2
				4	GY 1 mm²	-HL 268 04:2
				5		
+4LKD007AR/533.3	+4LKD007AR-XB 533 03:1:A		GY 1 mm²	6		

Date:	17.03.2026.	SINTAKSA A Voith Company	Client:	ANDRITZ TEP d.o.o. Ulica 108. brigade ZNG 84, 35000 Slavonski Brod, Croatia	Scope: BOILER/LOW VOLTAGE CABINET BOILER (NORMAL) 4	Project: BRC-4	Unit & Issuer: ATEP0	Number: 1874	Revision: G
Drawn:	Luka Božičević								#Y
Approved:	Grga Kolić		Object:	RDF Albioma Les Bois Rouge Reunion - France	Content: Terminal diagram =4LKD001AR+4LKD004AR-XB 272 03	Drawing designation: BRC-4-ATEP0-1874-G			=4LKD001AR
Format:	A3								+4LKD004AR

Sheet: 613

Next: 614

Terminal diagram

Strip

=4LKD001AR+4LKD004AR-XS 291 03

A SIDE						B SIDE
Placement	Target designation	Cable name and type	Conductor	Jumper	Wiring	Target designation
				1		
				2	RD 1 mm²	-QB 251 09:11
				3		
				4	RD 1 mm²	-QB 251 09:14
				5		
				6		
				7		
				8		
				9		
				10		

Date:	17.03.2026.	SINTAKSA A Voith Company	Client:	ANDRITZ TEP d.o.o. Ulica 108. brigade ZNG 84, 35000 Slavonski Brod, Croatia	Scope: BOILER/LOW VOLTAGE CABINET BOILER (NORMAL) 4	Project: BRC-4	Unit & Issuer: ATEP0	Number: 1874	Revision: G
Drawn:	Luka Božičević								#Y
Approved:	Grga Kolić		Object:	RDF Albioma Les Bois Rouge Reunion - France	Content: Terminal diagram =4LKD001AR+4LKD004AR-XS 291 03	Drawing designation: BRC-4-ATEP0-1874-G			=4LKD001AR
Format:	A3								+4LKD004AR

Sheet: 614

Next: 615

Terminal diagram

Strip

=4LKD001AR+4LKD004AR-XS 295 02

A SIDE						B SIDE
Placement	Target designation	Cable name and type	Conductor	Jumper	Wiring	Target designation
				1	GNYE 2.5 mm²	-PE
				2		
				3		
				4		
				5		
				6		
				7		
/295.4	=4 FES 012 MO+4 FES 012 MO-X1:?:A	4LKD004AR/ 4FES012MO-C-02 U1000R2V 7G1.5 mm²	5 1.5 mm²	8		
/295.5	=4 FES 012 MO+4 FES 012 MO-X1:?:A	4LKD004AR/ 4FES012MO-C-02 U1000R2V 7G1.5 mm²	6 1.5 mm²	9		
/295.10	=4 FES 014 MO+4 FES 014 MO-X1:?:A	4LKD004AR/ 4FES014MO-C-02 U1000R2V 7G1.5 mm²	5 1.5 mm²	10		
/295.11	=4 FES 014 MO+4 FES 014 MO-X1:?:A	4LKD004AR/ 4FES014MO-C-02 U1000R2V 7G1.5 mm²	6 1.5 mm²	11		
/295.4	=4 FES 024 MO+4 FES 024 MO-X1:?:A	4LKD004AR/ 4FES024MO-C-02 U1000R2V 7G1.5 mm²	5 1.5 mm²	12		
/295.5	=4 FES 024 MO+4 FES 024 MO-X1:?:A	4LKD004AR/ 4FES024MO-C-02 U1000R2V 7G1.5 mm²	6 1.5 mm²	13		
/295.4	=4 FES 010 MO+4 FES 010 MO-X1:?:A	4LKD004AR/ 4FES010MO-C-02 U1000R2V 12G1.5 mm²	7 1.5 mm²	14		
/295.5	=4 FES 010 MO+4 FES 010 MO-X1:?:A	4LKD004AR/ 4FES010MO-C-02 U1000R2V 12G1.5 mm²	8 1.5 mm²	15		
/295.6	=4 FES 010 MO+4 FES 010 MO-X1:?:A	4LKD004AR/ 4FES010MO-C-02 U1000R2V 12G1.5 mm²	9 1.5 mm²	16		
/295.7	=4 FES 010 MO+4 FES 010 MO-X1:?:A	4LKD004AR/ 4FES010MO-C-02 U1000R2V 12G1.5 mm²	10 1.5 mm²	17		
/295.8	=4 FES 010 MO+4 FES 010 MO-X1:?:A	4LKD004AR/ 4FES010MO-C-02 U1000R2V 12G1.5 mm²	11 1.5 mm²	18		
				19		
				20		
				21		
				22		
				23		
				24		
				25		

Terminal diagram

Strip

=4LKD001AR+4LKD004AR-XS 295 02

A SIDE						B SIDE
Placement	Target designation	Cable name and type	Conductor	Jumper	Wiring	Target designation
				26		
				27		
				28		
				29		
				30		

Date:	17.03.2026.	SINTAKSA A Voith Company	Client:	ANDRITZ TEP d.o.o. Ulica 108. brigade ZNG 84, 35000 Slavonski Brod, Croatia	Scope: BOILER/LOW VOLTAGE CABINET BOILER (NORMAL) 4	Project: BRC-4	Unit & Issuer: ATEP0	Number: 1874	Revision: G
Drawn:	Luka Božičević								#Y
Approved:	Grga Kolić		Object:	RDF Albioma Les Bois Rouge Reunion - France	Content: Terminal diagram =4LKD001AR+4LKD004AR-XS 295 02	Drawing designation: BRC-4-ATEP0-1874-G			=4LKD001AR
Format:	A3								+4LKD004AR

Sheet: 616

Next: +4LKD005AR/1

SINTAKSA
A Voith Company

Ulica Domovinskog rata 104C,
21 000 Split, Hrvatska / Croatia
OIB: 32357958120
T: +385 1 2310 273
www.sintaksa.hr

SCHÉMA DE CÂBLAGE ÉLECTRIQUE

Projet / tâche:

RDF Albioma Les Bois Rouge
Reunion - France

Cadre:

BOILER/LOW VOLTAGE
CABINET BOILER (NORMAL)
5
+4LKD005AR

Client / acheteur:

ANDRITZ TEP d.o.o.
Ulica 108. brigade ZNG 84, 35000
Slavonski Brod, Croatia

Code du document:

BRC-4-ATEP0-1874-G

Date:
17.03.2026.

Date:	17.03.2026.	SINTAKSA A Voith Company	Client:	ANDRITZ TEP d.o.o. Ulica 108. brigade ZNG 84, 35000 Slavonski Brod, Croatia	Scope: BOILER/LOW VOLTAGE CABINET BOILER (NORMAL) 5	Project: BRC-4	Unit & Issuer: ATEP0	Number: 1874	Revision: G
Drawn:	Luka Božičević								#A
Approved:	Grga Kolić		Object:	RDF Albioma Les Bois Rouge Reunion - France	Content: TITLE PAGE	Drawing designation: BRC-4-ATEP0-1874-G			=4LKD001AR
Format:	A3								+4LKD005AR

Sheet: 1
Next: 2

Table of contents

Page number	Page description	Remarks of creator	Date	Checked by	Revision
2	TABLE OF CONTENTS		2026/06/17		
3	TABLE OF CONTENTS		2026/06/17		
341	400VAC DISTRIBUTION		2026/05/27		G
342	ASH CRUSHER BELOW SH 2		2026/06/06		G
343	ASH CRUSHER BELOW SH 2 - CONTROL		2026/06/06		G
344	ASH CRUSHER BELOW SH 2 - CONTROL		2026/06/06		G
345	ASH CRUSHER BELOW SH 2 - SIGNALIZATION		2026/06/06		G
346	ASH CRUSHER BELOW SH 2 - SIGNALIZATION		2026/06/06		G
347	ASH CRUSHER BELOW SH 1		2026/06/06		G
348	ASH CRUSHER BELOW SH 1 - CONTROL		2026/06/06		G
349	ASH CRUSHER BELOW SH 1 - CONTROL		2026/06/06		G
350	ASH CRUSHER BELOW SH 1 - SIGNALIZATION		2026/06/06		G
351	ASH CRUSHER BELOW SH 1 - SIGNALIZATION		2026/06/06		G
352	ROTARY DISPENSER BELOW SH 2		2026/06/06		G
353	ROTARY DISPENSER BELOW SH 2 - CONTROL		2026/06/06		G
354	ROTARY DISPENSER BELOW SH 2 - CONTROL		2026/06/06		G
355	ROTARY DISPENSER BELOW SH 2 - SIGNALIZATION		2026/06/06		G
356	ROTARY DISPENSER BELOW SH 2 - SIGNALIZATION		2026/06/06		G
357	ROTARY DISPENSER BELOW SH 1		2026/06/06		G
358	ROTARY DISPENSER BELOW SH 1 - CONTROL		2026/06/06		G
359	ROTARY DISPENSER BELOW SH 1 - CONTROL		2026/06/06		G
360	ROTARY DISPENSER BELOW SH 1 - SIGNALIZATION		2026/06/06		G
361	ROTARY DISPENSER BELOW SH 1 - SIGNALIZATION		2026/06/06		G
362	LAMP TEST		2026/06/06		G
381	SIGNALIZATION		2026/06/06		G
385	SPARE		2026/06/10		G
391	COMMUNICATION		2026/05/28		G
401	SUMMARIZED PARTS LIST		2026/05/28		
402	SUMMARIZED PARTS LIST		2026/06/08		
407	Terminal diagram =4LKD001AR+4LKD005AR-X 342 05		2026/05/28		F
408	Terminal diagram =4LKD001AR+4LKD005AR-X 343 09		2026/05/28		F
409	Terminal diagram =4LKD001AR+4LKD005AR-X 345 06		2026/05/28		F
410	Terminal diagram =4LKD001AR+4LKD005AR-X 347 05		2026/05/28		F

Table of contents

Page number	Page description	Remarks of creator	Date	Checked by	Revision
411	Terminal diagram =4LKD001AR+4LKD005AR-X 348 09		2026/05/28		F
412	Terminal diagram =4LKD001AR+4LKD005AR-X 350 06		2026/05/28		F
413	Terminal diagram =4LKD001AR+4LKD005AR-X 352 05		2026/05/28		F
414	Terminal diagram =4LKD001AR+4LKD005AR-X 353 09		2026/05/28		F
415	Terminal diagram =4LKD001AR+4LKD005AR-X 355 06		2026/05/28		F
416	Terminal diagram =4LKD001AR+4LKD005AR-X 357 05		2026/05/28		F
417	Terminal diagram =4LKD001AR+4LKD005AR-X 358 09		2026/05/28		F
418	Terminal diagram =4LKD001AR+4LKD005AR-X 360 06		2026/05/28		F
419	Terminal diagram =4LKD001AR+4LKD005AR-XB 362 03		2026/05/28		F
420	Terminal diagram =4LKD001AR+4LKD005AR-XS 381 03		2026/05/28		F
421	Terminal diagram =4LKD001AR+4LKD005AR-XS 385 02		2026/05/28		F
422	Terminal diagram =4LKD001AR+4LKD005AR-XS 385 02		2026/05/28		F

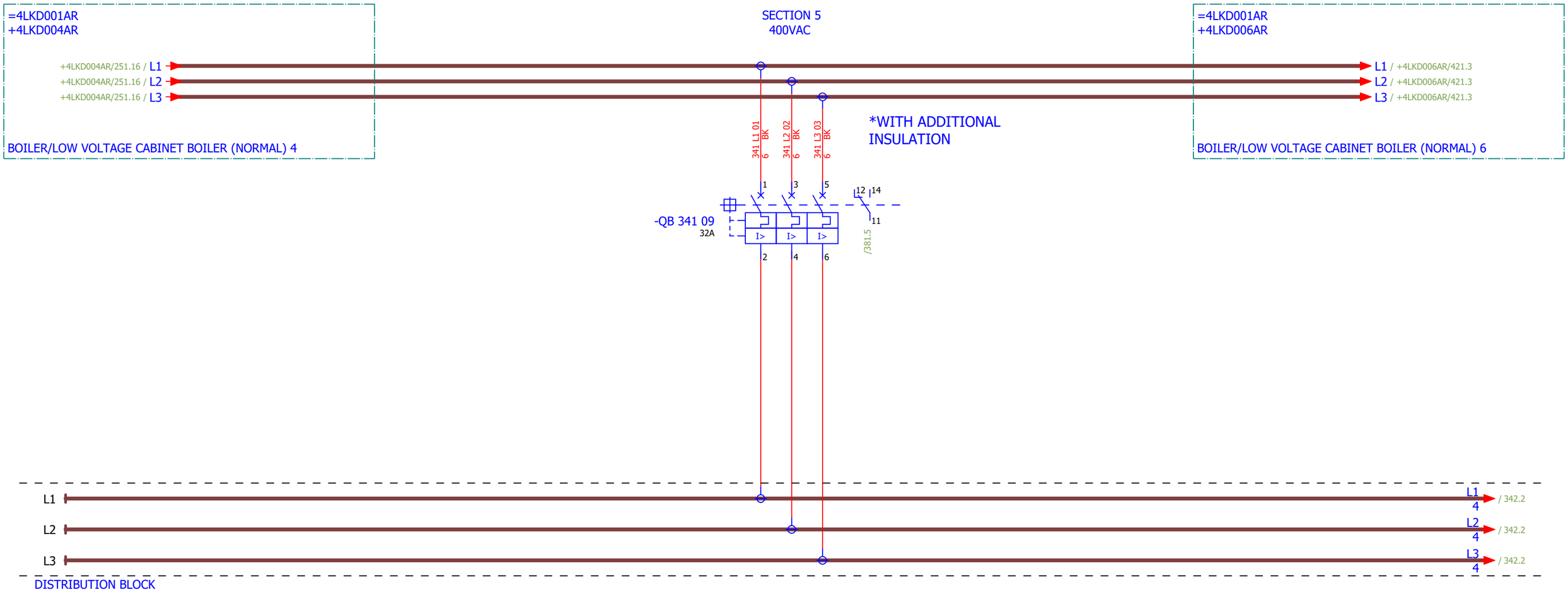

NOTE:
Conducteur de phase L1 avec manchon noir
Conducteur de phase L2 avec manchon marron
Conducteur de phase L3 avec manchon rouge

Date:	17.03.2026.	SINTAKSA A Voith Company	Client:	ANDRITZ TEP d.o.o. Ulica 108. brigade ZNG 84, 35000 Slavonski Brod, Croatia	Scope: BOILER/LOW VOLTAGE CABINET BOILER (NORMAL) 5	Project: BRC-4	Unit & Issuer: ATEP0	Number: 1874	Revision: G
Drawn:	Luka Božičević								#D
Approved:	Grga Kolić		Object:	RDF Albioma Les Bois Rouge Reunion - France	Content: 400VAC DISTRIBUTION	Drawing designation: BRC-4-ATEP0-1874-G			=4LKD001AR
Format:	A3								+4LKD005AR

Sheet: 341
Next: 342

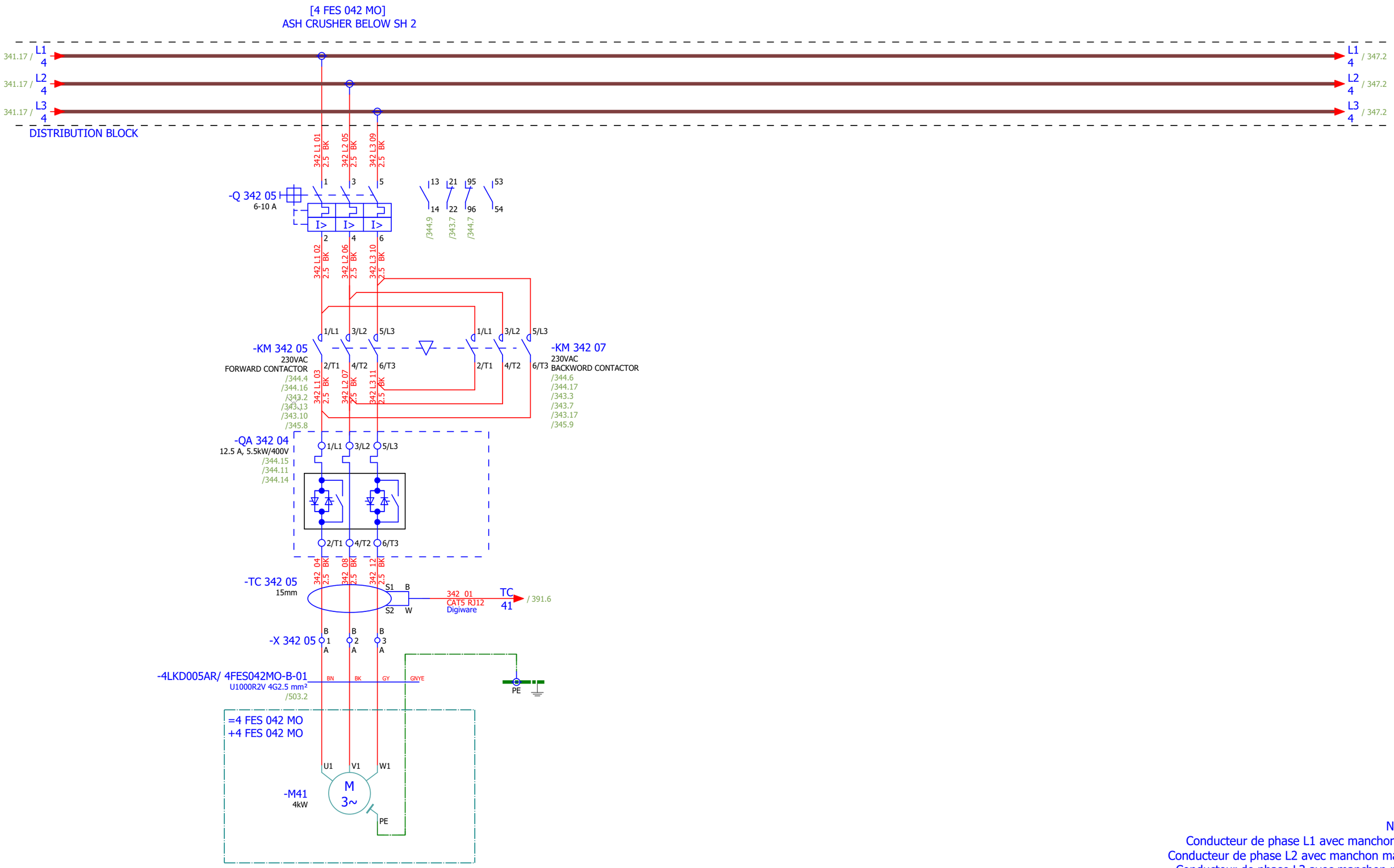

NOTE:
Conducteur de phase L1 avec manchon noir
Conducteur de phase L2 avec manchon marron
Conducteur de phase L3 avec manchon rouge

Date:	17.03.2026.	SINTAKSA A Voith Company	Client:	ANDRITZ TEP d.o.o. Ulica 108. brigade ZNG 84, 35000 Slavonski Brod, Croatia	Scope: BOILER/LOW VOLTAGE CABINET BOILER (NORMAL) 5	Project: BRC-4	Unit & Issuer: ATEP0	Number: 1874	Revision: G
Drawn:	Luka Božičević								#D
Approved:	Grga Kolić		Object:	RDF Albioma Les Bois Rouge Reunion - France	Content: ASH CRUSHER BELOW SH 2	Drawing designation: BRC-4-ATEP0-1874-G		=4LKD001AR	Sheet: 342
Format:	A3							+4LKD005AR	Next: 343

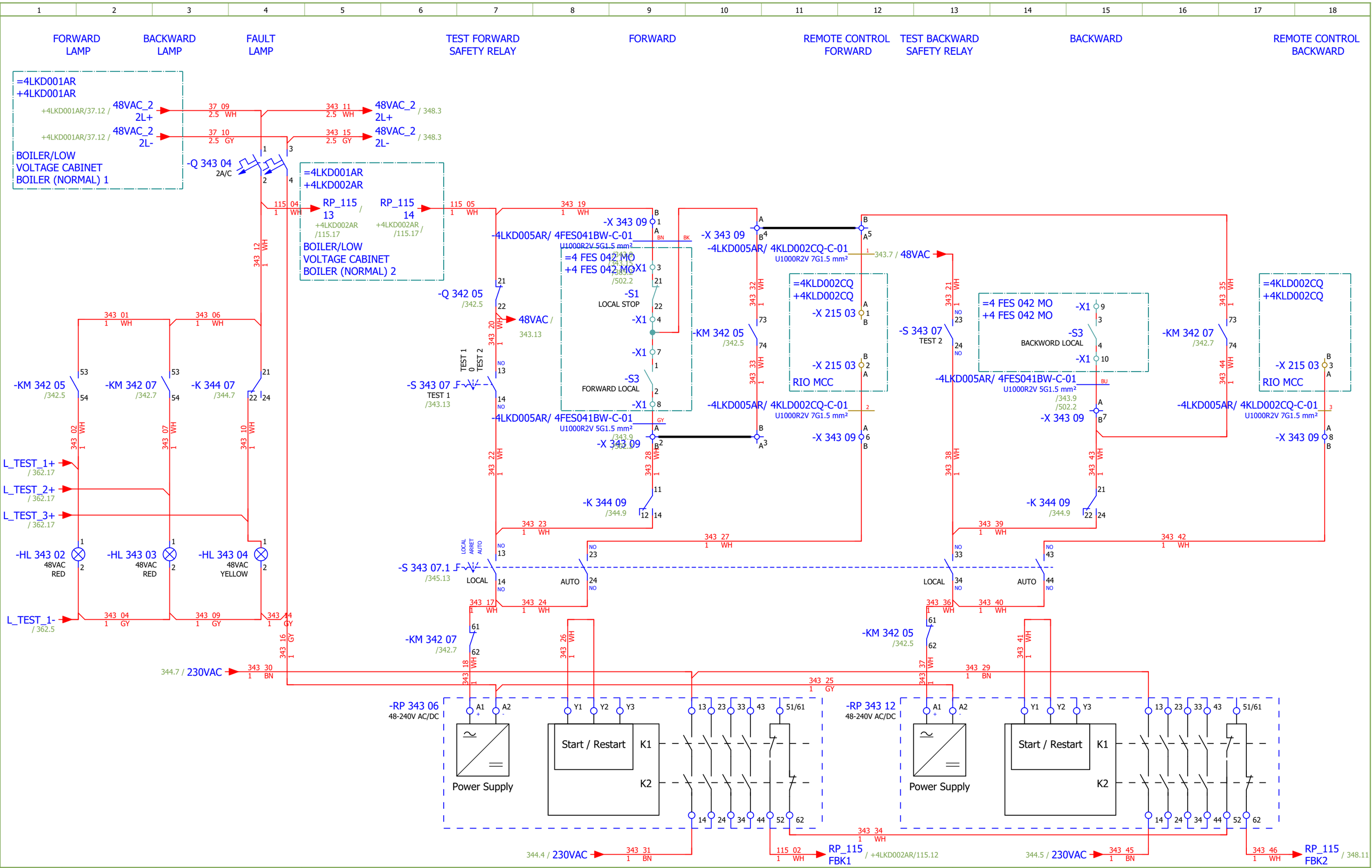

Date:	17.03.2026.	SINTAKSA A Voith Company	Client: ANDRITZ TEP d.o.o. Ulica 108. brigade ZNG 84, 35000 Slavonski Brod, Croatia	Scope: BOILER/LOW VOLTAGE CABINET BOILER (NORMAL) 5	Project: BRC-4	Unit & Issuer: ATEP0	Number: 1874	Revision: G	
Drawn:	Luka Božičević								#D
Approved:	Grga Kolić		Object: RDF Albioma Les Bois Rouge Reunion - France	Content: ASH CRUSHER BELOW SH 2 - CONTROL	Drawing designation: BRC-4-ATEP0-1874-G			=4LKD001AR	Sheet: 343
Format:	A3							+4LKD005AR	Next: 344

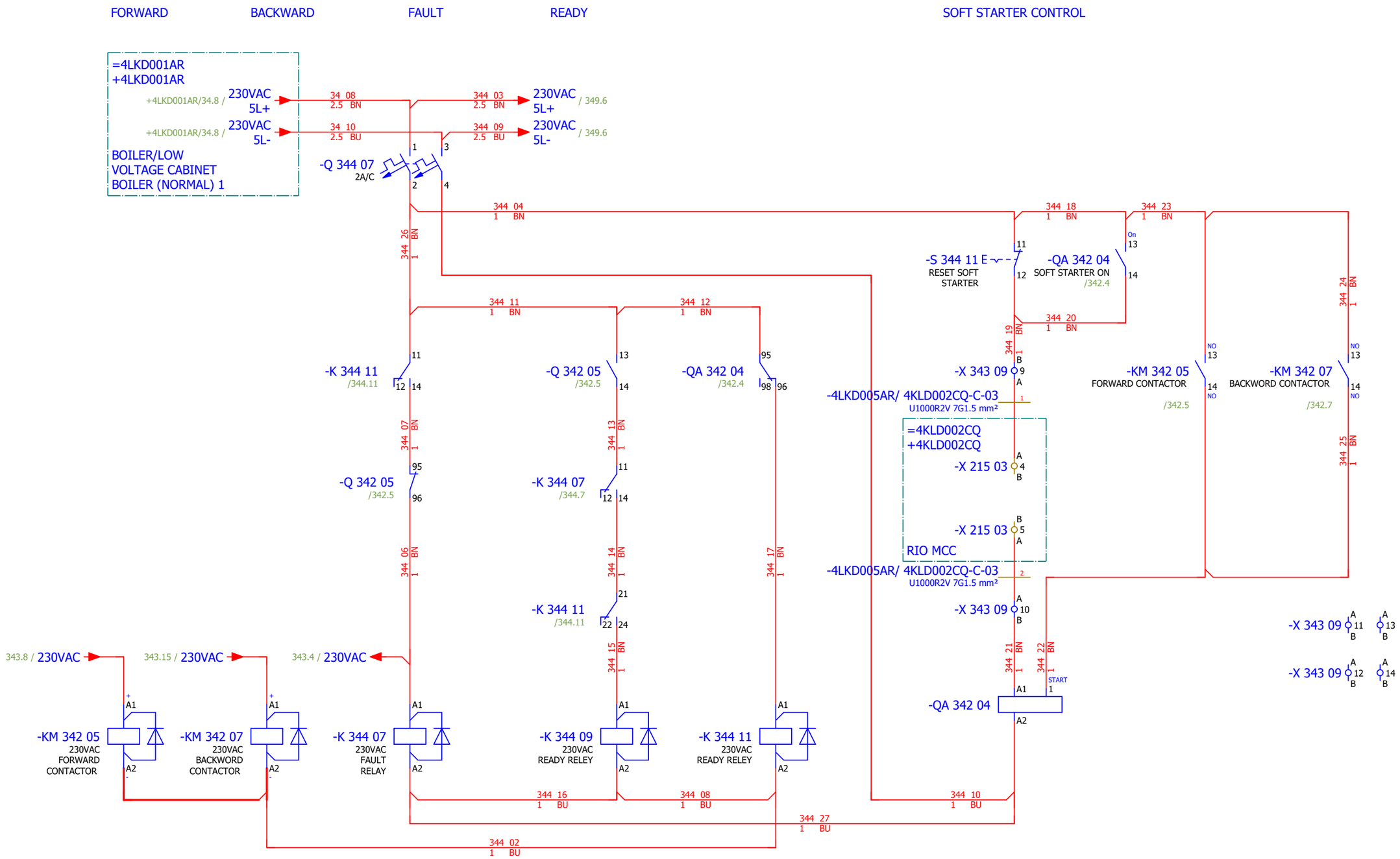

Date:	17.03.2026.	SINTAKSA A Voith Company	Client: ANDRITZ TEP d.o.o. Ulica 108. brigade ZNG 84, 35000 Slavonski Brod, Croatia	Scope: BOILER/LOW VOLTAGE CABINET BOILER (NORMAL) 5	Project: BRC-4	Unit & Issuer: ATEP0	Number: 1874	Revision: G
Drawn:	Luka Božičević							#D
Approved:	Grga Kolić		Object: RDF Albioma Les Bois Rouge Reunion - France	Content: ASH CRUSHER BELOW SH 2 - CONTROL	Drawing designation: BRC-4-ATEP0-1874-G		=4LKD001AR	Sheet: 344
Format:	A3						+4LKD005AR	Next: 345

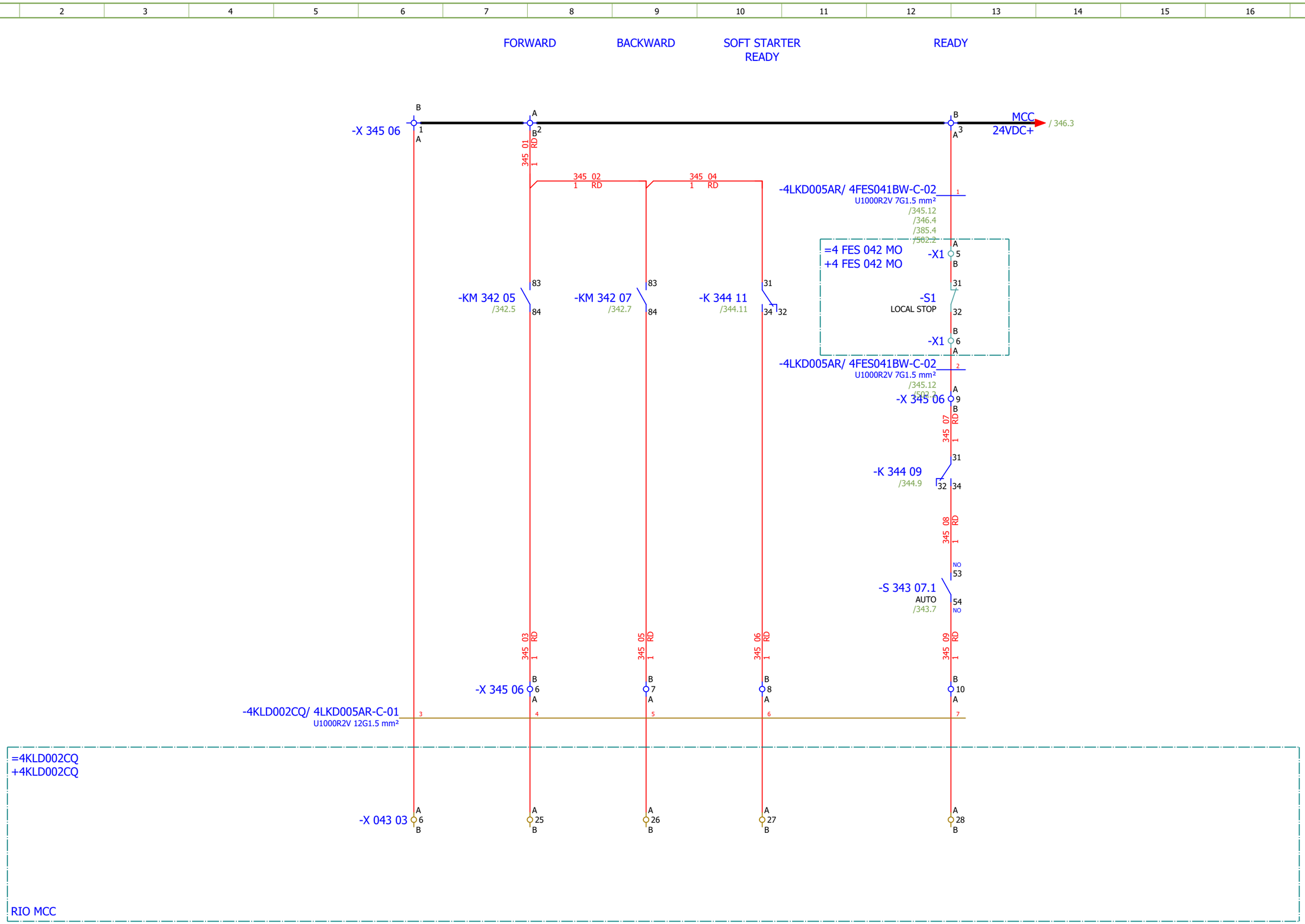

Date:	17.03.2026.	SINTAKSA A Voith Company	Client:	ANDRITZ TEP d.o.o. Ulica 108. brigade ZNG 84, 35000 Slavonski Brod, Croatia	Scope:	BOILER/LOW VOLTAGE CABINET BOILER (NORMAL) 5	Project: BRC-4	Unit & Issuer: ATEP0	Number: 1874	Revision: G
Drawn:	Luka Božičević									#D
Approved:	Grga Kolić		Object:	RDF Albioma Les Bois Rouge Reunion - France	Content:	ASH CRUSHER BELOW SH 2 - SIGNALIZATION	Drawing designation: BRC-4-ATEP0-1874-G			=4LKD001AR
Format:	A3									+4LKD005AR

Sheet: 345
Next: 346

BROYEUR DE CENDRES
SOUS LE SH 2 - "0" PULSE

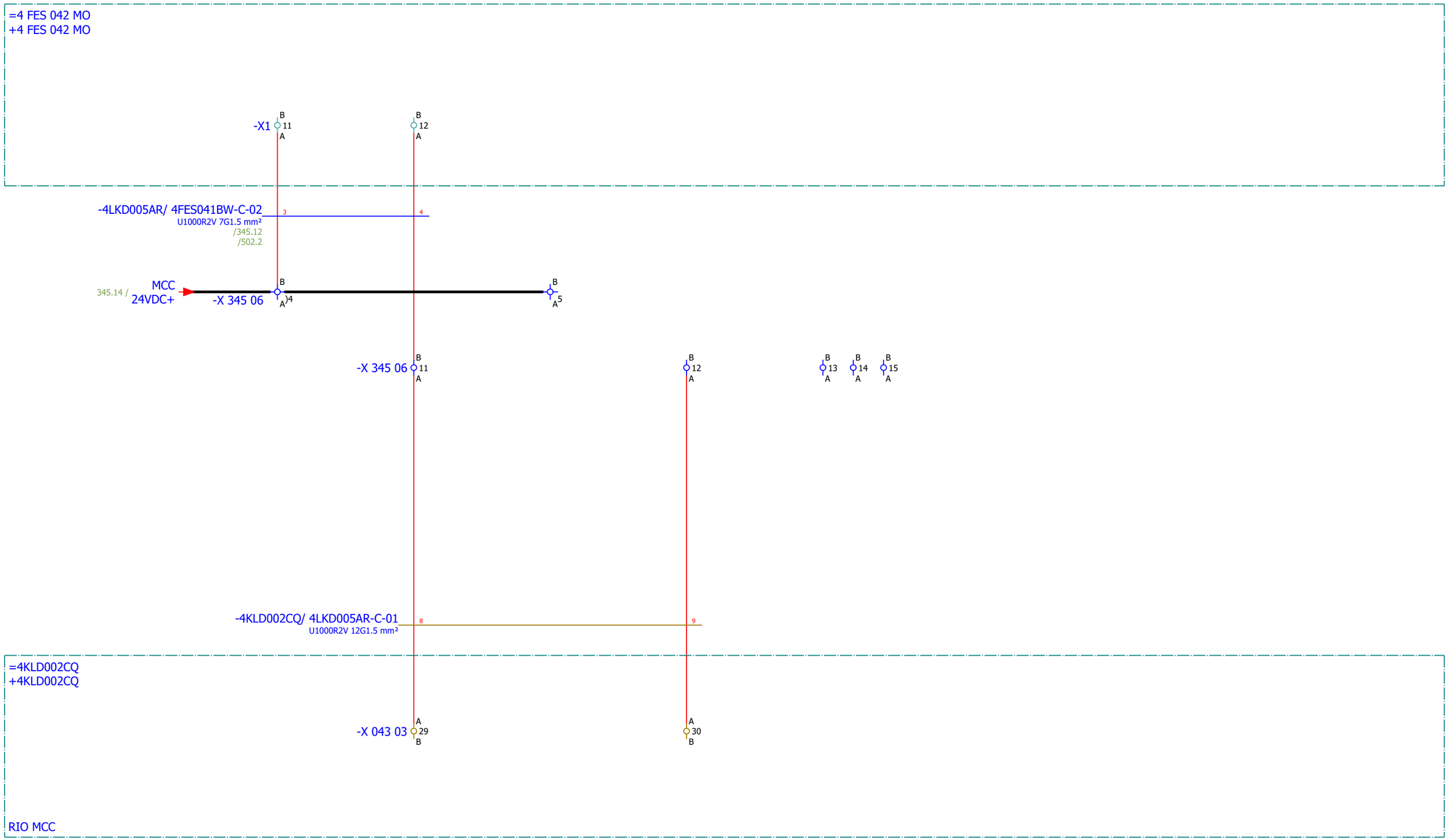

Date:	17.03.2026.	SINTAKSA A Voith Company	Client: ANDRITZ TEP d.o.o. Ulica 108. brigade ZNG 84, 35000 Slavonski Brod, Croatia	Scope: BOILER/LOW VOLTAGE CABINET BOILER (NORMAL) 5	Project: BRC-4	Unit & Issuer: ATEP0	Number: 1874	Revision: G	
Drawn:	Luka Božičević								#D
Approved:	Grga Kolić		Object: RDF Albioma Les Bois Rouge Reunion - France	Content: ASH CRUSHER BELOW SH 2 - SIGNALIZATION	Drawing designation: BRC-4-ATEP0-1874-G			=4LKD001AR	Sheet: 346
Format:	A3							+4LKD005AR	Next: 347

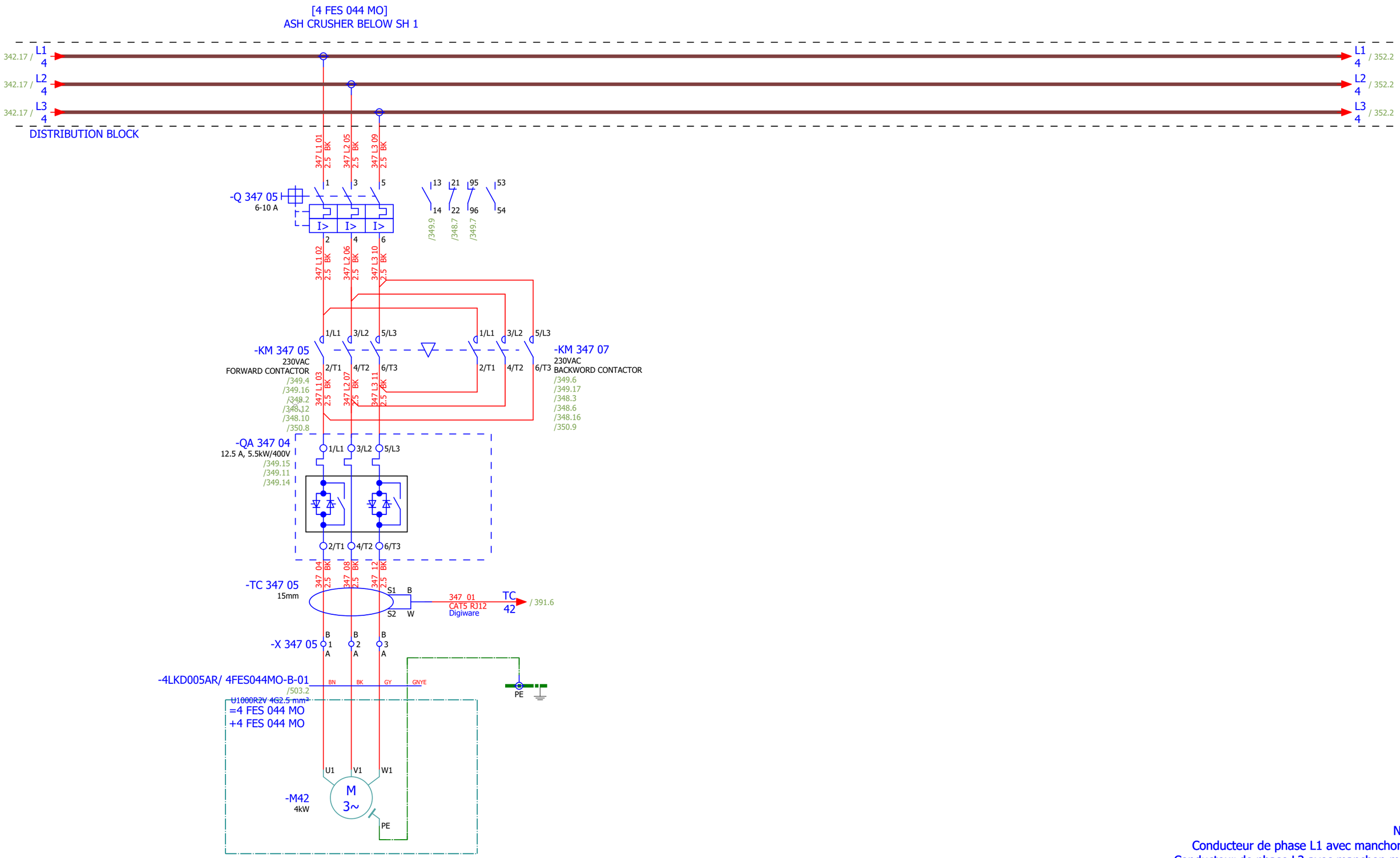

NOTE:
Conducteur de phase L1 avec manchon noir
Conducteur de phase L2 avec manchon marron
Conducteur de phase L3 avec manchon rouge

Date:	17.03.2026.	SINTAKSA A Voith Company	Client:	ANDRITZ TEP d.o.o. Ulica 108. brigade ZNG 84, 35000 Slavonski Brod, Croatia	Scope: BOILER/LOW VOLTAGE CABINET BOILER (NORMAL) 5	Project: BRC-4	Unit & Issuer: ATEP0	Number: 1874	Revision: G
Drawn:	Luka Božičević								#D
Approved:	Grga Kolić		Object:	RDF Albioma Les Bois Rouge Reunion - France	Content: ASH CRUSHER BELOW SH 1	Drawing designation: BRC-4-ATEP0-1874-G		=4LKD001AR	Sheet: 347
Format:	A3							+4LKD005AR	Next: 348

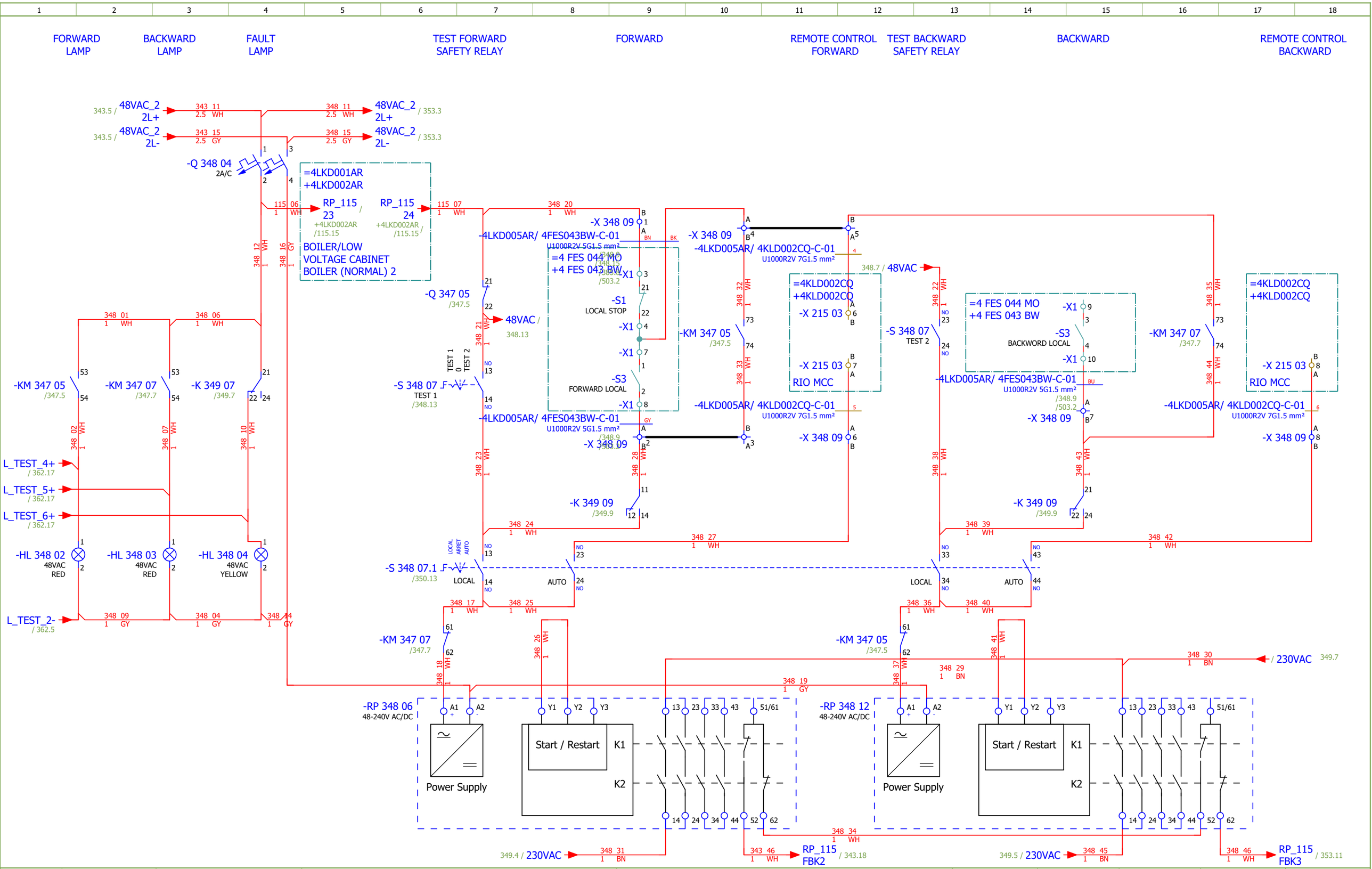

Date:	17.03.2026.	SINTAKSA A Voith Company	Client:	ANDRITZ TEP d.o.o. Ulica 108. brigade ZNG 84, 35000 Slavonski Brod, Croatia	Scope:	BOILER/LOW VOLTAGE CABINET BOILER (NORMAL) 5	Project: BRC-4	Unit & Issuer: ATEP0	Number: 1874	Revision: G	#D
Drawn:	Luka Božičević										
Approved:	Grga Kolić		Object:	RDF Albioma Les Bois Rouge Reunion - France	Content:	ASH CRUSHER BELOW SH 1 - CONTROL	Drawing designation: BRC-4-ATEP0-1874-G			=4LKD001AR	Sheet: 348
Format:	A3									+4LKD005AR	Next: 349

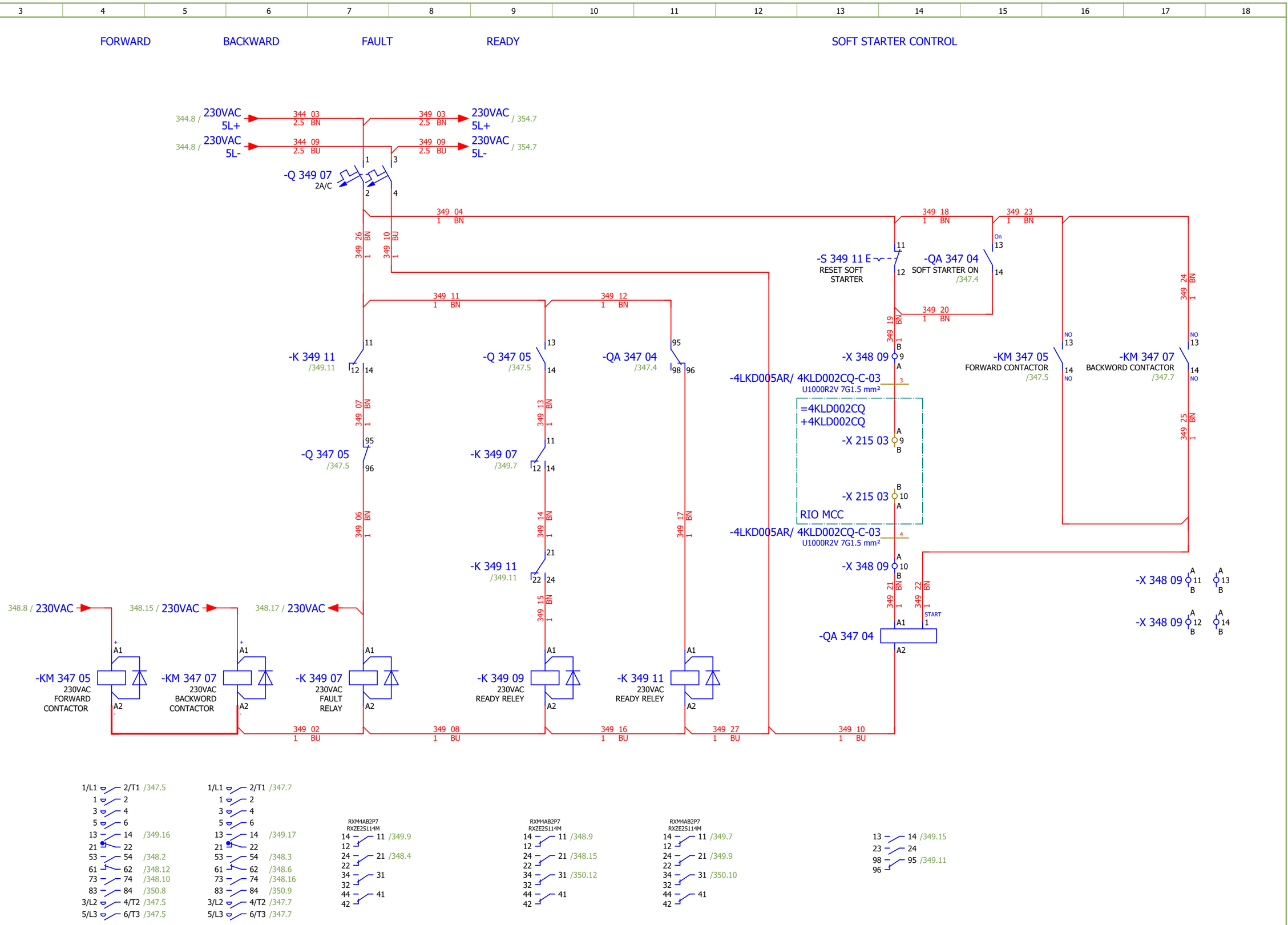

Date:	17.03.2026.	SINTAKSA A Voith Company	Client: ANDRITZ TEP d.o.o. Ulica 108. brigade ZNG 84, 35000 Slavonski Brod, Croatia	Scope: BOILER/LOW VOLTAGE CABINET BOILER (NORMAL) 5	Project: BRC-4	Unit & Issuer: ATEP0	Number: 1874	Revision: G	
Drawn:	Luka Božičević								#D
Approved:	Grga Kolić		Object: RDF Albioma Les Bois Rouge Reunion - France	Content: ASH CRUSHER BELOW SH 1 - CONTROL	Drawing designation: BRC-4-ATEP0-1874-G			=4LKD001AR	Sheet: 349
Format:	A3							+4LKD005AR	Next: 350

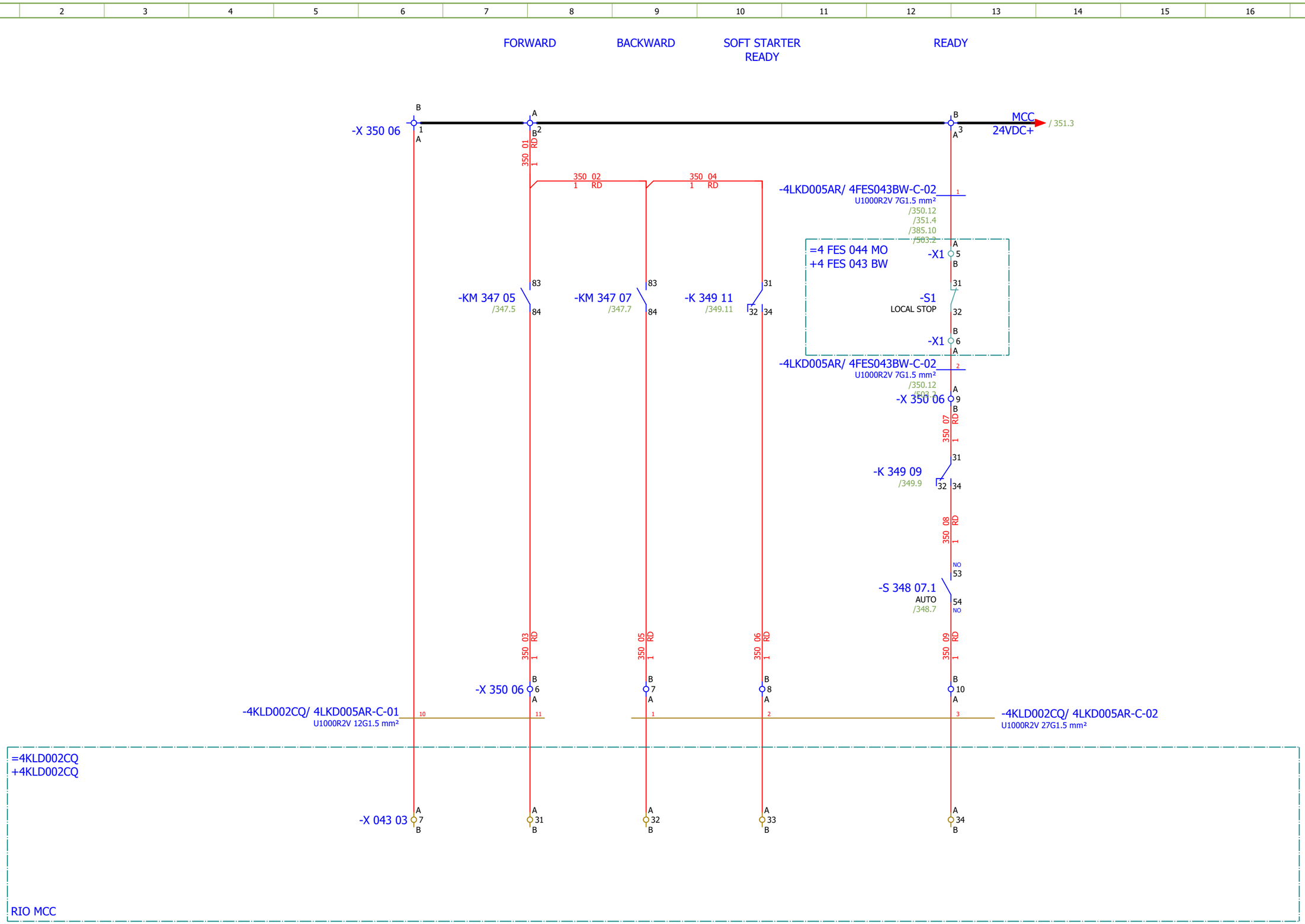

Date:	17.03.2026.	SINTAKSA A Voith Company	Client: ANDRITZ TEP d.o.o. Ulica 108. brigade ZNG 84, 35000 Slavonski Brod, Croatia	Scope: BOILER/LOW VOLTAGE CABINET BOILER (NORMAL) 5	Project: BRC-4	Unit & Issuer: ATEP0	Number: 1874	Revision: G	
Drawn:	Luka Božičević								#D
Approved:	Grga Kolić		Object: RDF Albioma Les Bois Rouge Reunion - France	Content: ASH CRUSHER BELOW SH 1 - SIGNALIZATION	Drawing designation: BRC-4-ATEP0-1874-G			=4LKD001AR	Sheet: 350
Format:	A3							+4LKD005AR	Next: 351

ASH CRUSHER BELOW SH 1
- "0" PULSE

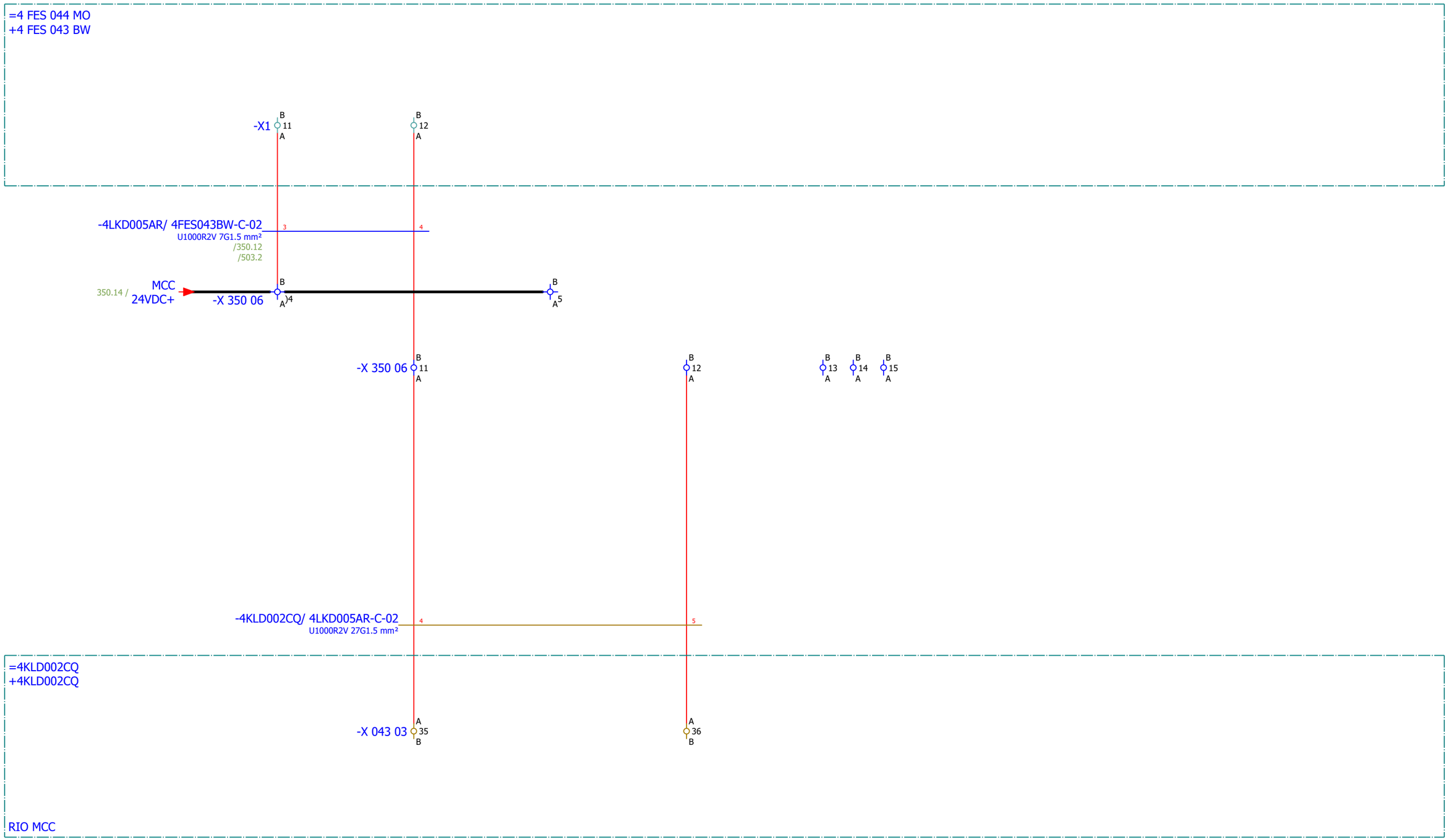

Date:	17.03.2026.	SINTAKSA A Voith Company	Client:	ANDRITZ TEP d.o.o. Ulica 108. brigade ZNG 84, 35000 Slavonski Brod, Croatia	Scope: BOILER/LOW VOLTAGE CABINET BOILER (NORMAL) 5	Project: BRC-4	Unit & Issuer: ATEP0	Number: 1874	Revision: G
Drawn:	Luka Božičević								#D
Approved:	Grga Kolić		Object:	RDF Albioma Les Bois Rouge Reunion - France	Content: ASH CRUSHER BELOW SH 1 - SIGNALIZATION	Drawing designation: BRC-4-ATEP0-1874-G		=4LKD001AR	Sheet: 351
Format:	A3							+4LKD005AR	Next: 352

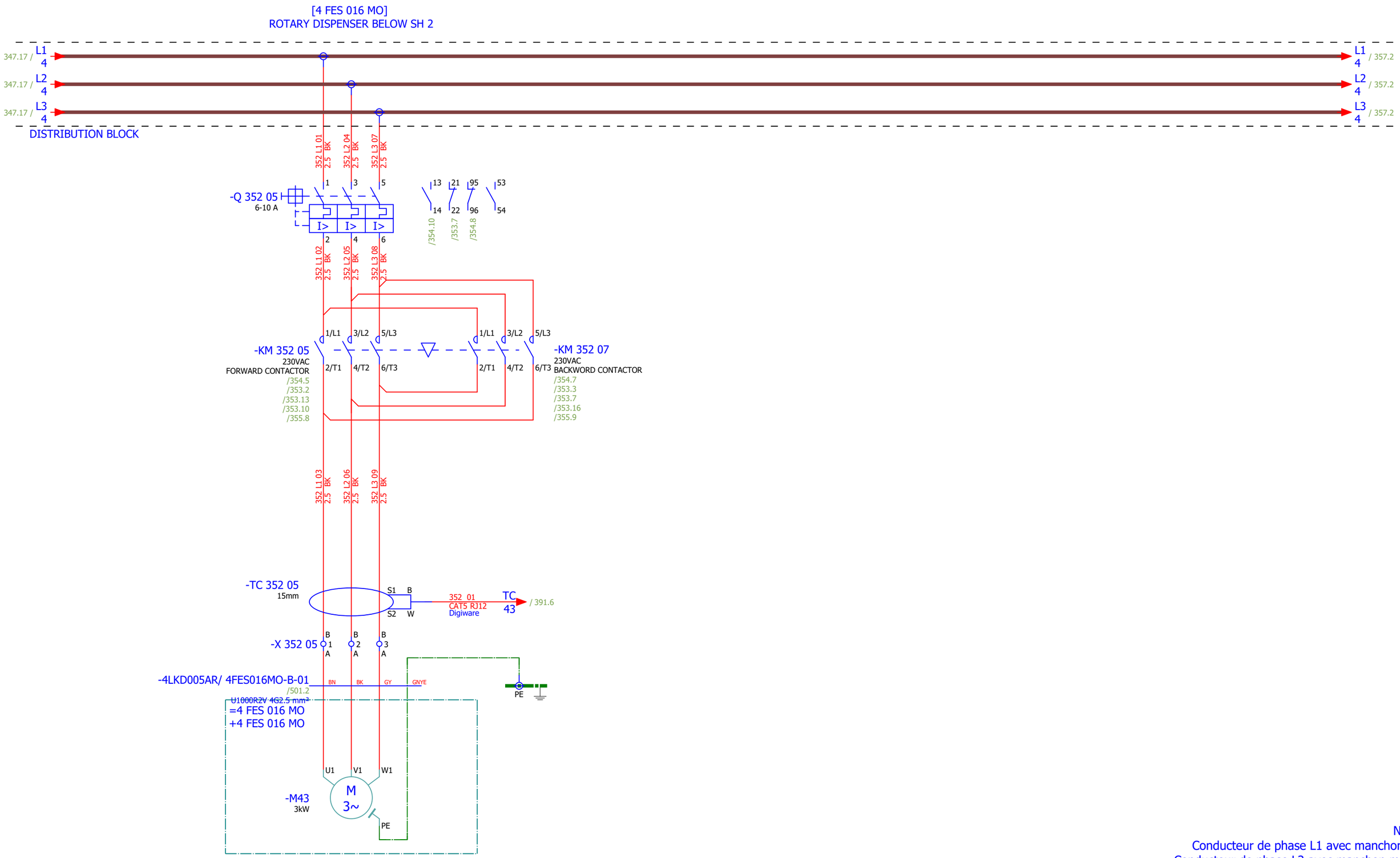

NOTE:
Conducteur de phase L1 avec manchon noir
Conducteur de phase L2 avec manchon marron
Conducteur de phase L3 avec manchon rouge

Date:	17.03.2026.	SINTAKSA A Voith Company	Client:	ANDRITZ TEP d.o.o. Ulica 108. brigade ZNG 84, 35000 Slavonski Brod, Croatia	Scope: BOILER/LOW VOLTAGE CABINET BOILER (NORMAL) 5	Project: BRC-4	Unit & Issuer: ATEP0	Number: 1874	Revision: G
Drawn:	Luka Božičević								#D
Approved:	Grga Kolić		Object:	RDF Albioma Les Bois Rouge Reunion - France	Content: ROTARY DISPENSER BELOW SH 2	Drawing designation: BRC-4-ATEP0-1874-G		=4LKD001AR	Sheet: 352
Format:	A3							+4LKD005AR	Next: 353

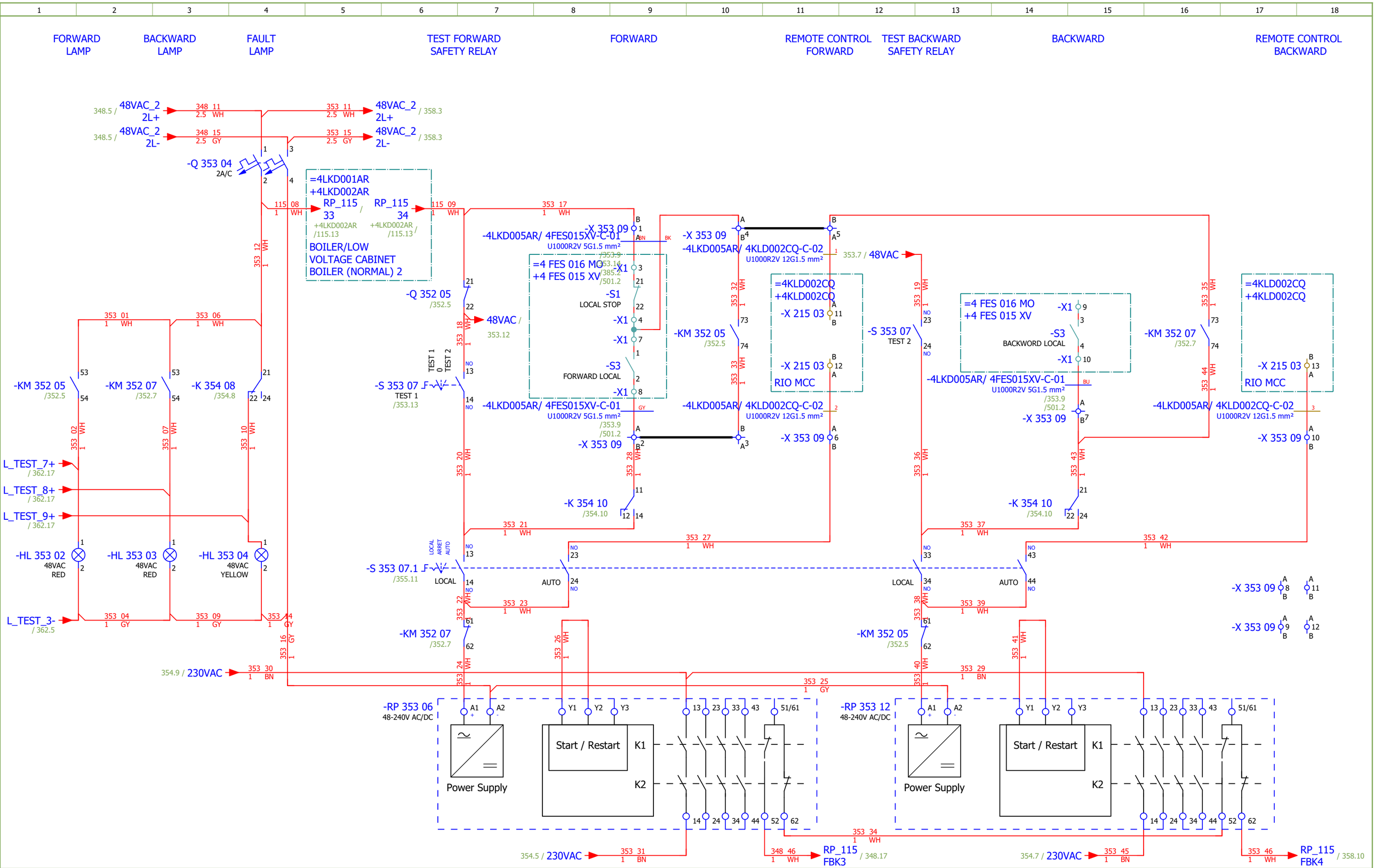

Date:	17.03.2026.	SINTAKSA A Voith Company	Client:	ANDRITZ TEP d.o.o. Ulica 108. brigade ZNG 84, 35000 Slavonski Brod, Croatia	Scope:	BOILER/LOW VOLTAGE CABINET BOILER (NORMAL) 5	Project: BRC-4	Unit & Issuer: ATEP0	Number: 1874	Revision: G	#D
Drawn:	Luka Božičević										
Approved:	Grga Kolić		Object:	RDF Albioma Les Bois Rouge Reunion - France	Content:	ROTARY DISPENSER BELOW SH 2 - CONTROL	Drawing designation: BRC-4-ATEP0-1874-G			=4LKD001AR	Sheet: 353
Format:	A3									+4LKD005AR	Next: 354

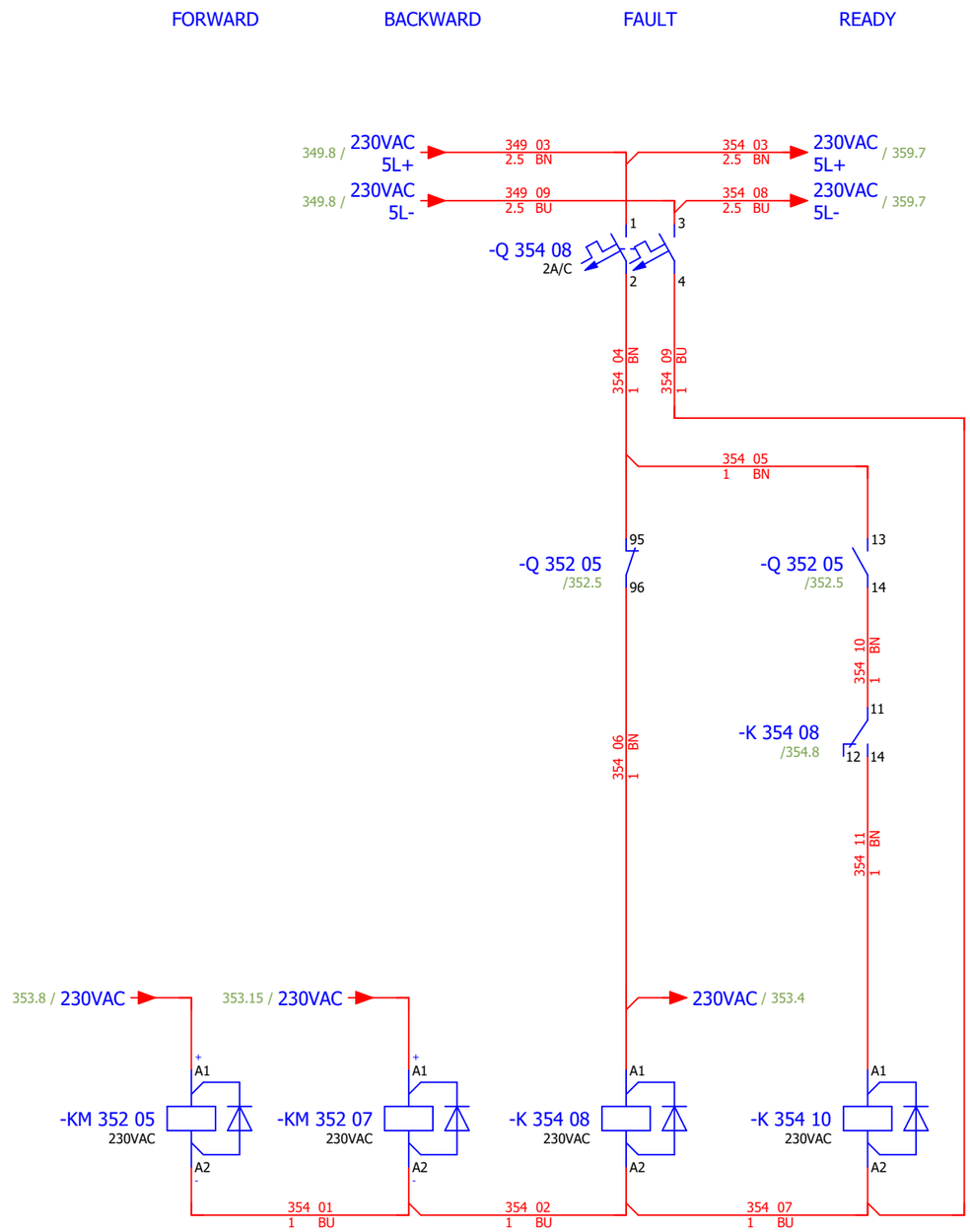

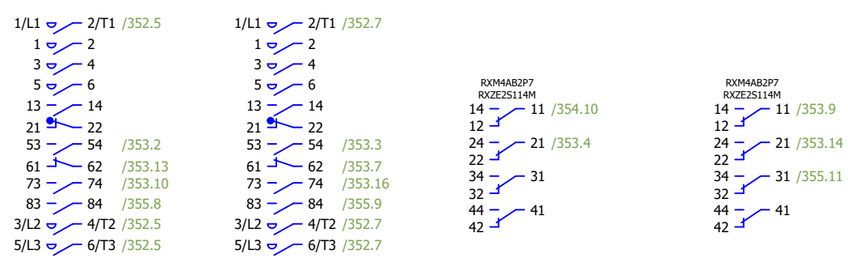

Date:	17.03.2026.	SINTAKSA A Voith Company	Client: ANDRITZ TEP d.o.o. Ulica 108. brigade ZNG 84, 35000 Slavonski Brod, Croatia	Scope: BOILER/LOW VOLTAGE CABINET BOILER (NORMAL) 5	Project: BRC-4	Unit & Issuer: ATEP0	Number: 1874	Revision: G	
Drawn:	Luka Božičević								#D
Approved:	Grga Kolić		Object: RDF Albioma Les Bois Rouge Reunion - France	Content: ROTARY DISPENSER BELOW SH 2 - CONTROL	Drawing designation: BRC-4-ATEP0-1874-G			=4LKD001AR	Sheet: 354
Format:	A3							+4LKD005AR	Next: 355

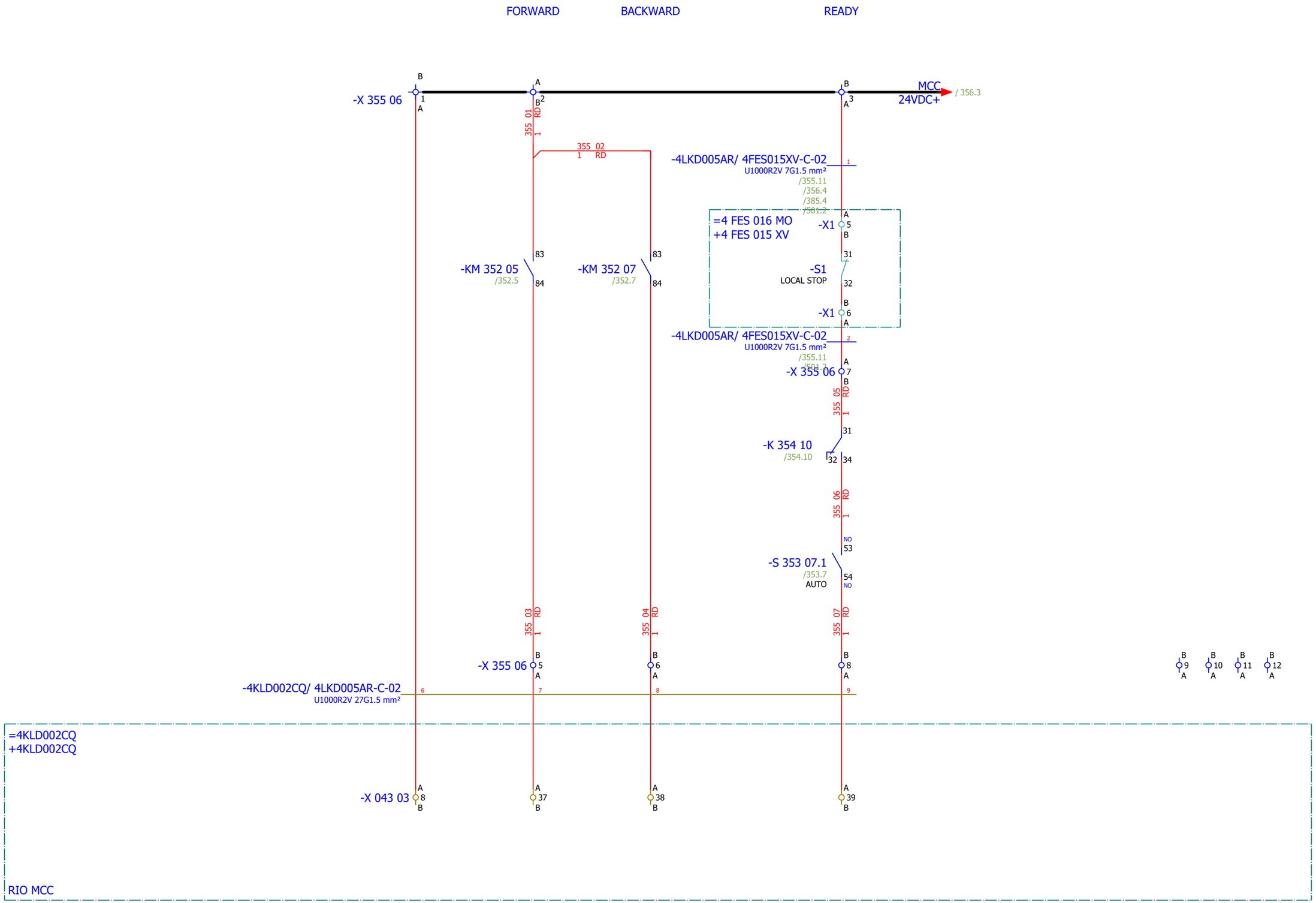

Date:	17.03.2026.	SINTAKSA A Voith Company	Client:	ANDRITZ TEP d.o.o. Ulica 108. brigade ZNG 84, 35000 Slavonski Brod, Croatia	Scope:	BOILER/LOW VOLTAGE CABINET BOILER (NORMAL) 5	Project: BRC-4	Unit & Issuer: ATEP0	Number: 1874	Revision: G
Drawn:	Luka Božičević									#D
Approved:	Grga Kolić		Object:	RDF Albioma Les Bois Rouge Reunion - France	Content:	ROTARY DISPENSER BELOW SH 2 - SIGNALIZATION	Drawing designation: BRC-4-ATEP0-1874-G			=4LKD001AR
Format:	A3									+4LKD005AR

Sheet: 355
Next: 356

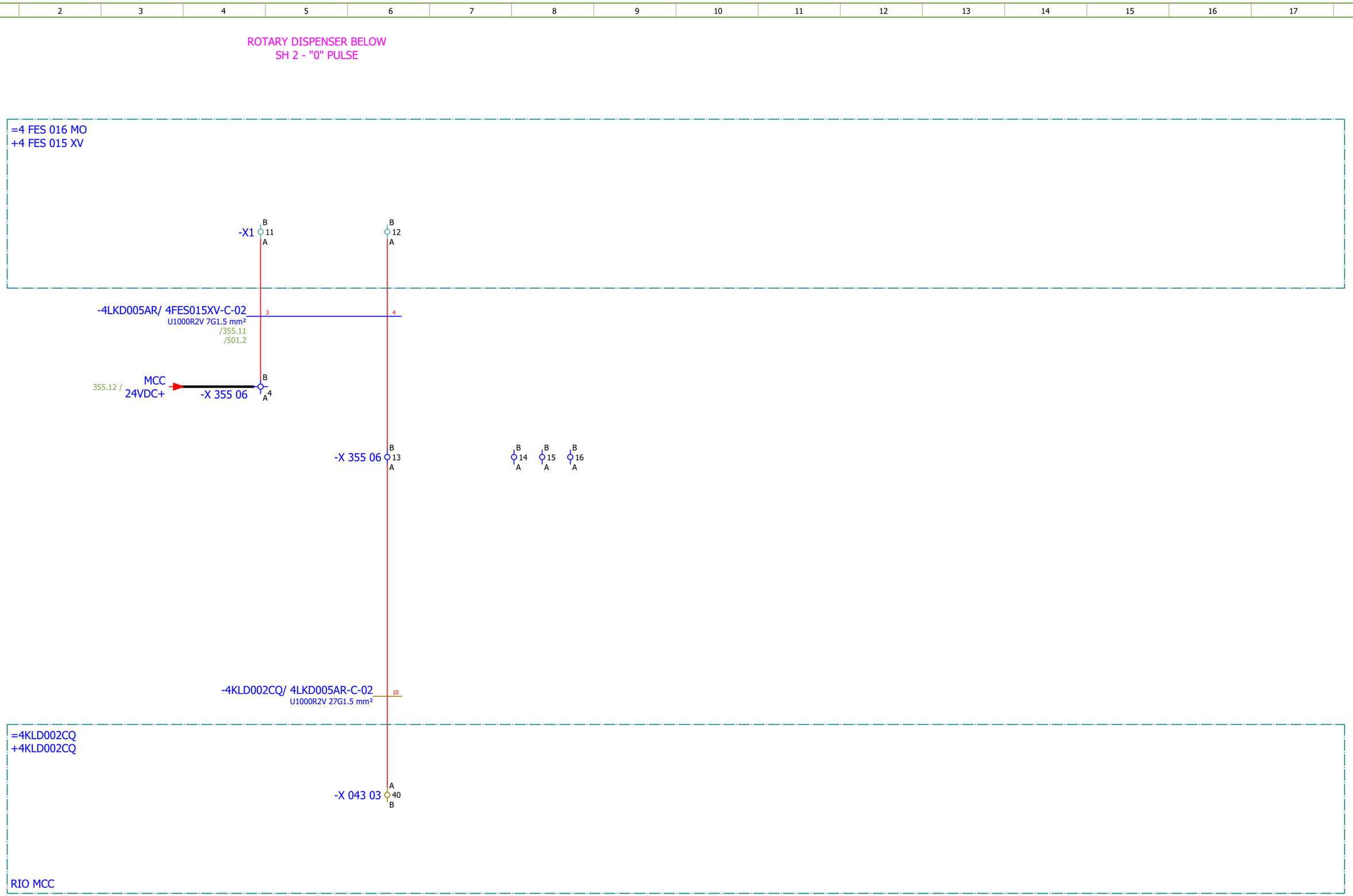

Date:	17.03.2026.	SINTAKSA A Voith Company	Client:	ANDRITZ TEP d.o.o. Ulica 108. brigade ZNG 84, 35000 Slavonski Brod, Croatia	Scope: BOILER/LOW VOLTAGE CABINET BOILER (NORMAL) 5	Project: BRC-4	Unit & Issuer: ATEP0	Number: 1874	Revision: G
Drawn:	Luka Božičević								#D
Approved:	Grga Kolić		Object:	RDF Albioma Les Bois Rouge Reunion - France	Content: ROTARY DISPENSER BELOW SH 2 - SIGNALIZATION	Drawing designation: BRC-4-ATEP0-1874-G			=4LKD001AR
Format:	A3								+4LKD005AR

Sheet: 356
Next: 357

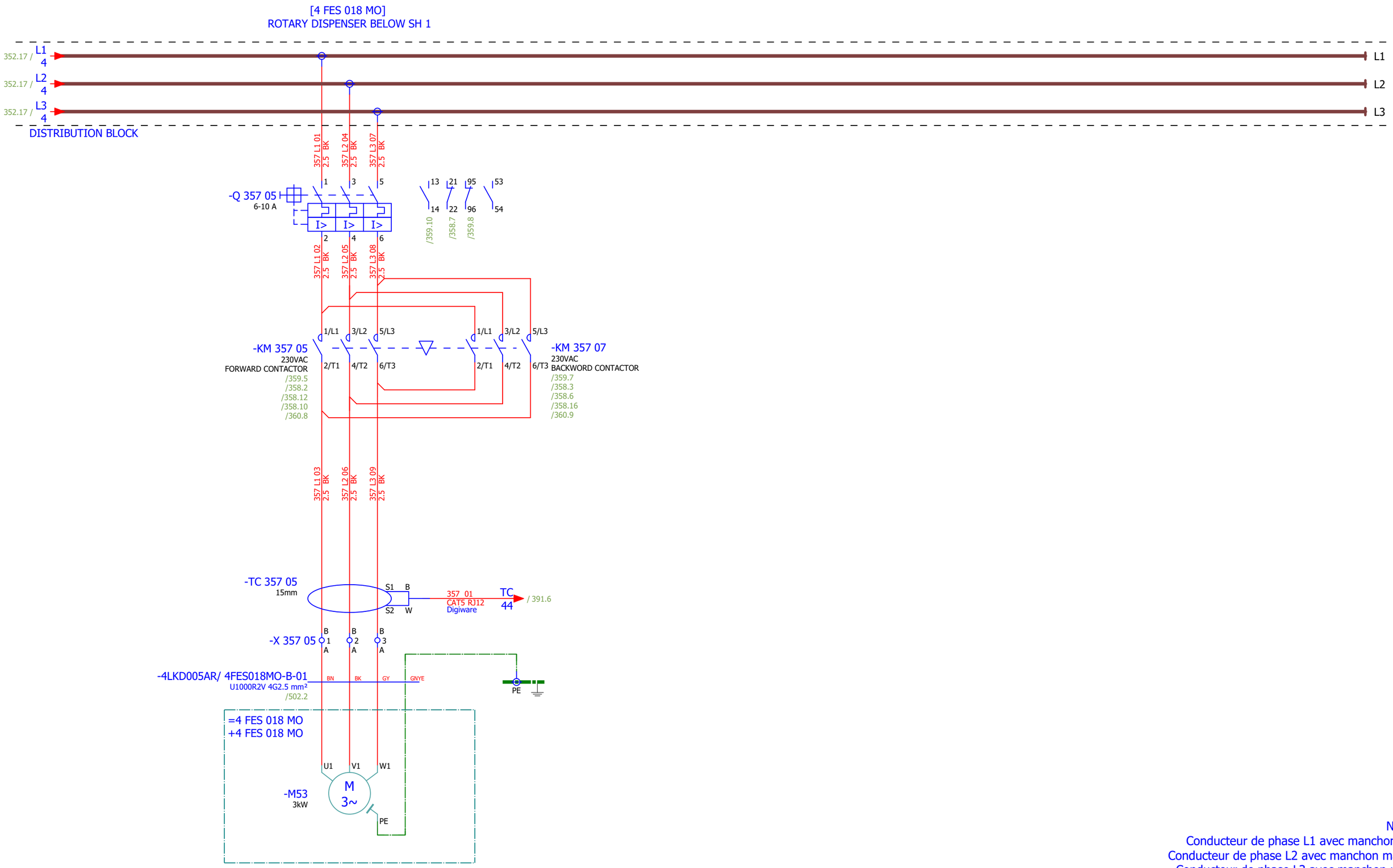

NOTE:
Conducteur de phase L1 avec manchon noir
Conducteur de phase L2 avec manchon marron
Conducteur de phase L3 avec manchon rouge

Date:	17.03.2026.	SINTAKSA A Voith Company	Client:	ANDRITZ TEP d.o.o. Ulica 108. brigade ZNG 84, 35000 Slavonski Brod, Croatia	Scope: BOILER/LOW VOLTAGE CABINET BOILER (NORMAL) 5	Project: BRC-4	Unit & Issuer: ATEP0	Number: 1874	Revision: G
Drawn:	Luka Božičević								#D
Approved:	Grga Kolić		Object:	RDF Albioma Les Bois Rouge Reunion - France	Content: ROTARY DISPENSER BELOW SH 1	Drawing designation: BRC-4-ATEP0-1874-G		=4LKD001AR	Sheet: 357
Format:	A3							+4LKD005AR	Next: 358

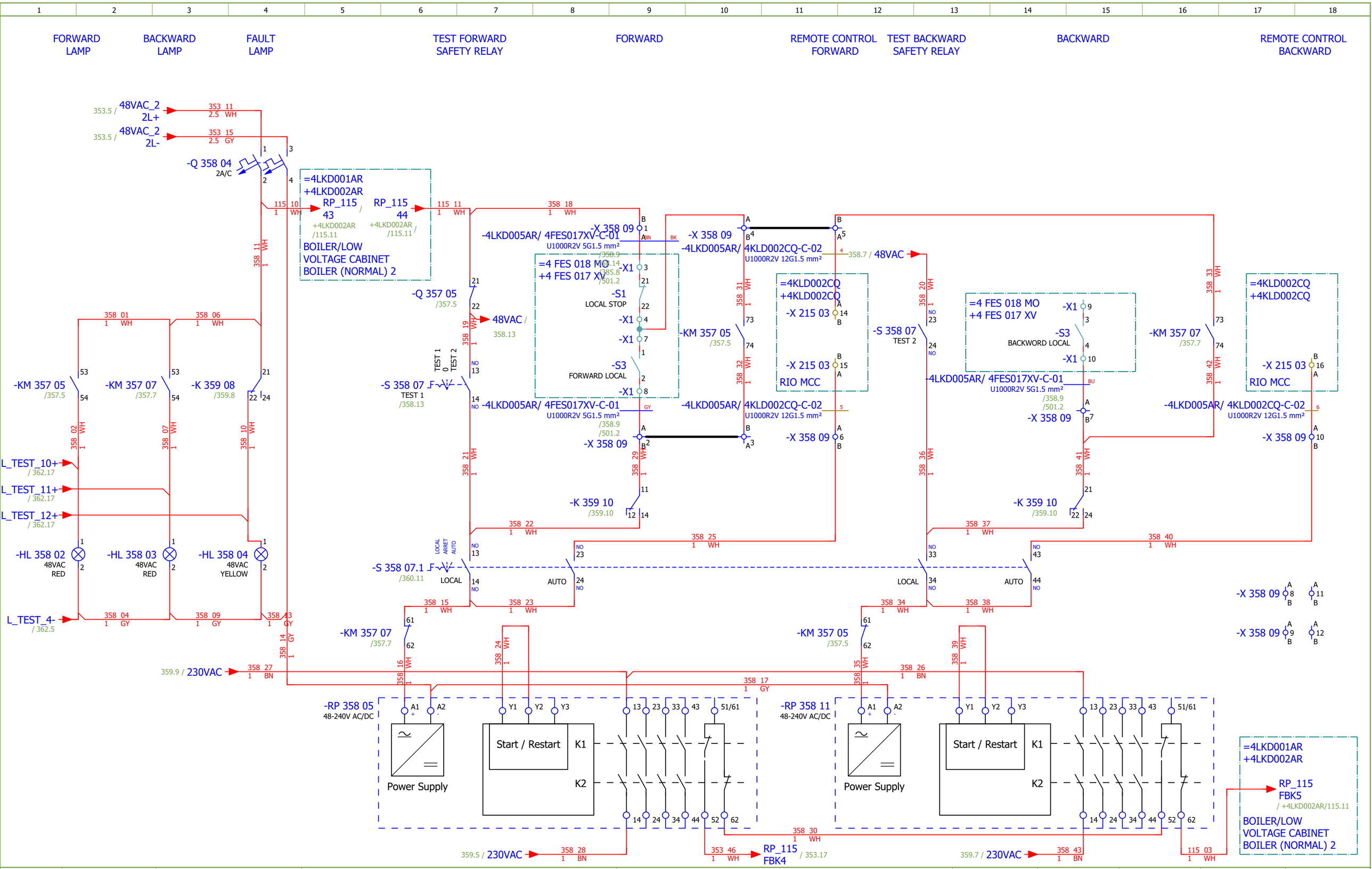

Date:	17.03.2026.	SINTAKSA A Voith Company	Client: ANDRITZ TEP d.o.o. Ulica 108. brigade ZNG 84, 35000 Slavonski Brod, Croatia	Scope: BOILER/LOW VOLTAGE CABINET BOILER (NORMAL) 5	Project: BRC-4	Unit & Issuer: ATEP0	Number: 1874	Revision: G	
Drawn:	Luka Božičević								#D
Approved:	Grga Kolić		Object: RDF Albioma Les Bois Rouge Reunion - France	Content: ROTARY DISPENSER BELOW SH 1 - CONTROL	Drawing designation: BRC-4-ATEP0-1874-G			=4LKD001AR	Sheet: 358
Format:	A3							+4LKD005AR	Next: 359

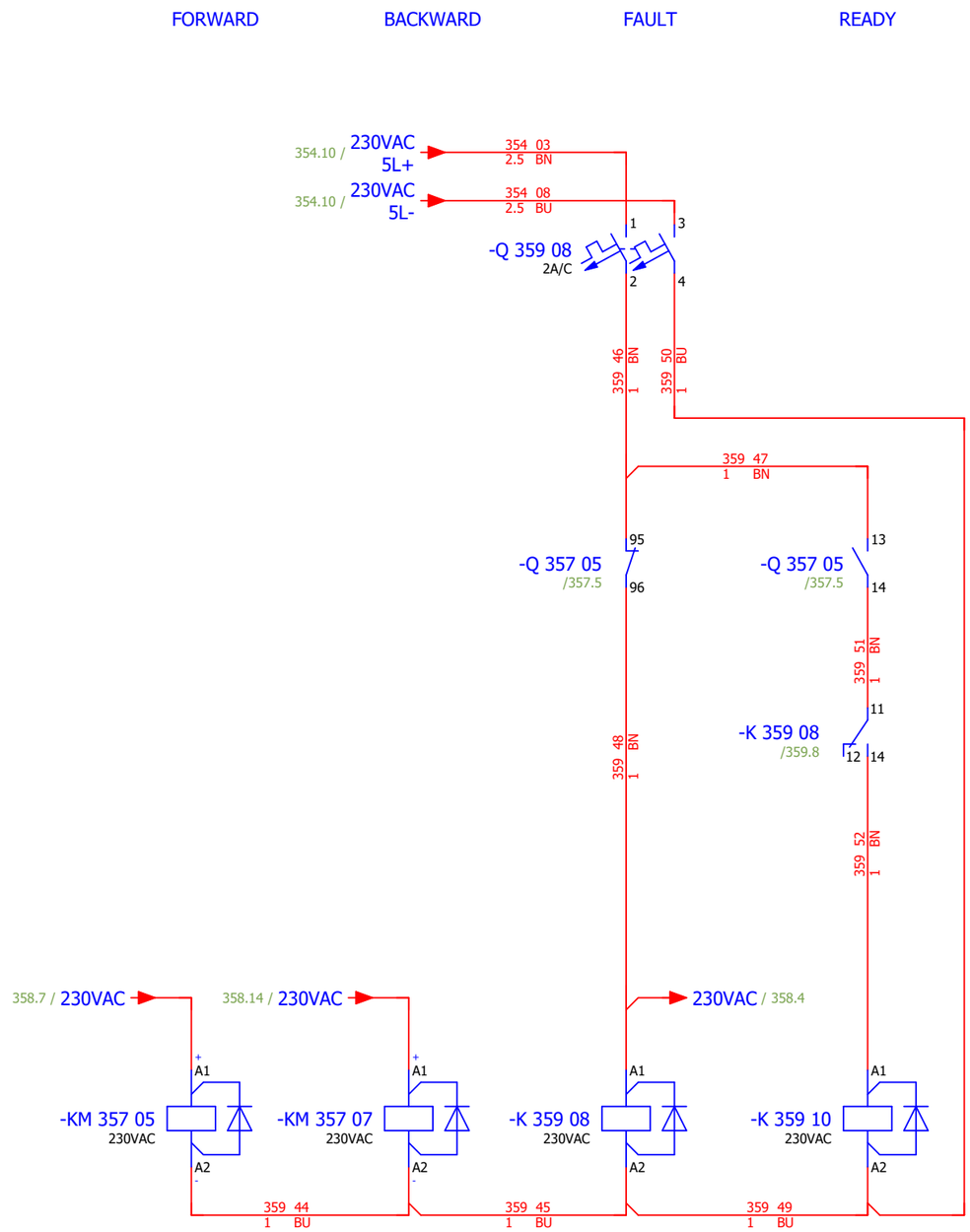

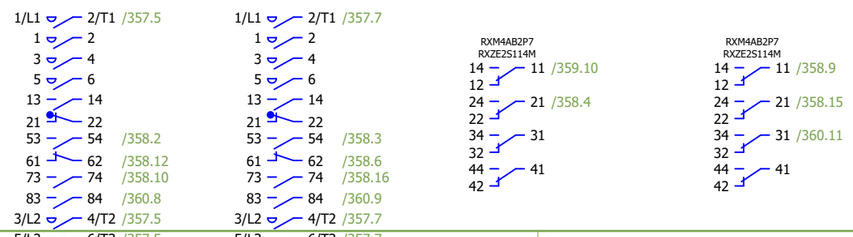

Date:	17.03.2026.	SINTAKSA A Voith Company	Client: ANDRITZ TEP d.o.o. Ulica 108. brigade ZNG 84, 35000 Slavonski Brod, Croatia	Scope: BOILER/LOW VOLTAGE CABINET BOILER (NORMAL) 5	Project: BRC-4	Unit & Issuer: ATEP0	Number: 1874	Revision: G	
Drawn:	Luka Božičević								#D
Approved:	Grga Kolić		Object: RDF Albioma Les Bois Rouge Reunion - France	Content: ROTARY DISPENSER BELOW SH 1 - CONTROL	Drawing designation: BRC-4-ATEP0-1874-G			=4LKD001AR	Sheet: 359
Format:	A3							+4LKD005AR	Next: 360

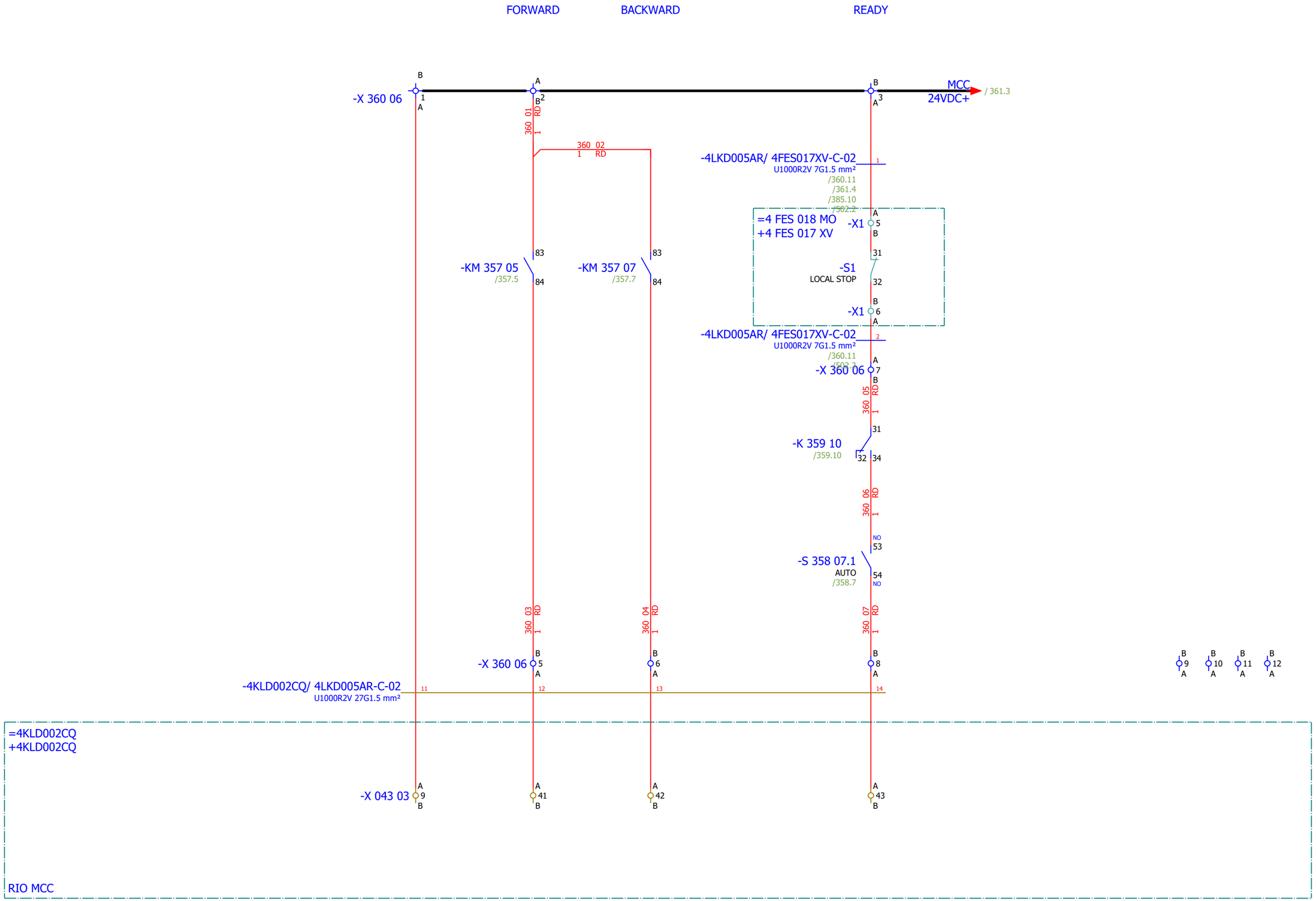

Date:	17.03.2026.	SINTAKSA A Voith Company	Client:	ANDRITZ TEP d.o.o. Ulica 108. brigade ZNG 84, 35000 Slavonski Brod, Croatia	Scope:	BOILER/LOW VOLTAGE CABINET BOILER (NORMAL) 5	Project: BRC-4	Unit & Issuer: ATEP0	Number: 1874	Revision: G
Drawn:	Luka Božičević									#D
Approved:	Grga Kolić		Object:	RDF Albioma Les Bois Rouge Reunion - France	Content:	ROTARY DISPENSER BELOW SH 1 - SIGNALIZATION	Drawing designation: BRC-4-ATEP0-1874-G			=4LKD001AR
Format:	A3									+4LKD005AR

Sheet: 360
Next: 361

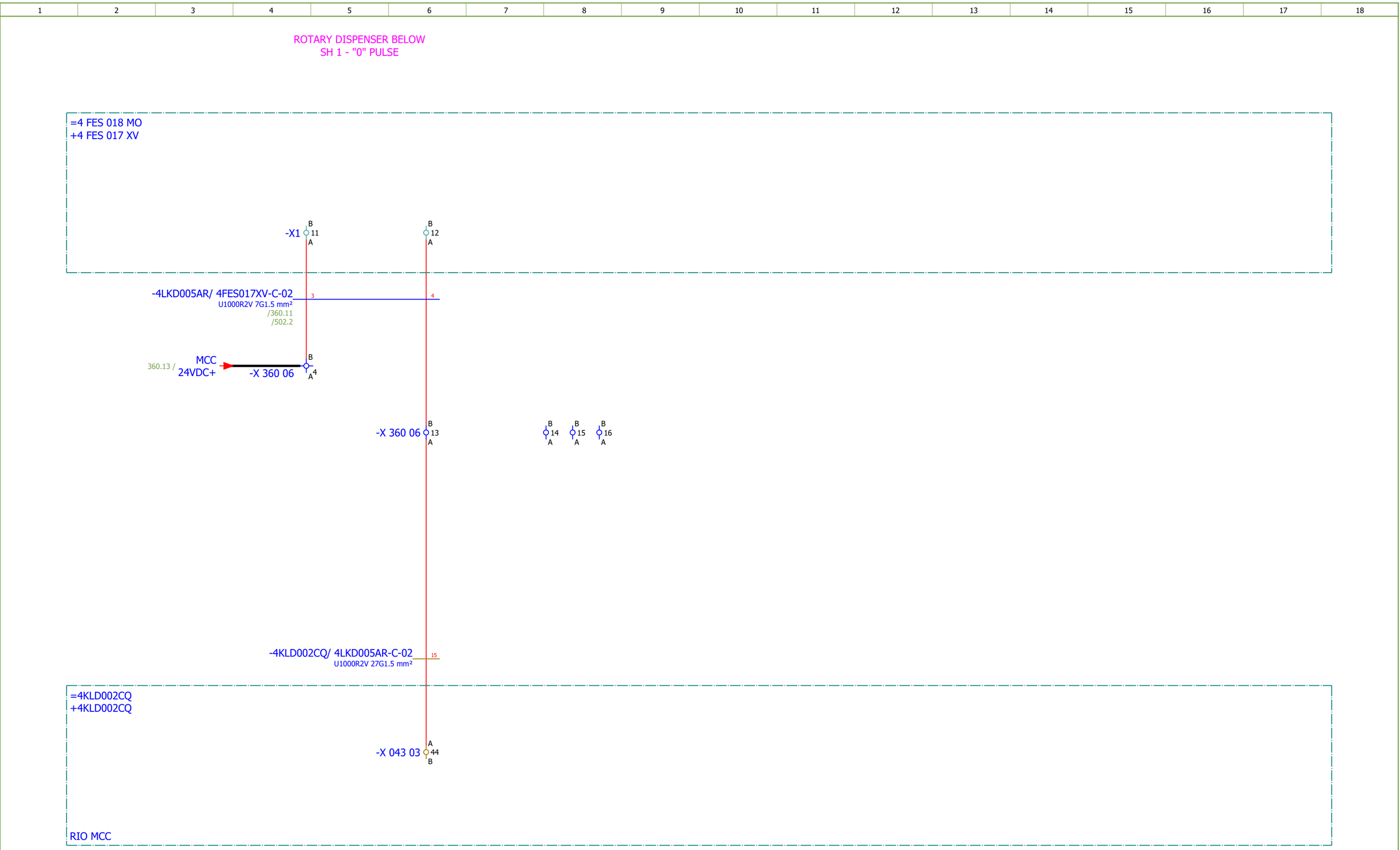

Date:	17.03.2026.	SINTAKSA A Voith Company	Client:	ANDRITZ TEP d.o.o. Ulica 108. brigade ZNG 84, 35000 Slavonski Brod, Croatia	Scope: BOILER/LOW VOLTAGE CABINET BOILER (NORMAL) 5	Project: BRC-4	Unit & Issuer: ATEP0	Number: 1874	Revision: G
Drawn:	Luka Božičević								#D
Approved:	Grga Kolić		Object:	RDF Albioma Les Bois Rouge Reunion - France	Content: ROTARY DISPENSER BELOW SH 1 - SIGNALIZATION	Drawing designation: BRC-4-ATEP0-1874-G		=4LKD001AR	Sheet: 361
Format:	A3							+4LKD005AR	Next: 362

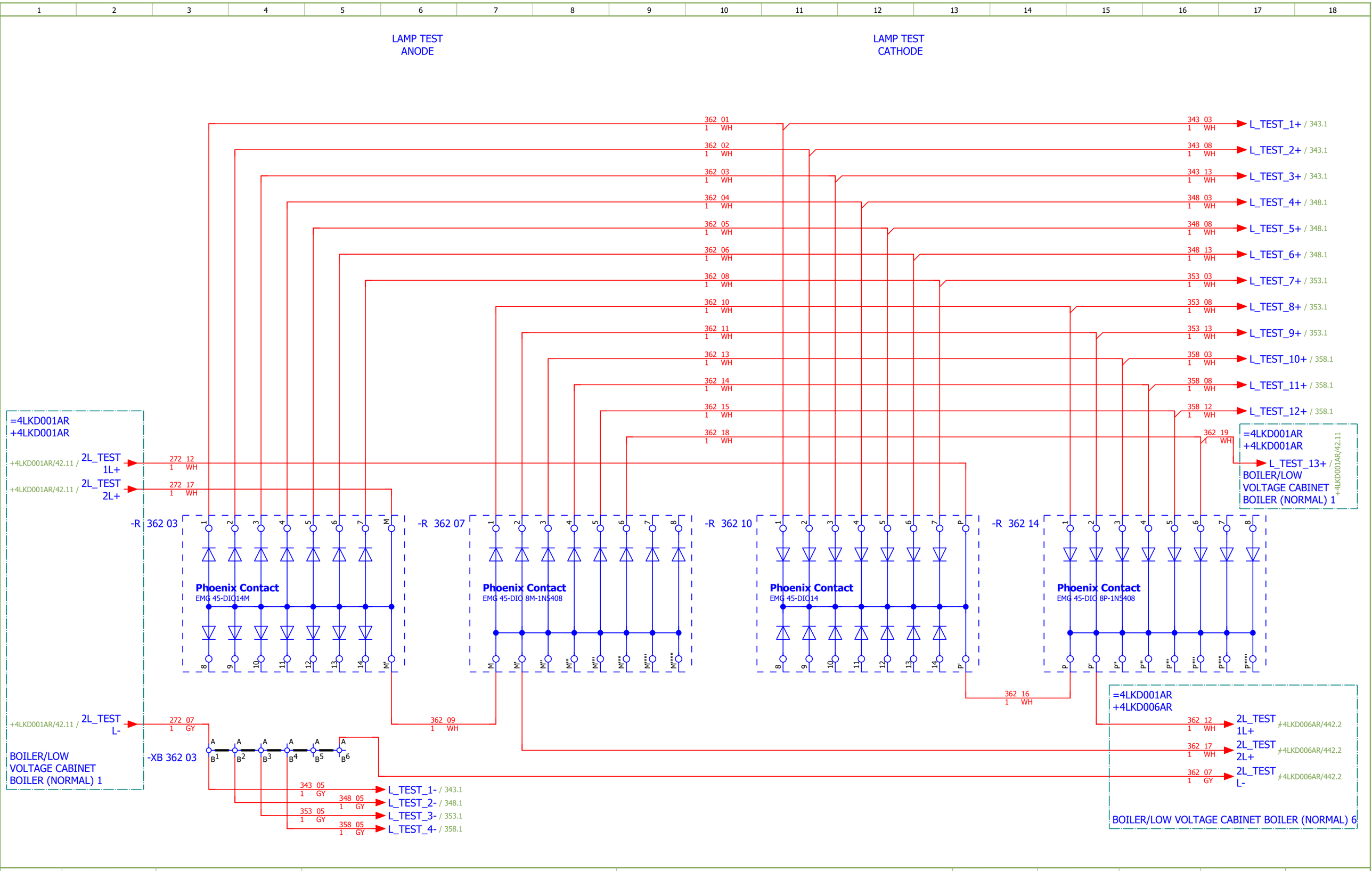

Date:	17.03.2026.	SINTAKSA A Voith Company	Client: ANDRITZ TEP d.o.o. Ulica 108. brigade ZNG 84, 35000 Slavonski Brod, Croatia	Scope: BOILER/LOW VOLTAGE CABINET BOILER (NORMAL) 5	Project: BRC-4	Unit & Issuer: ATEP0	Number: 1874	Revision: G	#D
Drawn:	Luka Božičević								
Approved:	Grga Kolić		Object: RDF Albioma Les Bois Rouge Reunion - France	Content: LAMP TEST	Drawing designation: BRC-4-ATEP0-1874-G			=4LKD001AR	Sheet: 362
Format:	A3							+4LKD005AR	Next: 381

NORMAL POWERED MCC -
SECTION 5 CB ON

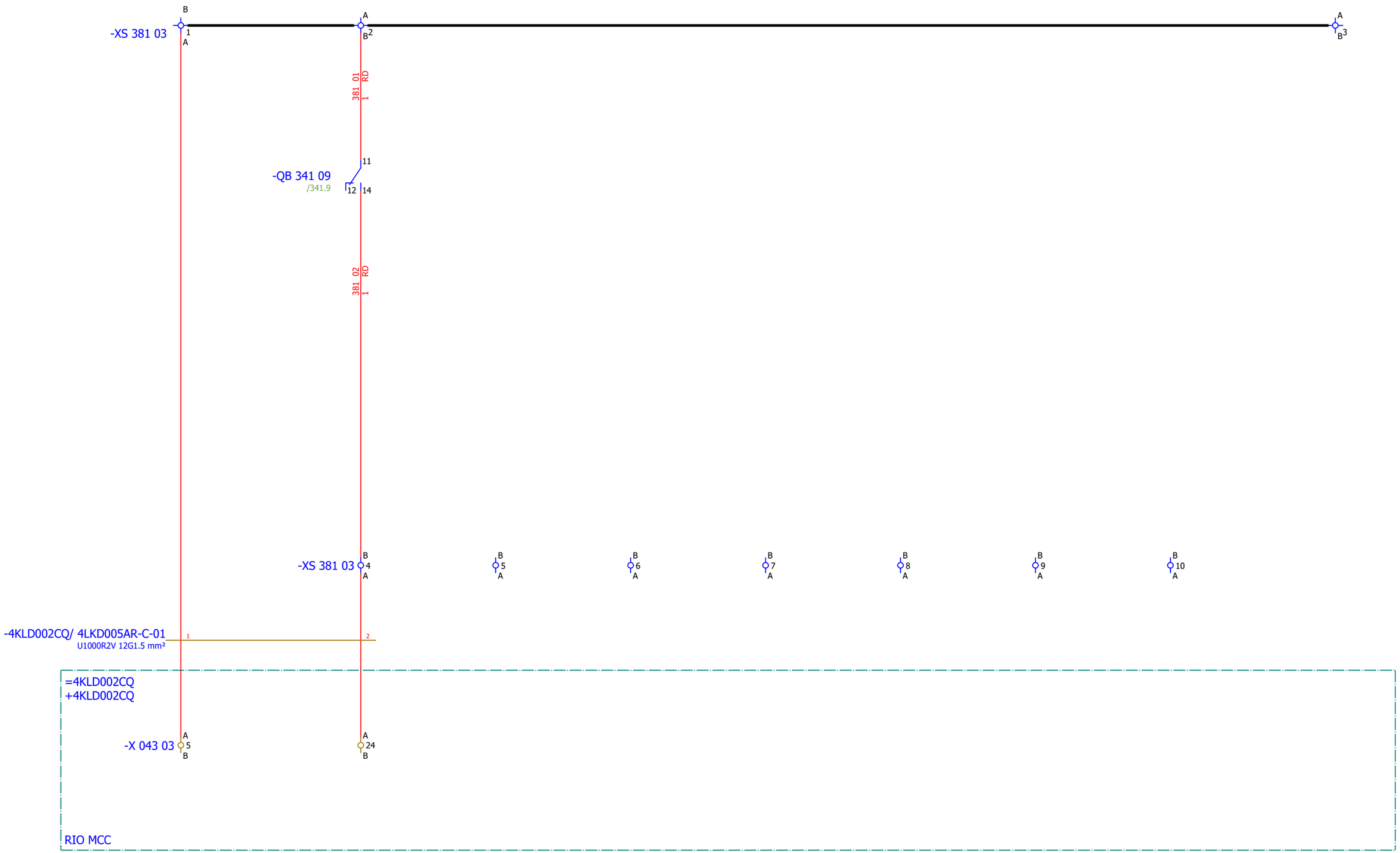

Date:	17.03.2026.	SINTAKSA A Voith Company	Client:	ANDRITZ TEP d.o.o. Ulica 108. brigade ZNG 84, 35000 Slavonski Brod, Croatia	Scope:	BOILER/LOW VOLTAGE CABINET BOILER (NORMAL) 5	Project: BRC-4	Unit & Issuer: ATEP0	Number: 1874	Revision: G
Drawn:	Luka Božičević									#QA
Approved:	Grga Kolić		Object:	RDF Albioma Les Bois Rouge Reunion - France	Content:	SIGNALIZATION	Drawing designation: BRC-4-ATEP0-1874-G			=4LKD001AR
Format:	A3									+4LKD005AR

Sheet: 381
Next: 385

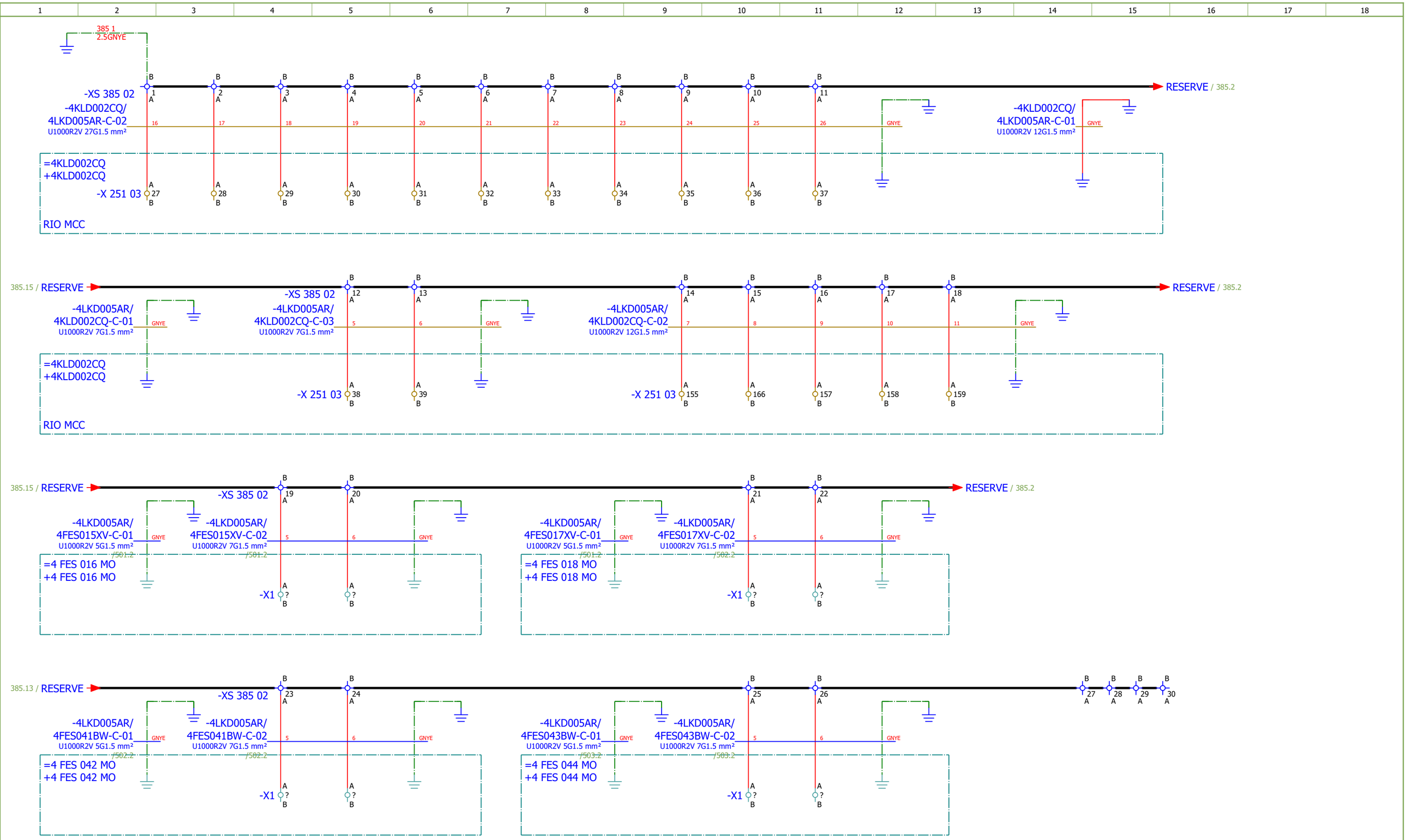

Date:	17.03.2026.	SINTAKSA A Voith Company	Client: ANDRITZ TEP d.o.o. Ulica 108. brigade ZNG 84, 35000 Slavonski Brod, Croatia	Scope: BOILER/LOW VOLTAGE CABINET BOILER (NORMAL) 5	Project: BRC-4	Unit & Issuer: ATEP0	Number: 1874	Revision: G	
Drawn:	Luka Božičević								#QB
Approved:	Grga Kolić		Object: RDF Albioma Les Bois Rouge Reunion - France	Content: SPARE	Drawing designation: BRC-4-ATEP0-1874-G			=4LKD001AR	Sheet: 385
Format:	A3							+4LKD005AR	Next: 391

MEASUREMENT

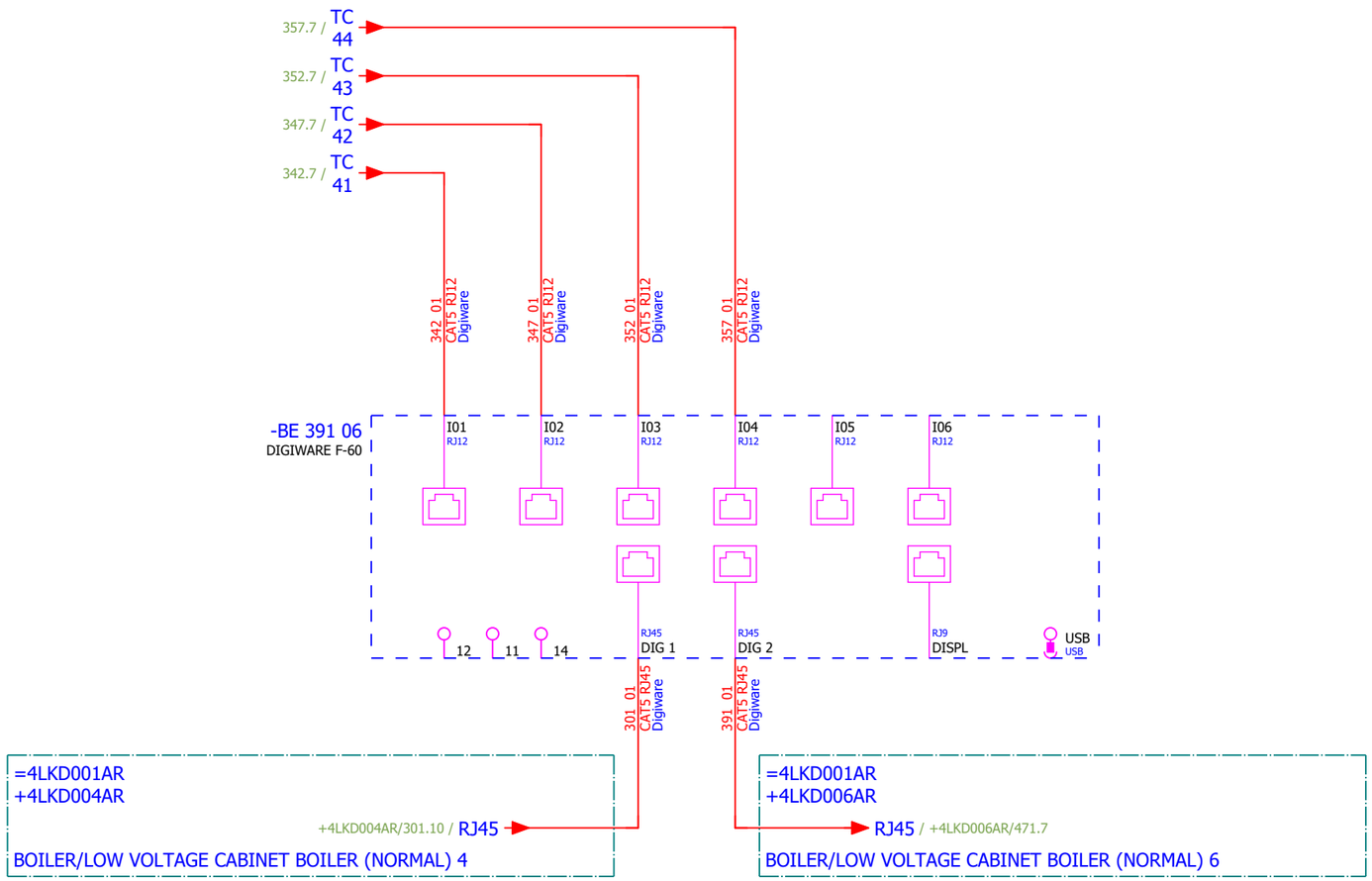

Date:	17.03.2026.	SINTAKSA A Voith Company	Client:	ANDRITZ TEP d.o.o. Ulica 108. brigade ZNG 84, 35000 Slavonski Brod, Croatia	Scope: BOILER/LOW VOLTAGE CABINET BOILER (NORMAL) 5	Project: BRC-4	Unit & Issuer: ATEP0	Number: 1874	Revision: G
Drawn:	Luka Božičević								#V
Approved:	Grga Kolić		Object:	RDF Albioma Les Bois Rouge Reunion - France	Content: COMMUNICATION	Drawing designation: BRC-4-ATEP0-1874-G			=4LKD001AR
Format:	A3								+4LKD005AR

Sheet: 391
Next: 401

Sorting number	Part number	Quantity	Manufacturer	Device	Device description	Device designation
1.	SOC.47290126	1	Socomec	Module location default ISOM DIGIWARE F-60	Network type - Power distribution, Control circuits, Medical Rated voltage - 24 VDC Type - Insulation Fault Locator Indication - Digital	-BE 391 06
2.	SE.ZB4BVBG1	12	Schneider Electric	white light block with body/fixing collar integral LED 24...120VAC/DC		-HL 343 02...-HL 343 04;-HL 348 02...-HL 348 04;-HL 353 02...-HL 353 04;-HL 358 02...-HL 358 04
3.	SE.ZB4BV043	8	Schneider Electric	Red pilot light head Ø22 plain lens for integral LED	Complete body light block assembly, Harmony XB4, metal, universal LED, body fixing collar, 24...120V AC DC Head for pilot light: Red	-HL 343 02;-HL 343 03;-HL 348 02;-HL 348 03;-HL 35 3 02;-HL 353 03;-HL 358 02;-HL 358 03
4.	SE.ZBZ32	12	Schneider Electric	Harmony XB4	Legend holder, plastic	-HL 343 02...-HL 343 04;-HL 348 02...-HL 348 04;-HL 353 02...-HL 353 04;-HL 358 02...-HL 358 04
5.	SE.ZB4BV053	4	Schneider Electric	Orange pilot light head Ø22 plain lens for integral LED	Complete body light block assembly, Harmony XB4, metal, universal LED, body fixing collar, 24...120V AC DC Head for pilot light: Orange	-HL 343 04;-HL 348 04;-HL 353 04;-HL 358 04
6.	SE.RXM4AB2P7	10	Schneider Electric	Miniature Plug-in relay - Zelio RXM 4 C/O 230 V AC 6 A with LED	Miniature Plug-in relay - Zelio RXM 4 C/O 230 V AC 6 A with LED	-K 344 07;-K 344 09;-K 344 11;-K 349 07;-K 349 09;-K 349 11;-K 354 08;-K 354 10;-K 359 08;-K 359 10
7.	SE.RXZE2S114M	10	Schneider Electric	Socket	For RXM2/RXM4 relays Screw connectors Separate contact 4 C/O	-K 344 07;-K 344 09;-K 344 11;-K 349 07;-K 349 09;-K 349 11;-K 354 08;-K 354 10;-K 359 08;-K 359 10
8.	SE.RXM041FU7	10	Schneider Electric	Protection module	RC circuit - 110..240 V AC - for RPZ/RXZ sockets	-K 344 07;-K 344 09;-K 344 11;-K 349 07;-K 349 09;-K 349 11;-K 354 08;-K 354 10;-K 359 08;-K 359 10
9.	SE.LC1D12P7	8	Schneider Electric	Contactor TeSys LC1-D - 3P - AC-3 440V 12 A, Coil 230 V AC	Contactor TeSys LC1-D - 3P - AC-3 440V 18 A, Coil 230 V AC	-KM 342 05;-KM 342 07;-KM 347 05;-KM 347 07;-KM 3 52 05;-KM 352 07;-KM 357 05;-KM 357 07
10.	SE.LADN31	8	Schneider Electric	Auxiliary contact block TeSys - 3 NO + 1 NC,screw-clamps terminals	Auxiliary contact block TeSys - 3 NO + 1 NC,screw-clamps terminals	-KM 342 05;-KM 342 07;-KM 347 05;-KM 347 07;-KM 3 52 05;-KM 352 07;-KM 357 05;-KM 357 07
11.	SE.LAD4RCU	8	Schneider Electric	RC Transient Suppressor 110 TO 250 VAC	RC Transient Suppressor 110 TO 250 VAC	-KM 342 05;-KM 342 07;-KM 347 05;-KM 347 07;-KM 3 52 05;-KM 352 07;-KM 357 05;-KM 357 07
12.	SE.LAD9R1V	3	Schneider Electric	Reversing mechanical interlock kit	Tesys D, reversing mechanical interlock kit, with electrical interlocking, for LC1D09 to LC1D38	-KM 342 05;-KM 347 05;-KM 357 05
13.	SE.GV2P14	4	Schneider Electric	Motor circuit breaker	3-pole 6-10 A Thermal-magnetic	-Q 342 05;-Q 347 05;-Q 352 05;-Q 357 05
14.	SE.GVAE11	4	Schneider Electric	Auxiliary contact block	1NO+1NC Front mounting For GV2	-Q 342 05;-Q 347 05;-Q 352 05;-Q 357 05
15.	SE.GVAD0110	4	Schneider Electric	TeSys GV AD0110 - auxiliary contact - 1 NO + 1 NC (fault)		-Q 342 05;-Q 347 05;-Q 352 05;-Q 357 05
16.	SE.A9F74202	8	Schneider Electric	2-pole MCB, 2A/C	Nominal current: 2 A Tripping curve: C	-Q 343 04;-Q 344 07;-Q 348 04;-Q 349 07;-Q 353 04;-Q 354 08;-Q 358 04;-Q 359 08
17.	SIE.3RW4024-1BB14	2	Siemens	SIRIUS Soft starter	SIRIUS soft starter S0 12.5 A, 5.5 kW/400 V, 40 °C 200-480 V AC, 110-230 V AC/DC Screw terminals	-QA 342 04;-QA 347 04
18.	SE.C10F3TM032	1	Schneider Electric	Circuit breaker, ComPacT NSX100B	36kA/415VAC 3 poles TMD trip unit 32A	-QB 341 09
19.	SE.29450	1	Schneider Electric	Auxiliary contact 1 OF or 1 SD or 1 SDE or 1 SDV	Auxiliary contact 1 OF or 1 SD or 1 SDE or 1 SDV	-QB 341 09
20.	SE.LV429337T	1	Schneider Electric	Direct rotary handle, ComPacT NSX 100/160/250, black handle, IP40	Direct rotary handle, ComPacT NSX 100/160/250, black handle, IP40	-QB 341 09
21.	SE.LVS04033	1	Schneider Electric	LINERGY DP	LINERGY DP 3P D.BLK/COMPACT 250A 27HOLES	-QB 341 09
22.	SE.LV429517	1	Schneider Electric	Insulation accessories 1 long terminal shield for breaker or plug-in base, 3P - NSX100...250	Insulation accessories 1 long terminal shield for breaker or plug-in base, 3P - NSX100...250	-QB 341 09

Sorting number	Part number	Quantity	Manufacturer	Device	Device description	Device designation
23.	PXC.2950129	1	Phoenix Contact	Component for protective circuit	Diode module, with 14 diodes, common anode, diode type 1N 4007	-R 362 03
24.	PXC.2954882	1	Phoenix Contact	Diode block	Diode module, with eight diodes, common anode, diode type 1N 5408	-R 362 07
25.	PXC.2950116	1	Phoenix Contact	Component for protective circuit	Diode module, with 14 diodes, common cathode, diode type 1N 4007	-R 362 10
26.	PXC.2954879	1	Phoenix Contact	Component for protective circuit	Diode module, with eight diodes, common cathode, diode type 1N 5408	-R 362 14
27.	SE.XPSBAC34AP	8	Schneider Electric	Safety module	Harmony Safety Automation Estop or guard ,Harmony XPS, connected to supply terminals 48-240 V AC/DC , no inputs, screw	-RP 343 06;-RP 343 12;-RP 348 06;-RP 348 12;-RP 35 3 06;-RP 353 12;-RP 358 05;-RP 358 11
28.	SE.XB4BD33	8	Schneider Electric	Selector switch, BLACK, 1-0-2, 2NO	Metal Black Ø22 3 positions 2 NO	-S 343 07;-S 343 07.1;-S 348 07;-S 348 07.1;-S 353 0 7;-S 353 07.1;-S 358 07;-S 358 07.1
29.	SE.ZBE101	12	Schneider Electric	Single contact block NO	Harmony XB4 Silver alloy 1 NO	-S 343 07.1;-S 348 07.1;-S 353 07.1;-S 358 07.1
30.	SE.ZB4BA2	2	Schneider Electric	black flush pushbutton head Ø22 spring return unmarked	black flush pushbutton head Ø22 spring return unmarked	-S 344 11;-S 349 11
31.	SE.ZB4BZ102	2	Schneider Electric	single contact block with body/fixing collar 1NC screw clamp termil	single contact block with body/fixing collar 1NC screw clamp termil	-S 344 11;-S 349 11
32.	SOC.47506015	4	Socomec	TORES LOCATION SENSOR DELTA IP-15 (15mm)	Maximal diameter of cable: 15mm	-TC 342 05;-TC 347 05;-TC 352 05;-TC 357 05
33.	SOC.47290590	4	Socomec	ISOM T-15	Connection adaptor ISOM T-15 to ISOM Digiware F-60 modules	-TC 342 05;-TC 347 05;-TC 352 05;-TC 357 05
34.	PXC.3209510	172	Phoenix Contact	PT 2,5 - Feed-through terminal block	Feed-through terminal block, nom. voltage: 800 V, nominal current: 24 A, number of connections: 2, number of positions: 1, connection method: Push-in connection, Rated cross section: 2.5 mm2, cross section: 0.14 mm2 - 4 mm2, mounting type: NS 35/7,5, NS 35/15, color: gray	-X 342 05;-X 343 09;-X 345 06;-X 347 05;-X 348 09;-X 350 06;-X 352 05;-X 353 09;-X 355 06;-X 357 05;-X 3 58 09;-X 360 06;-XB 362 03;-XS 381 03;-XS 385 02

1	2	3	4	5	6	7	8	9	10	11	12	13	14	15	16	17	18

Cable name: **4LKD005AR/ 4FES015XV-C-01**

Cable type: **U1000R2V** No. of conn., diameter, length: **5G1.5 mm² /**

Remark:

Function text	Page / Column	FROM	Terminal	Conductor	TO	Terminal	Page / Column	Function text
FORWARD	=4LKD001AR+4LKD005AR/353.9	=4LKD001AR+4LKD005AR-X 353 09	1:A	**BN**	=4 FES 016 MO+4 FES 015 XV-X1	3	=4LKD001AR+4LKD005AR/353.9	FORWARD
=	=4LKD001AR+4LKD005AR/353.9			**BK**	=4LKD001AR+4LKD005AR-X 353 09	4:A	=4LKD001AR+4LKD005AR/353.10	=
=	=4LKD001AR+4LKD005AR/353.9	=4LKD001AR+4LKD005AR-X 353 09	2:A	**GY**	=4 FES 016 MO+4 FES 015 XV-X1	8	=4LKD001AR+4LKD005AR/353.9	=
BACKWARD	=4LKD001AR+4LKD005AR/353.15	=4LKD001AR+4LKD005AR-X 353 09	7:A	**BU**	=4 FES 016 MO+4 FES 015 XV-X1	10	=4LKD001AR+4LKD005AR/353.15	BACKWARD
	=4LKD001AR+4LKD005AR/385.3	=4LKD001AR+4LKD005AR-PE		**GNYE**	=4 FES 016 MO+4 FES 016 MO-PE		=4LKD001AR+4LKD005AR/385.2	

Cable name: **4LKD005AR/ 4FES015XV-C-02**

Cable type: **U1000R2V** No. of conn., diameter, length: **7G1.5 mm² /**

Remark:

Function text	Page / Column	FROM	Terminal	Conductor	TO	Terminal	Page / Column	Function text
READY	=4LKD001AR+4LKD005AR/355.11	=4LKD001AR+4LKD005AR-X 355 06	3:A	**1**	=4 FES 016 MO+4 FES 015 XV-X1	5:A	=4LKD001AR+4LKD005AR/355.11	READY
=	=4LKD001AR+4LKD005AR/355.11	=4LKD001AR+4LKD005AR-X 355 06	7:A	**2**	=4 FES 016 MO+4 FES 015 XV-X1	6:A	=4LKD001AR+4LKD005AR/355.11	=
	=4LKD001AR+4LKD005AR/356.4	=4LKD001AR+4LKD005AR-X 355 06	4:B	**3**	=4 FES 016 MO+4 FES 015 XV-X1	11:A	=4LKD001AR+4LKD005AR/356.4	
ROTARY DISPENSER BELOW SH 2 - "0" PULSE	=4LKD001AR+4LKD005AR/356.6	=4LKD001AR+4LKD005AR-X 355 06	13:B	**4**	=4 FES 016 MO+4 FES 015 XV-X1	12:A	=4LKD001AR+4LKD005AR/356.6	ROTARY DISPENSER BELOW SH 2 - "0" PULSE
	=4LKD001AR+4LKD005AR/385.4	=4LKD001AR+4LKD005AR-XS 385 02	19:A	**5**	=4 FES 016 MO+4 FES 016 MO-X1	?:A	=4LKD001AR+4LKD005AR/385.4	
	=4LKD001AR+4LKD005AR/385.5	=4LKD001AR+4LKD005AR-XS 385 02	20:A	**6**	=4 FES 016 MO+4 FES 016 MO-X1	?:A	=4LKD001AR+4LKD005AR/385.5	
	=4LKD001AR+4LKD005AR/385.6	=4LKD001AR+4LKD005AR-PE		**GNYE**	=4 FES 016 MO+4 FES 016 MO-PE		=4LKD001AR+4LKD005AR/385.6	

Cable name: **4LKD005AR/ 4FES016MO-B-01**

Cable type: **U1000R2V** No. of conn., diameter, length: **4G2.5 mm² /**

Remark:

Function text	Page / Column	FROM	Terminal	Conductor	TO	Terminal	Page / Column	Function text
	=4LKD001AR+4LKD005AR/352.5	=4LKD001AR+4LKD005AR-X 352 05	1:A	**BN**	=4 FES 016 MO+4 FES 016 MO-M43	U1	=4LKD001AR+4LKD005AR/352.5	
[4 FES 016 MO] ROTARY DISPENSER BELOW SH 2	=4LKD001AR+4LKD005AR/352.5	=4LKD001AR+4LKD005AR-X 352 05	2:A	**BK**	=4 FES 016 MO+4 FES 016 MO-M43	V1	=4LKD001AR+4LKD005AR/352.5	
=	=4LKD001AR+4LKD005AR/352.5	=4LKD001AR+4LKD005AR-X 352 05	3:A	**GY**	=4 FES 016 MO+4 FES 016 MO-M43	W1	=4LKD001AR+4LKD005AR/352.5	
	=4LKD001AR+4LKD005AR/352.7	=4LKD001AR+4LKD005AR-PE		**GNYE**	=4 FES 016 MO+4 FES 016 MO-M43	PE	=4LKD001AR+4LKD005AR/352.5	

Cable name: **4LKD005AR/ 4FES017XV-C-01**

Cable type: **U1000R2V** No. of conn., diameter, length: **5G1.5 mm² /**

Remark:

Function text	Page / Column	FROM	Terminal	Conductor	TO	Terminal	Page / Column	Function text
FORWARD	=4LKD001AR+4LKD005AR/358.9	=4LKD001AR+4LKD005AR-X 358 09	1:A	**BN**	=4 FES 018 MO+4 FES 017 XV-X1	3	=4LKD001AR+4LKD005AR/358.9	FORWARD
=	=4LKD001AR+4LKD005AR/358.9			**BK**	=4LKD001AR+4LKD005AR-X 358 09	4:A	=4LKD001AR+4LKD005AR/358.10	=
=	=4LKD001AR+4LKD005AR/358.9	=4LKD001AR+4LKD005AR-X 358 09	2:A	**GY**	=4 FES 018 MO+4 FES 017 XV-X1	8	=4LKD001AR+4LKD005AR/358.9	=
BACKWARD	=4LKD001AR+4LKD005AR/358.15	=4LKD001AR+4LKD005AR-X 358 09	7:A	**BU**	=4 FES 018 MO+4 FES 017 XV-X1	10	=4LKD001AR+4LKD005AR/358.15	BACKWARD
	=4LKD001AR+4LKD005AR/385.9	=4LKD001AR+4LKD005AR-PE		**GNYE**	=4 FES 018 MO+4 FES 018 MO-PE		=4LKD001AR+4LKD005AR/385.8	

1	2	3	4	5	6	7	8	9	10	11	12	13	14	15	16	17	18

Cable name: **4LKD005AR/ 4FES017XV-C-02**

Cable type: **U1000R2V** No. of conn., diameter, length: **7G1.5 mm² /**

Remark:

Function text	Page / Column	FROM	Terminal	Conductor	TO	Terminal	Page / Column	Function text
READY	=4LKD001AR+4LKD005AR/360.11	=4LKD001AR+4LKD005AR-X 360 06	3:A	**1**	=4 FES 018 MO+4 FES 017 XV-X1	5:A	=4LKD001AR+4LKD005AR/360.11	READY
=	=4LKD001AR+4LKD005AR/360.11	=4LKD001AR+4LKD005AR-X 360 06	7:A	**2**	=4 FES 018 MO+4 FES 017 XV-X1	6:A	=4LKD001AR+4LKD005AR/360.11	=
	=4LKD001AR+4LKD005AR/361.4	=4LKD001AR+4LKD005AR-X 360 06	4:B	**3**	=4 FES 018 MO+4 FES 017 XV-X1	11:A	=4LKD001AR+4LKD005AR/361.4	
ROTARY DISPENSER BELOW SH 1 - "0" PULSE	=4LKD001AR+4LKD005AR/361.6	=4LKD001AR+4LKD005AR-X 360 06	13:B	**4**	=4 FES 018 MO+4 FES 017 XV-X1	12:A	=4LKD001AR+4LKD005AR/361.6	ROTARY DISPENSER BELOW SH 1 - "0" PULSE
	=4LKD001AR+4LKD005AR/385.10	=4LKD001AR+4LKD005AR-XS 385 02	21:A	**5**	=4 FES 018 MO+4 FES 018 MO-X1	?:A	=4LKD001AR+4LKD005AR/385.10	
	=4LKD001AR+4LKD005AR/385.11	=4LKD001AR+4LKD005AR-XS 385 02	22:A	**6**	=4 FES 018 MO+4 FES 018 MO-X1	?:A	=4LKD001AR+4LKD005AR/385.11	
	=4LKD001AR+4LKD005AR/385.12	=4LKD001AR+4LKD005AR-PE		**GNYE**	=4 FES 018 MO+4 FES 018 MO-PE		=4LKD001AR+4LKD005AR/385.12	

Cable name: **4LKD005AR/ 4FES018MO-B-01**

Cable type: **U1000R2V** No. of conn., diameter, length: **4G2.5 mm² /**

Remark:

Function text	Page / Column	FROM	Terminal	Conductor	TO	Terminal	Page / Column	Function text
	=4LKD001AR+4LKD005AR/357.5	=4LKD001AR+4LKD005AR-X 357 05	1:A	**BN**	=4 FES 018 MO+4 FES 018 MO-M53	U1	=4LKD001AR+4LKD005AR/357.5	
[4 FES 018 MO] ROTARY DISPENSER BELOW SH 1	=4LKD001AR+4LKD005AR/357.5	=4LKD001AR+4LKD005AR-X 357 05	2:A	**BK**	=4 FES 018 MO+4 FES 018 MO-M53	V1	=4LKD001AR+4LKD005AR/357.5	
=	=4LKD001AR+4LKD005AR/357.5	=4LKD001AR+4LKD005AR-X 357 05	3:A	**GY**	=4 FES 018 MO+4 FES 018 MO-M53	W1	=4LKD001AR+4LKD005AR/357.5	
	=4LKD001AR+4LKD005AR/357.7	=4LKD001AR+4LKD005AR-PE		**GNYE**	=4 FES 018 MO+4 FES 018 MO-M53	PE	=4LKD001AR+4LKD005AR/357.5	

Cable name: **4LKD005AR/ 4FES041BW-C-01**

Cable type: **U1000R2V** No. of conn., diameter, length: **5G1.5 mm² /**

Remark:

Function text	Page / Column	FROM	Terminal	Conductor	TO	Terminal	Page / Column	Function text
FORWARD	=4LKD001AR+4LKD005AR/343.9	=4LKD001AR+4LKD005AR-X 343 09	1:A	**BN**	=4 FES 042 MO+4 FES 042 MO-X1	3	=4LKD001AR+4LKD005AR/343.9	FORWARD
=	=4LKD001AR+4LKD005AR/343.9			**BK**	=4LKD001AR+4LKD005AR-X 343 09	4:A	=4LKD001AR+4LKD005AR/343.10	=
=	=4LKD001AR+4LKD005AR/343.9	=4LKD001AR+4LKD005AR-X 343 09	2:A	**GY**	=4 FES 042 MO+4 FES 042 MO-X1	8	=4LKD001AR+4LKD005AR/343.9	=
BACKWARD	=4LKD001AR+4LKD005AR/343.15	=4LKD001AR+4LKD005AR-X 343 09	7:A	**BU**	=4 FES 042 MO+4 FES 042 MO-X1	10	=4LKD001AR+4LKD005AR/343.15	BACKWARD
	=4LKD001AR+4LKD005AR/385.3	=4LKD001AR+4LKD005AR-PE		**GNYE**	=4 FES 042 MO+4 FES 042 MO-PE		=4LKD001AR+4LKD005AR/385.2	

Cable name: **4LKD005AR/ 4FES041BW-C-02**

Cable type: **U1000R2V** No. of conn., diameter, length: **7G1.5 mm² /**

Remark:

Function text	Page / Column	FROM	Terminal	Conductor	TO	Terminal	Page / Column	Function text
READY	=4LKD001AR+4LKD005AR/345.13	=4LKD001AR+4LKD005AR-X 345 06	3:A	**1**	=4 FES 042 MO+4 FES 042 MO-X1	5:A	=4LKD001AR+4LKD005AR/345.13	READY
=	=4LKD001AR+4LKD005AR/345.13	=4LKD001AR+4LKD005AR-X 345 06	9:A	**2**	=4 FES 042 MO+4 FES 042 MO-X1	6:A	=4LKD001AR+4LKD005AR/345.13	=
	=4LKD001AR+4LKD005AR/346.4	=4LKD001AR+4LKD005AR-X 345 06	)4:B	**3**	=4 FES 042 MO+4 FES 042 MO-X1	11:A	=4LKD001AR+4LKD005AR/346.4	
BROYEUR DE CENDRES SOUS LE SH 2 - "0" PULSE	=4LKD001AR+4LKD005AR/346.6	=4LKD001AR+4LKD005AR-X 345 06	11:B	**4**	=4 FES 042 MO+4 FES 042 MO-X1	12:A	=4LKD001AR+4LKD005AR/346.6	BROYEUR DE CENDRES SOUS LE SH 2 - "0" PULSE
	=4LKD001AR+4LKD005AR/385.4	=4LKD001AR+4LKD005AR-XS 385 02	23:A	**5**	=4 FES 042 MO+4 FES 042 MO-X1	?:A	=4LKD001AR+4LKD005AR/385.4	
	=4LKD001AR+4LKD005AR/385.5	=4LKD001AR+4LKD005AR-XS 385 02	24:A	**6**	=4 FES 042 MO+4 FES 042 MO-X1	?:A	=4LKD001AR+4LKD005AR/385.5	
	=4LKD001AR+4LKD005AR/385.6	=4LKD001AR+4LKD005AR-PE		**GNYE**	=4 FES 042 MO+4 FES 042 MO-PE		=4LKD001AR+4LKD005AR/385.6	

1	2	3	4	5	6	7	8	9	10	11	12	13	14	15	16	17	18

Cable name: **4LKD005AR/ 4FES042MO-B-01**

Cable type: **U1000R2V** | No. of conn., diameter, length: **4G2.5 mm² /**

Remark:

Function text	Page / Column	FROM	Terminal	Conductor	TO	Terminal	Page / Column	Function text
	=4LKD001AR+4LKD005AR/342.5	=4LKD001AR+4LKD005AR-X 342 05	1:A	**BN**	=4 FES 042 MO+4 FES 042 MO-M41	U1	=4LKD001AR+4LKD005AR/342.5	
[4 FES 042 MO] ASH CRUSHER BELOW SH 2	=4LKD001AR+4LKD005AR/342.5	=4LKD001AR+4LKD005AR-X 342 05	2:A	**BK**	=4 FES 042 MO+4 FES 042 MO-M41	V1	=4LKD001AR+4LKD005AR/342.5	
=	=4LKD001AR+4LKD005AR/342.5	=4LKD001AR+4LKD005AR-X 342 05	3:A	**GY**	=4 FES 042 MO+4 FES 042 MO-M41	W1	=4LKD001AR+4LKD005AR/342.5	
	=4LKD001AR+4LKD005AR/342.7	=4LKD001AR+4LKD005AR-PE		**GNYE**	=4 FES 042 MO+4 FES 042 MO-M41	PE	=4LKD001AR+4LKD005AR/342.5	

Cable name: **4LKD005AR/ 4FES043BW-C-01**

Cable type: **U1000R2V** | No. of conn., diameter, length: **5G1.5 mm² /**

Remark:

Function text	Page / Column	FROM	Terminal	Conductor	TO	Terminal	Page / Column	Function text
FORWARD	=4LKD001AR+4LKD005AR/348.9	=4LKD001AR+4LKD005AR-X 348 09	1:A	**BN**	=4 FES 044 MO+4 FES 043 BW-X1	3	=4LKD001AR+4LKD005AR/348.9	FORWARD
=	=4LKD001AR+4LKD005AR/348.9			**BK**	=4LKD001AR+4LKD005AR-X 348 09	4:A	=4LKD001AR+4LKD005AR/348.10	=
=	=4LKD001AR+4LKD005AR/348.9	=4LKD001AR+4LKD005AR-X 348 09	2:A	**GY**	=4 FES 044 MO+4 FES 043 BW-X1	8	=4LKD001AR+4LKD005AR/348.9	=
BACKWARD	=4LKD001AR+4LKD005AR/348.15	=4LKD001AR+4LKD005AR-X 348 09	7:A	**BU**	=4 FES 044 MO+4 FES 043 BW-X1	10	=4LKD001AR+4LKD005AR/348.15	BACKWARD
	=4LKD001AR+4LKD005AR/385.9	=4LKD001AR+4LKD005AR-PE		**GNYE**	=4 FES 044 MO+4 FES 044 MO-PE		=4LKD001AR+4LKD005AR/385.8	

Cable name: **4LKD005AR/ 4FES043BW-C-02**

Cable type: **U1000R2V** | No. of conn., diameter, length: **7G1.5 mm² /**

Remark:

Function text	Page / Column	FROM	Terminal	Conductor	TO	Terminal	Page / Column	Function text
READY	=4LKD001AR+4LKD005AR/350.13	=4LKD001AR+4LKD005AR-X 350 06	3:A	**1**	=4 FES 044 MO+4 FES 043 BW-X1	5:A	=4LKD001AR+4LKD005AR/350.13	READY
=	=4LKD001AR+4LKD005AR/350.13	=4LKD001AR+4LKD005AR-X 350 06	9:A	**2**	=4 FES 044 MO+4 FES 043 BW-X1	6:A	=4LKD001AR+4LKD005AR/350.13	=
	=4LKD001AR+4LKD005AR/351.4	=4LKD001AR+4LKD005AR-X 350 06	)4:B	**3**	=4 FES 044 MO+4 FES 043 BW-X1	11:A	=4LKD001AR+4LKD005AR/351.4	
ASH CRUSHER BELOW SH 1 - "0" PULSE	=4LKD001AR+4LKD005AR/351.6	=4LKD001AR+4LKD005AR-X 350 06	11:B	**4**	=4 FES 044 MO+4 FES 043 BW-X1	12:A	=4LKD001AR+4LKD005AR/351.6	ASH CRUSHER BELOW SH 1 - "0" PULSE
	=4LKD001AR+4LKD005AR/385.10	=4LKD001AR+4LKD005AR-XS 385 02	25:A	**5**	=4 FES 044 MO+4 FES 044 MO-X1	?:A	=4LKD001AR+4LKD005AR/385.10	
	=4LKD001AR+4LKD005AR/385.11	=4LKD001AR+4LKD005AR-XS 385 02	26:A	**6**	=4 FES 044 MO+4 FES 044 MO-X1	?:A	=4LKD001AR+4LKD005AR/385.11	
	=4LKD001AR+4LKD005AR/385.12	=4LKD001AR+4LKD005AR-PE		**GNYE**	=4 FES 044 MO+4 FES 044 MO-PE		=4LKD001AR+4LKD005AR/385.12	

Cable name: **4LKD005AR/ 4FES044MO-B-01**

Cable type: **U1000R2V** | No. of conn., diameter, length: **4G2.5 mm² /**

Remark:

Function text	Page / Column	FROM	Terminal	Conductor	TO	Terminal	Page / Column	Function text
	=4LKD001AR+4LKD005AR/347.5	=4LKD001AR+4LKD005AR-X 347 05	1:A	**BN**	=4 FES 044 MO+4 FES 044 MO-M42	U1	=4LKD001AR+4LKD005AR/347.5	
[4 FES 044 MO] ASH CRUSHER BELOW SH 1	=4LKD001AR+4LKD005AR/347.5	=4LKD001AR+4LKD005AR-X 347 05	2:A	**BK**	=4 FES 044 MO+4 FES 044 MO-M42	V1	=4LKD001AR+4LKD005AR/347.5	
=	=4LKD001AR+4LKD005AR/347.5	=4LKD001AR+4LKD005AR-X 347 05	3:A	**GY**	=4 FES 044 MO+4 FES 044 MO-M42	W1	=4LKD001AR+4LKD005AR/347.5	
	=4LKD001AR+4LKD005AR/347.7	=4LKD001AR+4LKD005AR-PE		**GNYE**	=4 FES 044 MO+4 FES 044 MO-M42	PE	=4LKD001AR+4LKD005AR/347.5	

Terminal diagram

Strip

=4LKD001AR+4LKD005AR-X 342 05

A SIDE								B SIDE
Placement	Target designation	Cable name and type	Conductor	Jumper		Wiring	Target designation
/342.5	=4 FES 042 MO+4 FES 042 MO-M41:U1	4LKD005AR/ 4FES042MO-B-01 U1000R2V 4G2.5 mm²	BN 2.5 mm²	'	1	BK 2.5 mm²	-QA 342 04:2/T1
/342.5	=4 FES 042 MO+4 FES 042 MO-M41:V1	4LKD005AR/ 4FES042MO-B-01 U1000R2V 4G2.5 mm²	BK 2.5 mm²	'	2	BK 2.5 mm²	-QA 342 04:4/T2
/342.5	=4 FES 042 MO+4 FES 042 MO-M41:W1	4LKD005AR/ 4FES042MO-B-01 U1000R2V 4G2.5 mm²	GY 2.5 mm²	'	3	BK 2.5 mm²	-QA 342 04:6/T3

Terminal diagram

Strip

=4LKD001AR+4LKD005AR-X 343 09

A SIDE							B SIDE
Placement	Target designation	Cable name and type	Conductor	Jumper		Wiring	Target designation
/343.9	=4 FES 042 MO+4 FES 042 MO-X1:3	4LKD005AR/ 4FES042MO-C-01 U1000R2V 5G1.5 mm²	BN 1.5 mm²		1	WH 1 mm²	-Q 342 05:21
/343.9	=4 FES 042 MO+4 FES 042 MO-X1:8	4LKD005AR/ 4FES042MO-C-01 U1000R2V 5G1.5 mm²	GY 1.5 mm²		2	WH 1 mm²	-K 344 09:11
					3	WH 1 mm²	-KM 342 05:74
/343.9		4LKD005AR/ 4FES042MO-C-01 U1000R2V 5G1.5 mm²	BK 1.5 mm²		4	WH 1 mm²	-KM 342 05:73
					5	WH 1 mm²	-KM 342 07:73
					6	WH 1 mm²	-S 343 07.1:23
/343.15	=4 FES 042 MO+4 FES 042 MO-X1:10	4LKD005AR/ 4FES042MO-C-01 U1000R2V 5G1.5 mm²	BU 1.5 mm²		7	WH 1 mm²	-K 344 09:21
						WH 1 mm²	-KM 342 07:74
					8	WH 1 mm²	-S 343 07.1:43
					9	BN 1 mm²	-S 344 11:12
					10	BN 1 mm²	-QA 342 04:A1
					11		
					12		
					13		
					14		

Date:	17.03.2026.	SINTAKSA A Voith Company	Client:	ANDRITZ TEP d.o.o. Ulica 108. brigade ZNG 84, 35000 Slavonski Brod, Croatia	Scope: BOILER/LOW VOLTAGE CABINET BOILER (NORMAL) 5	Project: BRC-4	Unit & Issuer: ATEP0	Number: 1874	Revision: G
Drawn:	Luka Božičević								#Y
Approved:	Grga Kolić		Object:	RDF Albioma Les Bois Rouge Reunion - France	Content: Terminal diagram =4LKD001AR+4LKD005AR-X 343 09	Drawing designation: BRC-4-ATEP0-1874-G			=4LKD001AR
Format:	A3								+4LKD005AR

Sheet: 602
Next: 603

Terminal diagram

Strip

=4LKD001AR+4LKD005AR-X 345 06

A SIDE						B SIDE
Placement	Target designation	Cable name and type	Conductor	Jumper	Wiring	Target designation
				1		
				2	RD 1 mm²	-KM 342 05:83
/345.13	=4 FES 042 MO+4 FES 042 MO-X1:5:A	4LKD005AR/ 4FES042MO-C-02 U1000R2V 7G1.5 mm²	1 1.5 mm²	3		
				)4	3 1.5 mm²	=4 FES 042 MO+4 FES 042
				5		
				6	RD 1 mm²	-KM 342 05:84
				7	RD 1 mm²	-KM 342 07:84
				8	RD 1 mm²	-K 344 11:34
/345.13	=4 FES 042 MO+4 FES 042 MO-X1:6:A	4LKD005AR/ 4FES042MO-C-02 U1000R2V 7G1.5 mm²	2 1.5 mm²	9	RD 1 mm²	-K 344 09:31
				10	RD 1 mm²	-S 343 07.1:54
				11	4 1.5 mm²	=4 FES 042 MO+4 FES 042
				12		
				13		
				14		
				15		

Date:	17.03.2026.	SINTAKSA A Voith Company	Client:	ANDRITZ TEP d.o.o. Ulica 108. brigade ZNG 84, 35000 Slavonski Brod, Croatia	Scope: BOILER/LOW VOLTAGE CABINET BOILER (NORMAL) 5	Project: BRC-4	Unit & Issuer: ATEP0	Number: 1874	Revision: G
Drawn:	Luka Božičević								#Y
Approved:	Grga Kolić		Object:	RDF Albioma Les Bois Rouge Reunion - France	Content: Terminal diagram =4LKD001AR+4LKD005AR-X 345 06	Drawing designation: BRC-4-ATEP0-1874-G		=4LKD001AR	Sheet: 603
Format:	A3							+4LKD005AR	Next: 604

Terminal diagram

Strip

=4LKD001AR+4LKD005AR-X 347 05

A SIDE								B SIDE
Placement	Target designation	Cable name and type	Conductor	Jumper		Wiring	Target designation
/347.5	=4 FES 044 MO+4 FES 044 MO-M42:U1	4LKD005AR/ 4FES044MO-B-01 U1000R2V 4G2.5 mm²	BN 2.5 mm²	'	1	BK 2.5 mm²	-QA 347 04:2/T1
/347.5	=4 FES 044 MO+4 FES 044 MO-M42:V1	4LKD005AR/ 4FES044MO-B-01 U1000R2V 4G2.5 mm²	BK 2.5 mm²	'	2	BK 2.5 mm²	-QA 347 04:4/T2
/347.5	=4 FES 044 MO+4 FES 044 MO-M42:W1	4LKD005AR/ 4FES044MO-B-01 U1000R2V 4G2.5 mm²	GY 2.5 mm²	'	3	BK 2.5 mm²	-QA 347 04:6/T3

Terminal diagram

Strip

=4LKD001AR+4LKD005AR-X 348 09

A SIDE							B SIDE
Placement	Target designation	Cable name and type	Conductor	Jumper		Wiring	Target designation
/348.9	=4 FES 044 MO+4 FES 044 MO-X1:3	4LKD005AR/ 4FES044MO-C-01 U1000R2V 5G1.5 mm²	BN 1.5 mm²		1	WH 1 mm²	-Q 347 05:21
/348.9	=4 FES 044 MO+4 FES 044 MO-X1:8	4LKD005AR/ 4FES044MO-C-01 U1000R2V 5G1.5 mm²	GY 1.5 mm²		2	WH 1 mm²	-K 349 09:11
					3	WH 1 mm²	-KM 347 05:74
/348.9		4LKD005AR/ 4FES044MO-C-01 U1000R2V 5G1.5 mm²	BK 1.5 mm²		4	WH 1 mm²	-KM 347 05:73
					5	WH 1 mm²	-KM 347 07:73
					6	WH 1 mm²	-S 348 07.1:23
/348.15	=4 FES 044 MO+4 FES 044 MO-X1:10	4LKD005AR/ 4FES044MO-C-01 U1000R2V 5G1.5 mm²	BU 1.5 mm²		7	WH 1 mm²	-K 349 09:21
					8	WH 1 mm²	-S 348 07.1:43
					9	BN 1 mm²	-S 349 11:12
					10	BN 1 mm²	-QA 347 04:A1
					11		
					12		
					13		
					14		

Date:	17.03.2026.	SINTAKSA A Voith Company	Client:	ANDRITZ TEP d.o.o. Ulica 108. brigade ZNG 84, 35000 Slavonski Brod, Croatia	Scope: BOILER/LOW VOLTAGE CABINET BOILER (NORMAL) 5	Project: BRC-4	Unit & Issuer: ATEP0	Number: 1874	Revision: G
Drawn:	Luka Božičević								#Y
Approved:	Grga Kolić		Object:	RDF Albioma Les Bois Rouge Reunion - France	Content: Terminal diagram =4LKD001AR+4LKD005AR-X 348 09	Drawing designation: BRC-4-ATEP0-1874-G		=4LKD001AR	Sheet: 605
Format:	A3							+4LKD005AR	Next: 606

Terminal diagram

Strip

=4LKD001AR+4LKD005AR-X 350 06

A SIDE						B SIDE
Placement	Target designation	Cable name and type	Conductor	Jumper	Wiring	Target designation
				1		
				2	RD 1 mm²	-KM 347 05:83
/350.13	=4 FES 044 MO+4 FES 044 MO-X1:5:A	4LKD005AR/ 4FES044MO-C-02 U1000R2V 7G1.5 mm²	1 1.5 mm²	3		
				)4	3 1.5 mm²	=4 FES 044 MO+4 FES 044
				5		
				6	RD 1 mm²	-KM 347 05:84
				7	RD 1 mm²	-KM 347 07:84
				8	RD 1 mm²	-K 349 11:34
/350.13	=4 FES 044 MO+4 FES 044 MO-X1:6:A	4LKD005AR/ 4FES044MO-C-02 U1000R2V 7G1.5 mm²	2 1.5 mm²	9	RD 1 mm²	-K 349 09:31
				10	RD 1 mm²	-S 348 07.1:54
				11	4 1.5 mm²	=4 FES 044 MO+4 FES 044
				12		
				13		
				14		
				15		

Date:	17.03.2026.	SINTAKSA A Voith Company	Client:	ANDRITZ TEP d.o.o. Ulica 108. brigade ZNG 84, 35000 Slavonski Brod, Croatia	Scope: BOILER/LOW VOLTAGE CABINET BOILER (NORMAL) 5	Project: BRC-4	Unit & Issuer: ATEP0	Number: 1874	Revision: G
Drawn:	Luka Božičević								#Y
Approved:	Grga Kolić		Object:	RDF Albioma Les Bois Rouge Reunion - France	Content: Terminal diagram =4LKD001AR+4LKD005AR-X 350 06	Drawing designation: BRC-4-ATEP0-1874-G			=4LKD001AR
Format:	A3								+4LKD005AR

Sheet: 606
Next: 607

Terminal diagram

Strip

=4LKD001AR+4LKD005AR-X 352 05

A SIDE								B SIDE
Placement	Target designation	Cable name and type	Conductor	Jumper		Wiring	Target designation	
/352.5	=4 FES 016 MO+4 FES 016 MO-M43:U1	4LKD005AR/ 4FES016MO-B-01 U1000R2V 4G2.5 mm²	BN 2.5 mm²	'	1	BK 2.5 mm²	-KM 352 05:2/T1	
/352.5	=4 FES 016 MO+4 FES 016 MO-M43:V1	4LKD005AR/ 4FES016MO-B-01 U1000R2V 4G2.5 mm²	BK 2.5 mm²	'	2	BK 2.5 mm²	-KM 352 05:4/T2	
/352.5	=4 FES 016 MO+4 FES 016 MO-M43:W1	4LKD005AR/ 4FES016MO-B-01 U1000R2V 4G2.5 mm²	GY 2.5 mm²	'	3	BK 2.5 mm²	-KM 352 05:6/T3	

Terminal diagram

Strip

=4LKD001AR+4LKD005AR-X 353 09

A SIDE						B SIDE
Placement	Target designation	Cable name and type	Conductor	Jumper	Wiring	Target designation
/353.9	=4 FES 016 MO+4 FES 016 MO-X1:3	4LKD005AR/ 4FES016MO-C-01 U1000R2V 5G1.5 mm²	BN 1.5 mm²		WH 1 mm²	-Q 352 05:21
/353.9	=4 FES 016 MO+4 FES 016 MO-X1:8	4LKD005AR/ 4FES016MO-C-01 U1000R2V 5G1.5 mm²	GY 1.5 mm²		WH 1 mm²	-K 354 10:11
					WH 1 mm²	-KM 352 05:74
/353.9		4LKD005AR/ 4FES016MO-C-01 U1000R2V 5G1.5 mm²	BK 1.5 mm²		WH 1 mm²	-KM 352 05:73
					WH 1 mm²	-KM 352 07:73
					WH 1 mm²	-S 353 07.1:23
/353.15	=4 FES 016 MO+4 FES 016 MO-X1:10	4LKD005AR/ 4FES016MO-C-01 U1000R2V 5G1.5 mm²	BU 1.5 mm²		WH 1 mm²	-K 354 10:21
					WH 1 mm²	-S 353 07.1:43

Date:	17.03.2026.	SINTAKSA A Voith Company	Client:	ANDRITZ TEP d.o.o. Ulica 108. brigade ZNG 84, 35000 Slavonski Brod, Croatia	Scope: BOILER/LOW VOLTAGE CABINET BOILER (NORMAL) 5	Project: BRC-4	Unit & Issuer: ATEP0	Number: 1874	Revision: G
Drawn:	Luka Božičević								#Y
Approved:	Grga Kolić		Object:	RDF Albioma Les Bois Rouge Reunion - France	Content: Terminal diagram =4LKD001AR+4LKD005AR-X 353 09	Drawing designation: BRC-4-ATEP0-1874-G		=4LKD001AR	Sheet: 608
Format:	A3							+4LKD005AR	Next: 609

Terminal diagram

Strip

=4LKD001AR+4LKD005AR-X 355 06

A SIDE						B SIDE
Placement	Target designation	Cable name and type	Conductor	Jumper	Wiring	Target designation
				1		
				2	RD 1 mm²	-KM 352 05:83
/355.11	=4 FES 016 MO+4 FES 016 MO-X1:5:A	4LKD005AR/ 4FES016MO-C-02 U1000R2V 7G1.5 mm²	1 1.5 mm²	3		
				4	3 1.5 mm²	=4 FES 016 MO+4 FES 016
				5	RD 1 mm²	-KM 352 05:84
				6	RD 1 mm²	-KM 352 07:84
/355.11	=4 FES 016 MO+4 FES 016 MO-X1:6:A	4LKD005AR/ 4FES016MO-C-02 U1000R2V 7G1.5 mm²	2 1.5 mm²	7	RD 1 mm²	-K 354 10:31
				8	RD 1 mm²	-S 353 07.1:54
				9		
				10		
				11		
				12		
				13	4 1.5 mm²	=4 FES 016 MO+4 FES 016
				14		
				15		
				16		

Date:	17.03.2026.	SINTAKSA A Voith Company	Client:	ANDRITZ TEP d.o.o. Ulica 108. brigade ZNG 84, 35000 Slavonski Brod, Croatia	Scope: BOILER/LOW VOLTAGE CABINET BOILER (NORMAL) 5	Project: BRC-4	Unit & Issuer: ATEP0	Number: 1874	Revision: G
Drawn:	Luka Božičević								#Y
Approved:	Grga Kolić		Object:	RDF Albioma Les Bois Rouge Reunion - France	Content: Terminal diagram =4LKD001AR+4LKD005AR-X 355 06	Drawing designation: BRC-4-ATEP0-1874-G			=4LKD001AR
Format:	A3								+4LKD005AR

Sheet: 609
Next: 610

Terminal diagram

Strip

=4LKD001AR+4LKD005AR-X 357 05

A SIDE								B SIDE
Placement	Target designation	Cable name and type	Conductor	Jumper		Wiring	Target designation	
/357.5	=4 FES 018 MO+4 FES 018 MO-M53:U1	4LKD005AR/ 4FES018MO-B-01 U1000R2V 4x2.5 mm²	BN 2.5 mm²	'	1	BK 2.5 mm²	-KM 357 05:2/T1	
/357.5	=4 FES 018 MO+4 FES 018 MO-M53:V1	4LKD005AR/ 4FES018MO-B-01 U1000R2V 4x2.5 mm²	BK 2.5 mm²	'	2	BK 2.5 mm²	-KM 357 05:4/T2	
/357.5	=4 FES 018 MO+4 FES 018 MO-M53:W1	4LKD005AR/ 4FES018MO-B-01 U1000R2V 4x2.5 mm²	GY 2.5 mm²	'	3	BK 2.5 mm²	-KM 357 05:6/T3	

Date:	17.03.2026.	SINTAKSA A Voith Company	Client:	ANDRITZ TEP d.o.o. Ulica 108. brigade ZNG 84, 35000 Slavonski Brod, Croatia	Scope: BOILER/LOW VOLTAGE CABINET BOILER (NORMAL) 5	Project: BRC-4	Unit & Issuer: ATEP0	Number: 1874	Revision: G
Drawn:	Luka Božičević								#Y
Approved:	Grga Kolić		Object:	RDF Albioma Les Bois Rouge Reunion - France	Content: Terminal diagram =4LKD001AR+4LKD005AR-X 357 05	Drawing designation: BRC-4-ATEP0-1874-G			=4LKD001AR
Format:	A3								+4LKD005AR

Sheet: 610

Next: 611

Terminal diagram

Strip

=4LKD001AR+4LKD005AR-X 358 09

A SIDE							B SIDE
Placement	Target designation	Cable name and type	Conductor	Jumper		Wiring	Target designation
/358.9	=4 FES 018 MO+4 FES 018 MO-X1:3	4LKD005AR/ 4FES018MO-C-01 U1000R2V 5G1.5 mm²	BN 1.5 mm²		1	WH 1 mm²	-Q 357 05:21
/358.9	=4 FES 018 MO+4 FES 018 MO-X1:8	4LKD005AR/ 4FES018MO-C-01 U1000R2V 5G1.5 mm²	GY 1.5 mm²		2	WH 1 mm²	-K 359 10:11
					3	WH 1 mm²	-KM 357 05:74
/358.9		4LKD005AR/ 4FES018MO-C-01 U1000R2V 5G1.5 mm²	BK 1.5 mm²		4	WH 1 mm²	-KM 357 05:73
					5	WH 1 mm²	-KM 357 07:73
					6	WH 1 mm²	-S 358 07.1:23
/358.15	=4 FES 018 MO+4 FES 018 MO-X1:10	4LKD005AR/ 4FES018MO-C-01 U1000R2V 5G1.5 mm²	BU 1.5 mm²		7	WH 1 mm²	-K 359 10:21
					8		
					9		
					10	WH 1 mm²	-S 358 07.1:43
					11		
					12		

Date:	17.03.2026.	SINTAKSA A Voith Company	Client:	ANDRITZ TEP d.o.o. Ulica 108. brigade ZNG 84, 35000 Slavonski Brod, Croatia	Scope: BOILER/LOW VOLTAGE CABINET BOILER (NORMAL) 5	Project: BRC-4	Unit & Issuer: ATEP0	Number: 1874	Revision: G
Drawn:	Luka Božičević								#Y
Approved:	Grga Kolić		Object:	RDF Albioma Les Bois Rouge Reunion - France	Content: Terminal diagram =4LKD001AR+4LKD005AR-X 358 09	Drawing designation: BRC-4-ATEP0-1874-G		=4LKD001AR	Sheet: 611
Format:	A3							+4LKD005AR	Next: 612

Terminal diagram

Strip

=4LKD001AR+4LKD005AR-X 360 06

A SIDE						B SIDE
Placement	Target designation	Cable name and type	Conductor	Jumper	Wiring	Target designation
				1		
				2	RD 1 mm²	-KM 357 05:83
/360.11	=4 FES 018 MO+4 FES 018 MO-X1:5:A	4LKD005AR/ 4FES018MO-C-02 U1000R2V 7G1.5 mm²	1 1.5 mm²	3		
				4	3 1.5 mm²	=4 FES 018 MO+4 FES 018
				5	RD 1 mm²	-KM 357 05:84
				6	RD 1 mm²	-KM 357 07:84
/360.11	=4 FES 018 MO+4 FES 018 MO-X1:6:A	4LKD005AR/ 4FES018MO-C-02 U1000R2V 7G1.5 mm²	2 1.5 mm²	7	RD 1 mm²	-K 359 10:31
				8	RD 1 mm²	-S 358 07.1:54
				9		
				10		
				11		
				12		
				13	4 1.5 mm²	=4 FES 018 MO+4 FES 018
				14		
				15		
				16		

Date:	17.03.2026.	SINTAKSA A Voith Company	Client: ANDRITZ TEP d.o.o. Ulica 108. brigade ZNG 84, 35000 Slavonski Brod, Croatia	Scope: BOILER/LOW VOLTAGE CABINET BOILER (NORMAL) 5	Project: BRC-4	Unit & Issuer: ATEP0	Number: 1874	Revision: G
Drawn:	Luka Božičević							#Y
Approved:	Grga Kolić		Object: RDF Albioma Les Bois Rouge Reunion - France	Content: Terminal diagram =4LKD001AR+4LKD005AR-X 360 06	Drawing designation: BRC-4-ATEP0-1874-G			=4LKD001AR
Format:	A3							+4LKD005AR

Sheet: 612
Next: 613

Terminal diagram

Strip

=4LKD001AR+4LKD005AR-XB 362 03

A SIDE						B SIDE
Placement	Target designation	Cable name and type	Conductor	Jumper	Wiring	Target designation
+4LKD001AR/42.2	+4LKD001AR-Q 042 02:4		GY 1 mm²	1	GY 1 mm²	-HL 343 02:2
				2	GY 1 mm²	-HL 348 02:2
				3	GY 1 mm²	-HL 353 02:2
				4	GY 1 mm²	-HL 358 02:2
				5		
+4LKD006AR/442.3	+4LKD006AR-XB 442 03:1:A		GY 1 mm²	6		

Date:	17.03.2026.	SINTAKSA A Voith Company	Client:	ANDRITZ TEP d.o.o. Ulica 108. brigade ZNG 84, 35000 Slavonski Brod, Croatia	Scope: BOILER/LOW VOLTAGE CABINET BOILER (NORMAL) 5	Project: BRC-4	Unit & Issuer: ATEP0	Number: 1874	Revision: G
Drawn:	Luka Božičević								#Y
Approved:	Grga Kolić		Object:	RDF Albioma Les Bois Rouge Reunion - France	Content: Terminal diagram =4LKD001AR+4LKD005AR-XB 362 03	Drawing designation: BRC-4-ATEP0-1874-G			=4LKD001AR
Format:	A3								+4LKD005AR

Sheet: 613

Next: 614

Terminal diagram

Strip

=4LKD001AR+4LKD005AR-XS 381 03

A SIDE						B SIDE
Placement	Target designation	Cable name and type	Conductor	Jumper	Wiring	Target designation
				1		
				2	RD 1 mm²	-QB 341 09:11
				3		
				4	RD 1 mm²	-QB 341 09:14
				5		
				6		
				7		
				8		
				9		
				10		

Date:	17.03.2026.	SINTAKSA A Voith Company	Client:	ANDRITZ TEP d.o.o. Ulica 108. brigade ZNG 84, 35000 Slavonski Brod, Croatia	Scope: BOILER/LOW VOLTAGE CABINET BOILER (NORMAL) 5	Project: BRC-4	Unit & Issuer: ATEP0	Number: 1874	Revision: G
Drawn:	Luka Božičević								#Y
Approved:	Grga Kolić		Object:	RDF Albioma Les Bois Rouge Reunion - France	Content: Terminal diagram =4LKD001AR+4LKD005AR-XS 381 03	Drawing designation: BRC-4-ATEP0-1874-G			=4LKD001AR
Format:	A3								+4LKD005AR

Sheet: 614

Next: 615

Terminal diagram

Strip

=4LKD001AR+4LKD005AR-XS 385 02

A SIDE						B SIDE
Placement	Target designation	Cable name and type	Conductor	Jumper	Wiring	Target designation
				1	GNYE 2.5 mm²	-PE
				2		
				3		
				4		
				5		
				6		
				7		
				8		
				9		
				10		
				11		
				12		
				13		
				14		
				15		
				16		
				17		
				18		
/385.4	=4 FES 016 MO+4 FES 016 MO-X1:?:A	4LKD005AR/ 4FES016MO-C-02 U1000R2V 7G1.5 mm²	5 1.5 mm²	19		
/385.5	=4 FES 016 MO+4 FES 016 MO-X1:?:A	4LKD005AR/ 4FES016MO-C-02 U1000R2V 7G1.5 mm²	6 1.5 mm²	20		
/385.10	=4 FES 018 MO+4 FES 018 MO-X1:?:A	4LKD005AR/ 4FES018MO-C-02 U1000R2V 7G1.5 mm²	5 1.5 mm²	21		
/385.11	=4 FES 018 MO+4 FES 018 MO-X1:?:A	4LKD005AR/ 4FES018MO-C-02 U1000R2V 7G1.5 mm²	6 1.5 mm²	22		
/385.4	=4 FES 042 MO+4 FES 042 MO-X1:?:A	4LKD005AR/ 4FES042MO-C-02 U1000R2V 7G1.5 mm²	5 1.5 mm²	23		
/385.5	=4 FES 042 MO+4 FES 042 MO-X1:?:A	4LKD005AR/ 4FES042MO-C-02 U1000R2V 7G1.5 mm²	6 1.5 mm²	24		
/385.10	=4 FES 044 MO+4 FES 044 MO-X1:?:A	4LKD005AR/ 4FES044MO-C-02 U1000R2V 7G1.5 mm²	5 1.5 mm²	25		

Terminal diagram

Strip

=4LKD001AR+4LKD005AR-XS 385 02

A SIDE						B SIDE
Placement	Target designation	Cable name and type	Conductor	Jumper	Wiring	Target designation
/385.11	=4 FES 044 MO+4 FES 044 MO-X1:?:A	4LKD005AR/ 4FES044MO-C-02 U1000R2V 7G1.5 mm²	6 1.5 mm²	26		
				27		
				28		
				29		
				30		

Date:	17.03.2026.	SINTAKSA A Voith Company	Client:	ANDRITZ TEP d.o.o. Ulica 108. brigade ZNG 84, 35000 Slavonski Brod, Croatia	Scope: BOILER/LOW VOLTAGE CABINET BOILER (NORMAL) 5	Project: BRC-4	Unit & Issuer: ATEP0	Number: 1874	Revision: G
Drawn:	Luka Božičević								#Y
Approved:	Grga Kolić		Object:	RDF Albioma Les Bois Rouge Reunion - France	Content: Terminal diagram =4LKD001AR+4LKD005AR-XS 385 02	Drawing designation: BRC-4-ATEP0-1874-G			=4LKD001AR
Format:	A3								+4LKD005AR

Sheet: 616

Next: +4LKD006AR/1

SINTAKSA
A Voith Company

Ulica Domovinskog rata 104C,
21 000 Split, Hrvatska / Croatia
OIB: 32357958120
T: +385 1 2310 273
www.sintaksa.hr

SCHÉMA DE CÂBLAGE ÉLECTRIQUE

Projet / tâche:

RDF Albioma Les Bois Rouge
Reunion - France

Cadre:

BOILER/LOW VOLTAGE
CABINET BOILER (NORMAL)
6
+4LKD006AR

Client / acheteur:

ANDRITZ TEP d.o.o.
Ulica 108. brigade ZNG 84, 35000
Slavonski Brod, Croatia

Code du document:

BRC-4-ATEP0-1874-G

Date:
17.03.2026.

Date:	17.03.2026.	SINTAKSA A Voith Company	Client:	ANDRITZ TEP d.o.o. Ulica 108. brigade ZNG 84, 35000 Slavonski Brod, Croatia	Scope: BOILER/LOW VOLTAGE CABINET BOILER (NORMAL) 6	Project: BRC-4	Unit & Issuer: ATEP0	Number: 1874	Revision: G
Drawn:	Luka Božičević								#A
Approved:	Grga Kolić		Object:	RDF Albioma Les Bois Rouge Reunion - France	Content: TITLE PAGE	Drawing designation: BRC-4-ATEP0-1874-G			=4LKD001AR
Format:	A3								+4LKD006AR

Sheet: 1
Next: 2

Table of contents

Page number	Page description	Remarks of creator	Date	Checked by	Revision
2	TABLE OF CONTENTS		2026/06/17		
3	TABLE OF CONTENTS		2026/06/17		
401	SUMMARIZED PARTS LIST		2026/05/28		
402	SUMMARIZED PARTS LIST		2026/06/08		
421	400VAC DISTRIBUTION		2026/05/28		G
422	ASH CRUSHER BELOW ECO 1		2026/06/06		G
423	ASH CRUSHER BELOW ECO 1 - CONTROL		2026/06/15		G
424	ASH CRUSHER BELOW ECO 1 - CONTROL		2026/06/08		G
425	ASH CRUSHER BELOW ECO 1 - SIGNALIZATION		2026/06/08		G
426	ASH CRUSHER BELOW ECO 1 - SIGNALIZATION		2026/06/08		G
427	ASH CRUSHER BELOW ECO 2		2026/06/06		G
428	ASH CRUSHER BELOW ECO 2 - CONTROL		2026/06/15		G
429	ASH CRUSHER BELOW ECO 2 - CONTROL		2026/06/08		G
430	ASH CRUSHER BELOW ECO 2 - SIGNALIZATION		2026/06/08		G
431	ASH CRUSHER BELOW ECO 2 - SIGNALIZATION		2026/06/08		G
432	ROTARY DISPENSER BELOW ECO 1		2026/06/06		G
433	ROTARY DISPENSER BELOW ECO 1 - CONTROL		2026/06/15		G
434	ROTARY DISPENSER BELOW ECO 1 - CONTROL		2026/06/06		G
435	ROTARY DISPENSER BELOW ECO 1 - SIGNALIZATION		2026/06/08		G
436	ROTARY DISPENSER BELOW ECO 1 - SIGNALIZATION		2026/06/08		G
437	ROTARY DISPENSER BELOW ECO 2		2026/06/06		G
438	ROTARY DISPENSER BELOW ECO 2 - CONTROL		2026/06/15		G
439	ROTARY DISPENSER BELOW ECO 2 - CONTROL		2026/06/06		G
440	ROTARY DISPENSER BELOW ECO 2 - SIGNALIZATION		2026/06/08		G
441	ROTARY DISPENSER BELOW ECO 2 - SIGNALIZATION		2026/06/08		G
442	LAMP TEST		2026/06/06		G
461	SIGNALIZATION		2026/06/08		G
465	SPARE		2026/06/10		G
471	COMMUNICATION		2026/05/28		G
488	Terminal diagram =4LKD001AR+4LKD006AR-X 422 05		2026/05/28		F
489	Terminal diagram =4LKD001AR+4LKD006AR-X 423 09		2026/05/28		F
490	Terminal diagram =4LKD001AR+4LKD006AR-X 425 06		2026/05/28		F
491	Terminal diagram =4LKD001AR+4LKD006AR-X 427 05		2026/05/28		F

Table of contents

Page number	Page description	Remarks of creator	Date	Checked by	Revision
492	Terminal diagram =4LKD001AR+4LKD006AR-X 428 09		2026/05/28		F
493	Terminal diagram =4LKD001AR+4LKD006AR-X 430 06		2026/05/28		F
494	Terminal diagram =4LKD001AR+4LKD006AR-X 432 05		2026/05/28		F
495	Terminal diagram =4LKD001AR+4LKD006AR-X 433 09		2026/05/28		F
496	Terminal diagram =4LKD001AR+4LKD006AR-X 435 06		2026/05/28		F
497	Terminal diagram =4LKD001AR+4LKD006AR-X 437 05		2026/05/28		F
498	Terminal diagram =4LKD001AR+4LKD006AR-X 438 09		2026/05/28		F
499	Terminal diagram =4LKD001AR+4LKD006AR-X 440 06		2026/05/28		F
500	Terminal diagram =4LKD001AR+4LKD006AR-XB 442 03		2026/05/28		F
501	Terminal diagram =4LKD001AR+4LKD006AR-XS 461 03		2026/05/28		F
502	Terminal diagram =4LKD001AR+4LKD006AR-XS 465 02		2026/05/28		F
503	Terminal diagram =4LKD001AR+4LKD006AR-XS 465 02		2026/05/28		F

Sorting number	Part number	Quantity	Manufacturer	Device	Device description	Device designation
1.	SOC.47290126	1	Socomec	Module location default ISOM DIGIWARE F-60	Network type - Power distribution, Control circuits, Medical Rated voltage - 24 VDC Type - Insulation Fault Locator Indication - Digital	-BE 471 06
2.	SE.ZB4BVBG1	12	Schneider Electric	white light block with body/fixing collar integral LED 24...120VAC/DC		-HL 423 02...-HL 423 04;-HL 428 02...-HL 428 04;-HL 433 02...-HL 433 04;-HL 438 02...-HL 438 04
3.	SE.ZB4BV043	8	Schneider Electric	Red pilot light head Ø22 plain lens for integral LED	Complete body light block assembly, Harmony XB4, metal, universal LED, body fixing collar, 24...120V AC DC Head for pilot light: Red	-HL 423 02;-HL 423 03;-HL 428 02;-HL 428 03;-HL 43 3 02;-HL 433 03;-HL 438 02;-HL 438 03
4.	SE.ZBZ32	12	Schneider Electric	Harmony XB4	Legend holder, plastic	-HL 423 02...-HL 423 04;-HL 428 02...-HL 428 04;-HL 433 02...-HL 433 04;-HL 438 02...-HL 438 04
5.	SE.ZB4BV053	4	Schneider Electric	Orange pilot light head Ø22 plain lens for integral LED	Complete body light block assembly, Harmony XB4, metal, universal LED, body fixing collar, 24...120V AC DC Head for pilot light: Orange	-HL 423 04;-HL 428 04;-HL 433 04;-HL 438 04
6.	SE.RXM4AB2P7	10	Schneider Electric	Miniature Plug-in relay - Zelio RXM 4 C/O 230 V AC 6 A with LED	Miniature Plug-in relay - Zelio RXM 4 C/O 230 V AC 6 A with LED	-K 424 07;-K 424 09;-K 424 11;-K 429 07;-K 429 09;-K 429 11;-K 434 08;-K 434 10;-K 439 08;-K 439 10
7.	SE.RXZE2S114M	10	Schneider Electric	Socket	For RXM2/RXM4 relays Screw connectors Separate contact 4 C/O	-K 424 07;-K 424 09;-K 424 11;-K 429 07;-K 429 09;-K 429 11;-K 434 08;-K 434 10;-K 439 08;-K 439 10
8.	SE.RXM041FU7	10	Schneider Electric	Protection module	RC circuit - 110..240 V AC - for RPZ/RXZ sockets	-K 424 07;-K 424 09;-K 424 11;-K 429 07;-K 429 09;-K 429 11;-K 434 08;-K 434 10;-K 439 08;-K 439 10
9.	SE.LC1D12P7	8	Schneider Electric	Contactor TeSys LC1-D - 3P - AC-3 440V 12 A, Coil 230 V AC	Contactor TeSys LC1-D - 3P - AC-3 440V 18 A, Coil 230 V AC	-KM 422 05;-KM 422 07;-KM 427 05;-KM 427 07;-KM 4 32 05;-KM 432 07;-KM 437 05;-KM 437 07
10.	SE.LADN31	8	Schneider Electric	Auxiliary contact block TeSys - 3 NO + 1 NC,screw-clamps terminals	Auxiliary contact block TeSys - 3 NO + 1 NC,screw-clamps terminals	-KM 422 05;-KM 422 07;-KM 427 05;-KM 427 07;-KM 4 32 05;-KM 432 07;-KM 437 05;-KM 437 07
11.	SE.LAD4RCU	8	Schneider Electric	RC Transient Suppressor 110 TO 250 VAC	RC Transient Suppressor 110 TO 250 VAC	-KM 422 05;-KM 422 07;-KM 427 05;-KM 427 07;-KM 4 32 05;-KM 432 07;-KM 437 05;-KM 437 07
12.	SE.LAD9R1V	4	Schneider Electric	Reversing mechanical interlock kit	Tesys D, reversing mechanical interlock kit, with electrical interlocking, for LC1D09 to LC1D38	-KM 422 05;-KM 427 05;-KM 432 05;-KM 437 05
13.	SE.GV2P14	4	Schneider Electric	Motor circuit breaker	3-pole 6-10 A Thermal-magnetic	-Q 422 05;-Q 427 05;-Q 432 05;-Q 437 05
14.	SE.GVAE11	4	Schneider Electric	Auxiliary contact block	1NO+1NC Front mounting For GV2	-Q 422 05;-Q 427 05;-Q 432 05;-Q 437 05
15.	SE.GVAD0110	4	Schneider Electric	TeSys GV AD0110 - auxiliary contact - 1 NO + 1 NC (fault)		-Q 422 05;-Q 427 05;-Q 432 05;-Q 437 05
16.	SE.A9F74202	8	Schneider Electric	2-pole MCB, 2A/C	Nominal current: 2 A Tripping curve: C	-Q 423 04;-Q 424 07;-Q 428 04;-Q 429 07;-Q 433 04;-Q 434 08;-Q 438 04;-Q 439 08
17.	SIE.3RW4024-1BB14	2	Siemens	SIRIUS Soft starter	SIRIUS soft starter S0 12.5 A, 5.5 kW/400 V, 40 °C 200-480 V AC, 110-230 V AC/DC Screw terminals	-QA 422 04;-QA 427 04
18.	SE.C10F3TM032	1	Schneider Electric	Circuit breaker, ComPacT NSX100B	36kA/415VAC 3 poles TMD trip unit 32A	-QB 421 09
19.	SE.29450	1	Schneider Electric	Auxiliary contact 1 OF or 1 SD or 1 SDE or 1 SDV	Auxiliary contact 1 OF or 1 SD or 1 SDE or 1 SDV	-QB 421 09
20.	SE.LV429337T	1	Schneider Electric	Direct rotary handle, ComPacT NSX 100/160/250, black handle, IP40	Direct rotary handle, ComPacT NSX 100/160/250, black handle, IP40	-QB 421 09
21.	SE.LVS04033	1	Schneider Electric	LINERGY DP	LINERGY DP 3P D.BLK/COMPACT 250A 27HOLES	-QB 421 09
22.	SE.LV429517	1	Schneider Electric	Insulation accessories 1 long terminal shield for breaker or plug-in base, 3P - NSX100...250	Insulation accessories 1 long terminal shield for breaker or plug-in base, 3P - NSX100...250	-QB 421 09

Sorting number	Part number	Quantity	Manufacturer	Device	Device description	Device designation
23.	PXC.2950129	1	Phoenix Contact	Component for protective circuit	Diode module, with 14 diodes, common anode, diode type 1N 4007	-R 442 03
24.	PXC.2954882	1	Phoenix Contact	Diode block	Diode module, with eight diodes, common anode, diode type 1N 5408	-R 442 07
25.	PXC.2950116	1	Phoenix Contact	Component for protective circuit	Diode module, with 14 diodes, common cathode, diode type 1N 4007	-R 442 10
26.	PXC.2954879	1	Phoenix Contact	Component for protective circuit	Diode module, with eight diodes, common cathode, diode type 1N 5408	-R 442 14
27.	SE.XPSBAC34AP	8	Schneider Electric	Safety module	Harmony Safety Automation Estop or guard ,Harmony XPS, connected to supply terminals 48-240 V AC/DC , no inputs, screw	-RP 423 06;-RP 423 12;-RP 428 06;-RP 428 12;-RP 43 3 06;-RP 433 12;-RP 438 05;-RP 438 11
28.	SE.XB4BD33	8	Schneider Electric	Selector switch, BLACK, 1-0-2, 2NO	Metal Black Ø22 3 positions 2 NO	-S 423 07;-S 423 07.1;-S 428 07;-S 428 07.1;-S 433 0 7;-S 433 07.1;-S 438 07;-S 438 07.1
29.	SE.ZBE101	12	Schneider Electric	Single contact block NO	Harmony XB4 Silver alloy 1 NO	-S 423 07.1;-S 428 07.1;-S 433 07.1;-S 438 07.1
30.	SE.ZB4BA2	2	Schneider Electric	black flush pushbutton head Ø22 spring return unmarked	black flush pushbutton head Ø22 spring return unmarked	-S 424 11;-S 429 11
31.	SE.ZB4BZ102	2	Schneider Electric	single contact block with body/fixing collar 1NC screw clamp termil	single contact block with body/fixing collar 1NC screw clamp termil	-S 424 11;-S 429 11
32.	SOC.47506015	4	Socomec	TORES LOCATION SENSOR DELTA IP-15 (15mm)	Maximal diameter of cable: 15mm	-TC 422 05;-TC 427 05;-TC 432 05;-TC 437 05
33.	SOC.47290590	4	Socomec	ISOM T-15	Connection adaptor ISOM T-15 to ISOM Digiware F-60 modules	-TC 422 05;-TC 427 05;-TC 432 05;-TC 437 05
34.	PXC.3209510	173	Phoenix Contact	PT 2,5 - Feed-through terminal block	Feed-through terminal block, nom. voltage: 800 V, nominal current: 24 A, number of connections: 2, number of positions: 1, connection method: Push-in connection, Rated cross section: 2.5 mm2, cross section: 0.14 mm2 - 4 mm2, mounting type: NS 35/7,5, NS 35/15, color: gray	-X 422 05;-X 423 09;-X 425 06;-X 427 05;-X 428 09;-X 430 06;-X 432 05;-X 433 09;-X 435 06;-X 437 05;-X 4 38 09;-X 440 06;-XB 442 03;-XS 461 03;-XS 465 02

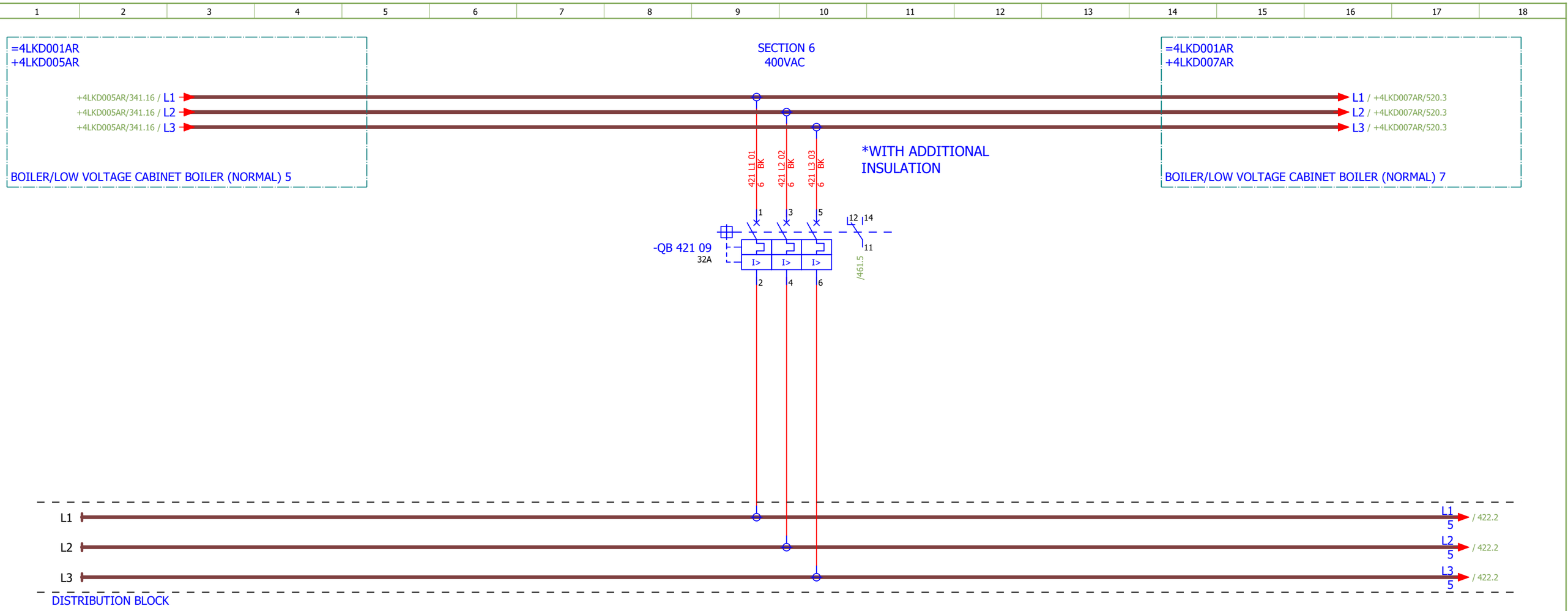

NOTE:
Conducteur de phase L1 avec manchon noir
Conducteur de phase L2 avec manchon marron
Conducteur de phase L3 avec manchon rouge

Date:	17.03.2026.	SINTAKSA A Voith Company	Client:	ANDRITZ TEP d.o.o. Ulica 108. brigade ZNG 84, 35000 Slavonski Brod, Croatia	Scope: BOILER/LOW VOLTAGE CABINET BOILER (NORMAL) 6	Project: BRC-4	Unit & Issuer: ATEP0	Number: 1874	Revision: G
Drawn:	Luka Božičević								#D
Approved:	Grga Kolić		Object:	RDF Albioma Les Bois Rouge Reunion - France	Content: 400VAC DISTRIBUTION	Drawing designation: BRC-4-ATEP0-1874-G			=4LKD001AR
Format:	A3								+4LKD006AR

Sheet: 421
Next: 422

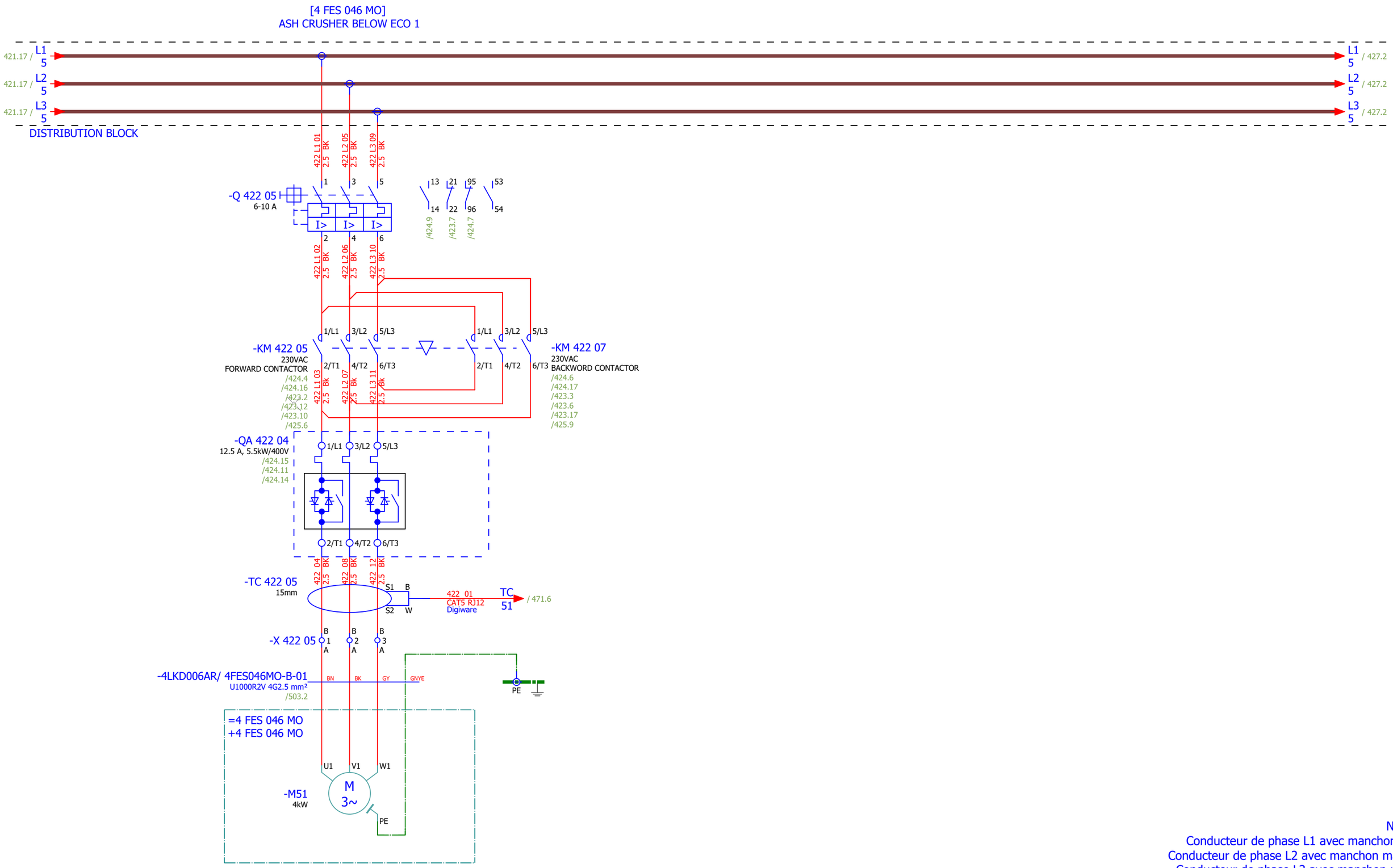

NOTE:
Conducteur de phase L1 avec manchon noir
Conducteur de phase L2 avec manchon marron
Conducteur de phase L3 avec manchon rouge

Date:	17.03.2026.	SINTAKSA A Voith Company	Client:	ANDRITZ TEP d.o.o. Ulica 108. brigade ZNG 84, 35000 Slavonski Brod, Croatia	Scope: BOILER/LOW VOLTAGE CABINET BOILER (NORMAL) 6	Project: BRC-4	Unit & Issuer: ATEP0	Number: 1874	Revision: G
Drawn:	Luka Božičević								#D
Approved:	Grga Kolić		Object:	RDF Albioma Les Bois Rouge Reunion - France	Content: ASH CRUSHER BELOW ECO 1	Drawing designation: BRC-4-ATEP0-1874-G		=4LKD001AR	Sheet: 422
Format:	A3							+4LKD006AR	Next: 423

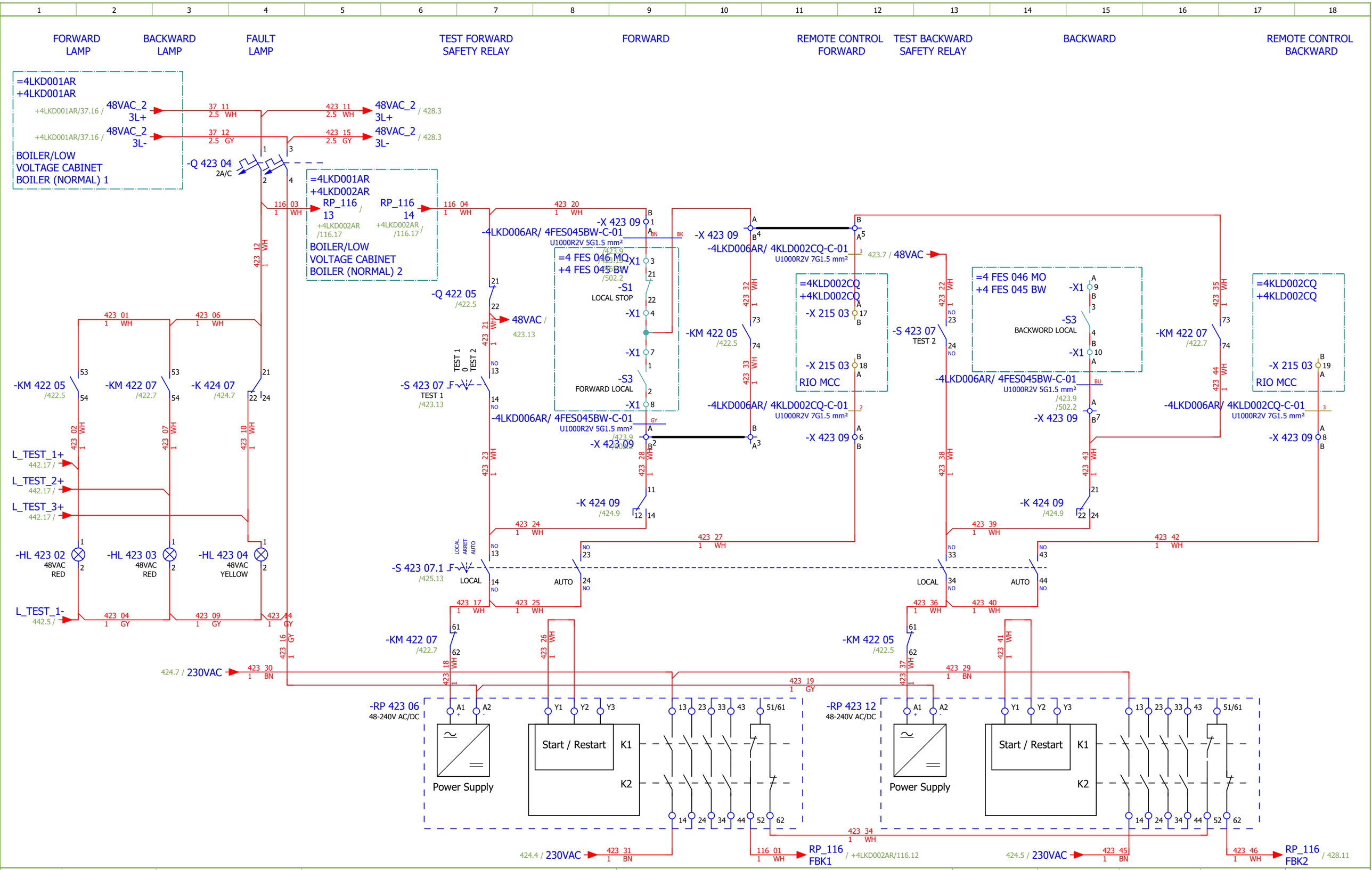

Date:	17.03.2026.	SINTAKSA A Voith Company	Client:	ANDRITZ TEP d.o.o. Ulica 108. brigade ZNG 84, 35000 Slavonski Brod, Croatia	Scope:	BOILER/LOW VOLTAGE CABINET BOILER (NORMAL) 6	Project: BRC-4	Unit & Issuer: ATEP0	Number: 1874	Revision: G	#D
Drawn:	Luka Božičević										
Approved:	Grga Kolić		Object:	RDF Albioma Les Bois Rouge Reunion - France	Content:	ASH CRUSHER BELOW ECO 1 - CONTROL	Drawing designation: BRC-4-ATEP0-1874-G			=4LKD001AR	Sheet: 423
Format:	A3									+4LKD006AR	Next: 424

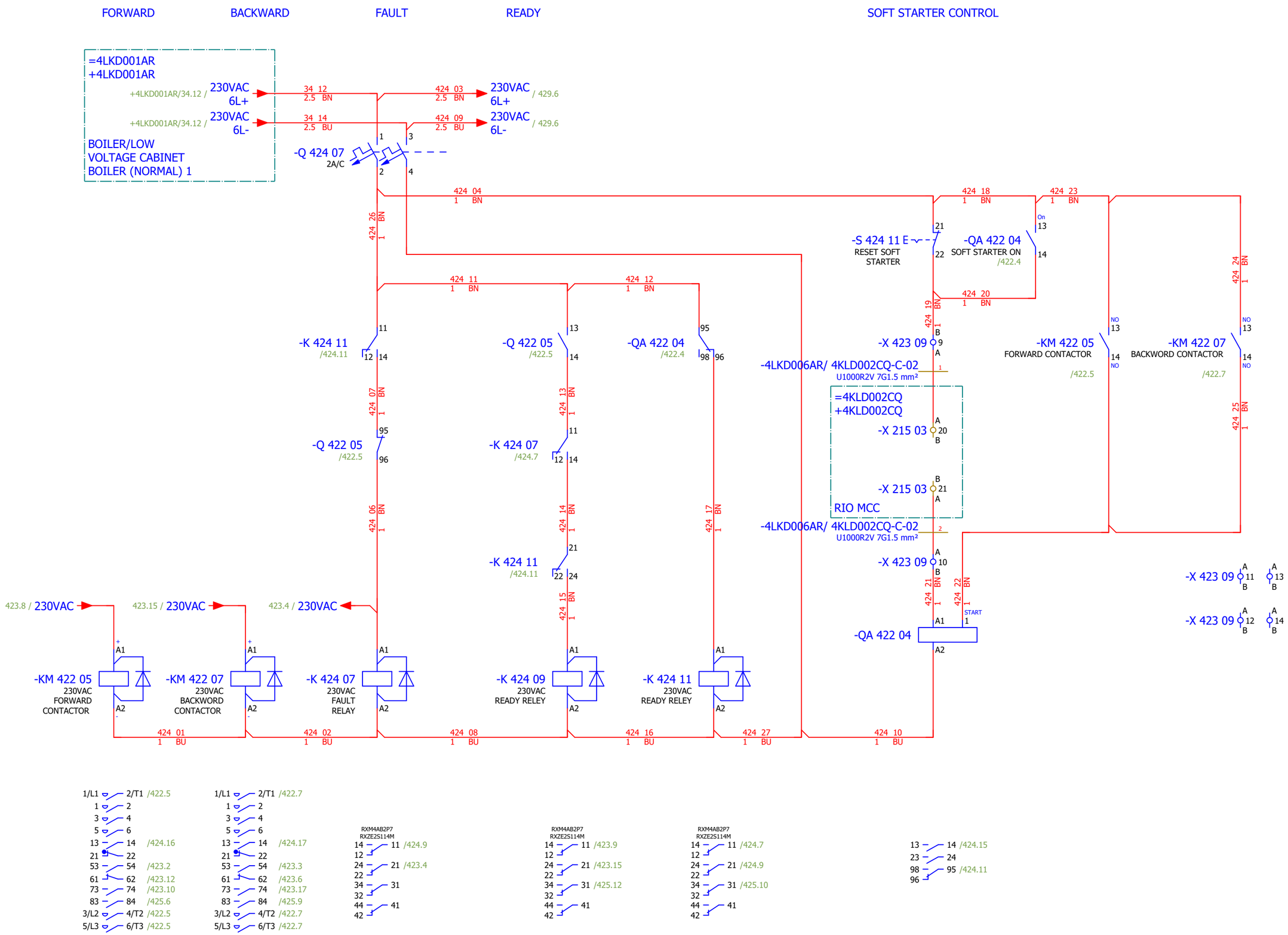

Date:	17.03.2026.	SINTAKSA A Voith Company	Client: ANDRITZ TEP d.o.o. Ulica 108. brigade ZNG 84, 35000 Slavonski Brod, Croatia	Scope: BOILER/LOW VOLTAGE CABINET BOILER (NORMAL) 6	Project: BRC-4	Unit & Issuer: ATEP0	Number: 1874	Revision: G	
Drawn:	Luka Božičević								#D
Approved:	Grga Kolić		Object: RDF Albioma Les Bois Rouge Reunion - France	Content: ASH CRUSHER BELOW ECO 1 - CONTROL	Drawing designation: BRC-4-ATEP0-1874-G			=4LKD001AR	Sheet: 424
Format:	A3							+4LKD006AR	Next: 425

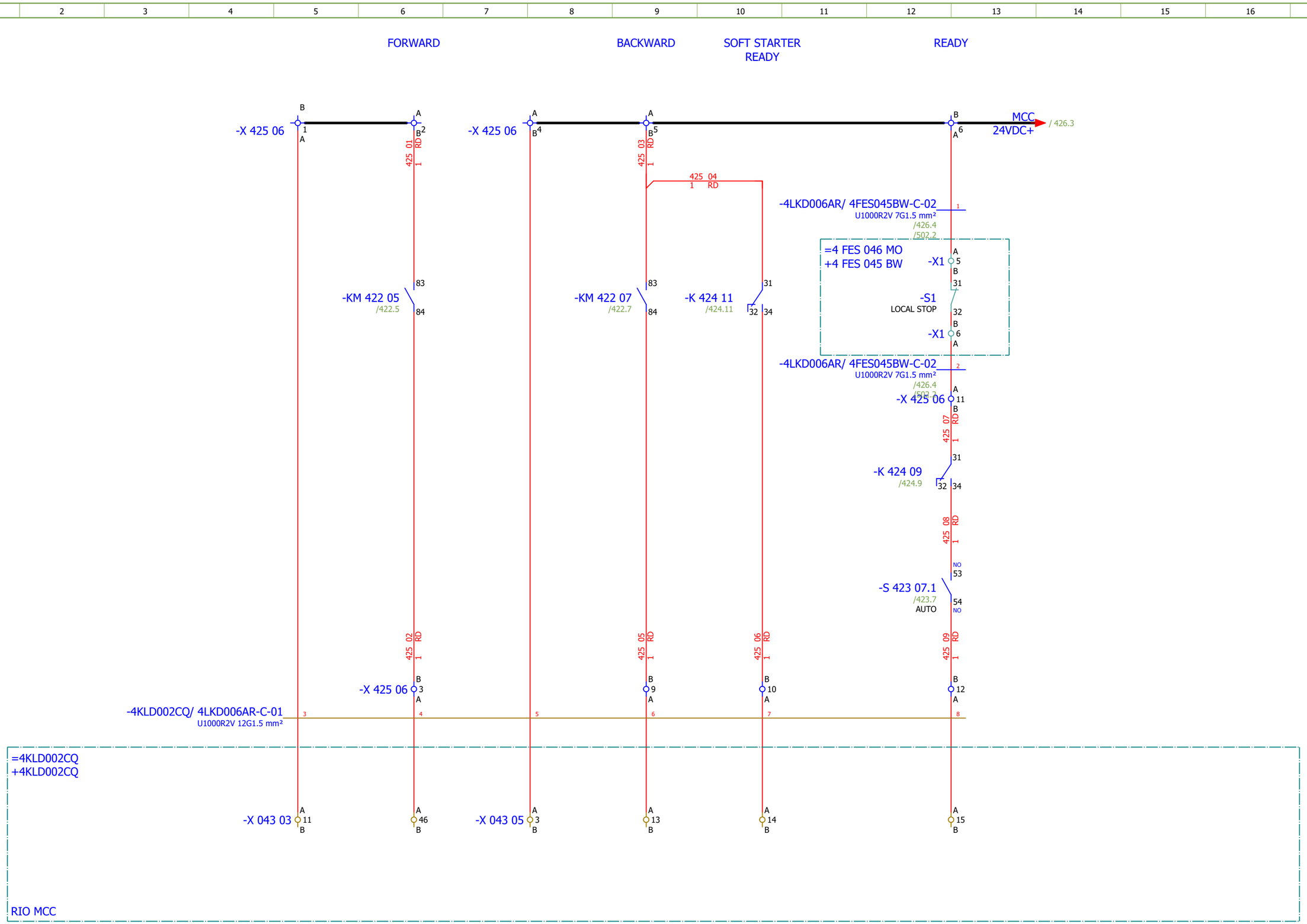

Date:	17.03.2026.	SINTAKSA A Voith Company	Client:	ANDRITZ TEP d.o.o. Ulica 108. brigade ZNG 84, 35000 Slavonski Brod, Croatia	Scope:	BOILER/LOW VOLTAGE CABINET BOILER (NORMAL) 6	Project: BRC-4	Unit & Issuer: ATEP0	Number: 1874	Revision: G
Drawn:	Luka Božičević									#D
Approved:	Grga Kolić		Object:	RDF Albioma Les Bois Rouge Reunion - France	Content:	ASH CRUSHER BELOW ECO 1 - SIGNALIZATION	Drawing designation: BRC-4-ATEP0-1874-G			=4LKD001AR
Format:	A3									+4LKD006AR

Sheet: 425
Next: 426

ASH CRUSHER BELOW ECO
1 - "0" PULSE

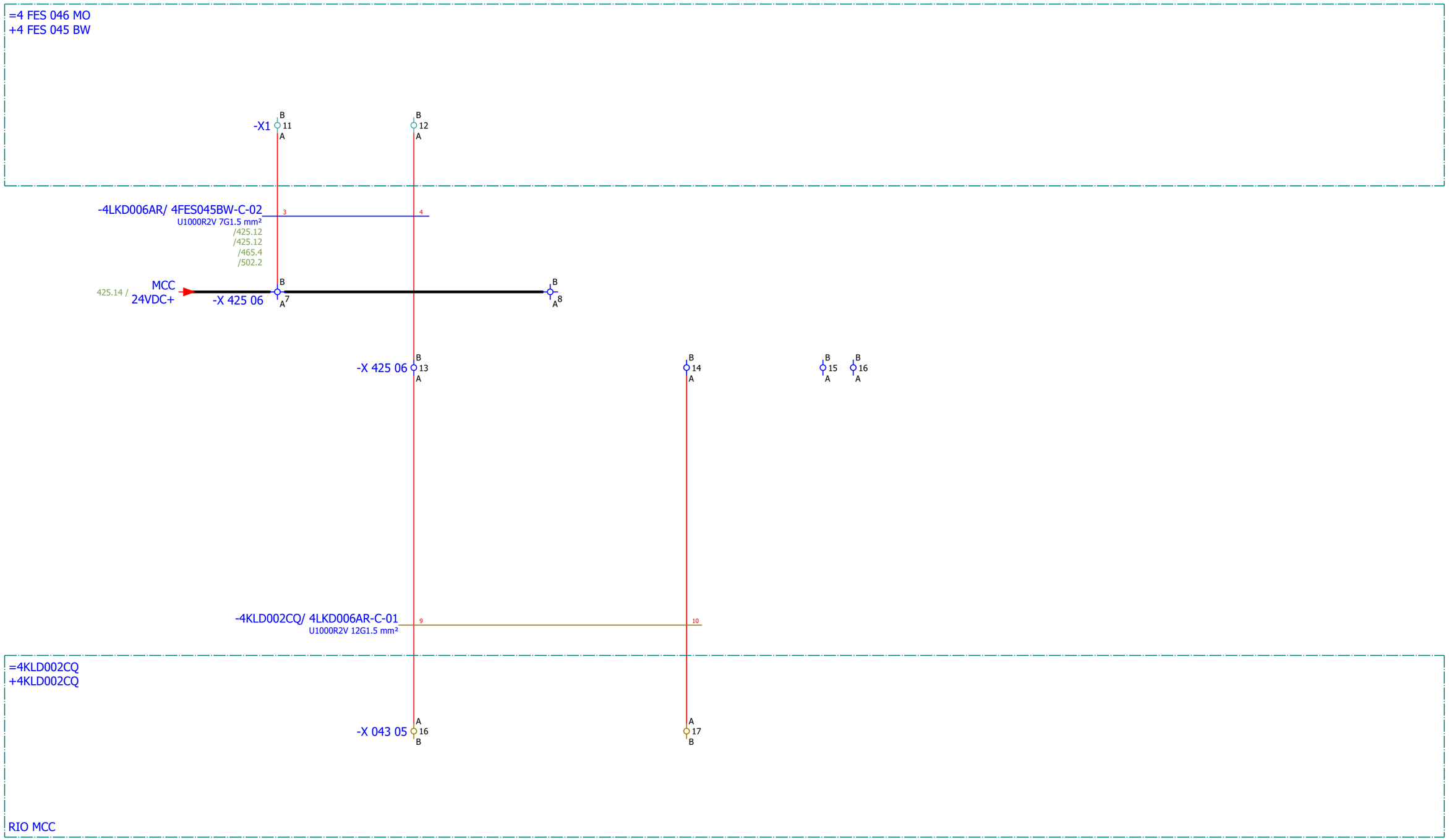

Date:	17.03.2026.	SINTAKSA A Voith Company	Client: ANDRITZ TEP d.o.o. Ulica 108. brigade ZNG 84, 35000 Slavonski Brod, Croatia	Scope: BOILER/LOW VOLTAGE CABINET BOILER (NORMAL) 6	Project: BRC-4	Unit & Issuer: ATEP0	Number: 1874	Revision: G	
Drawn:	Luka Božičević								#D
Approved:	Grga Kolić		Object: RDF Albioma Les Bois Rouge Reunion - France	Content: ASH CRUSHER BELOW ECO 1 - SIGNALIZATION	Drawing designation: BRC-4-ATEP0-1874-G			=4LKD001AR	Sheet: 426
Format:	A3							+4LKD006AR	Next: 427

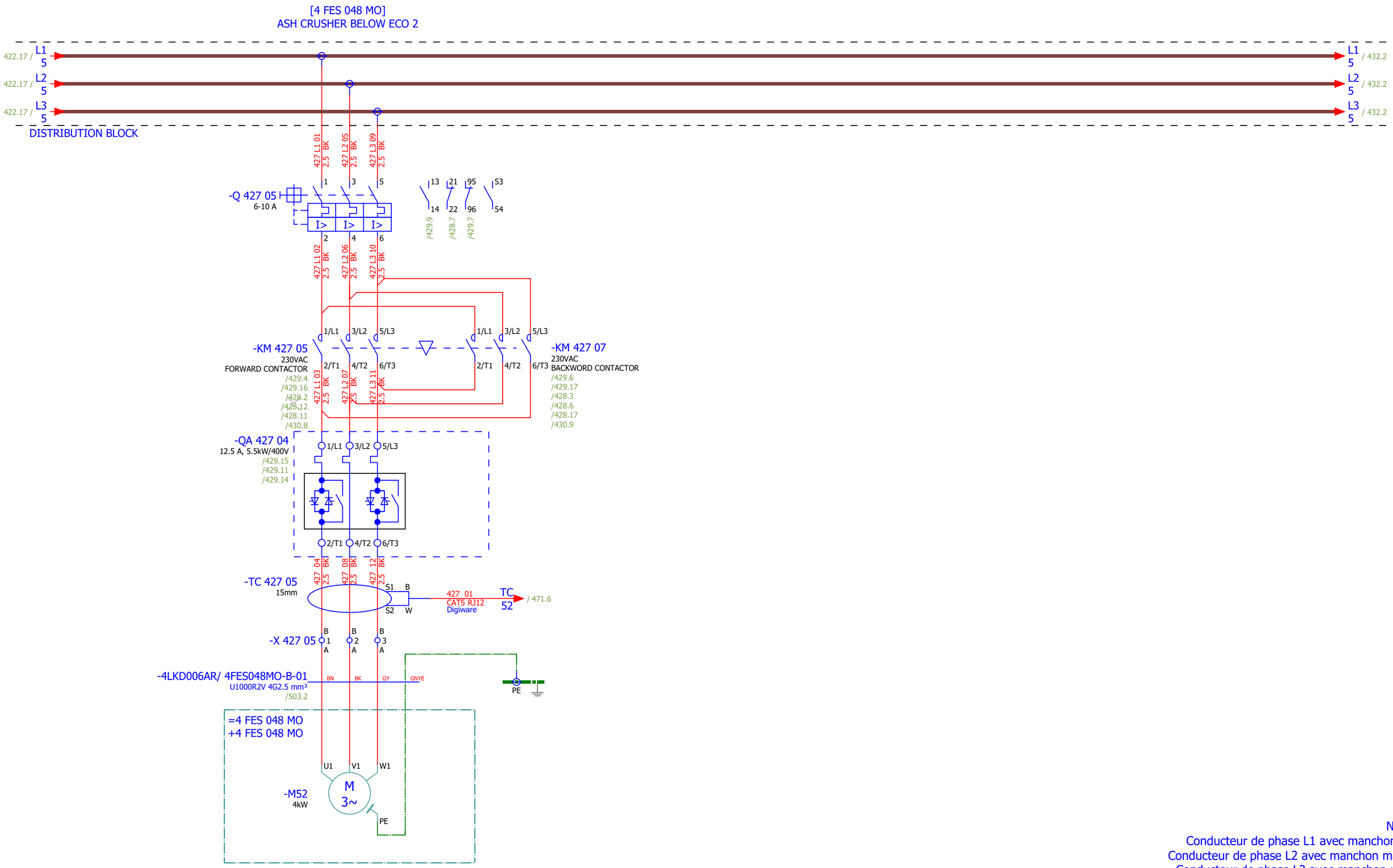

NOTE:
Conducteur de phase L1 avec manchon noir
Conducteur de phase L2 avec manchon marron
Conducteur de phase L3 avec manchon rouge

Date:	17.03.2026.	SINTAKSA A Voith Company	Client:	ANDRITZ TEP d.o.o. Ulica 108. brigade ZNG 84, 35000 Slavonski Brod, Croatia	Scope: BOILER/LOW VOLTAGE CABINET BOILER (NORMAL) 6	Project: BRC-4	Unit & Issuer: ATEP0	Number: 1874	Revision: G
Drawn:	Luka Božičević								#D
Approved:	Grga Kolić		Object:	RDF Albioma Les Bois Rouge Reunion - France	Content: ASH CRUSHER BELOW ECO 2	Drawing designation: BRC-4-ATEP0-1874-G		=4LKD001AR	Sheet: 427
Format:	A3							+4LKD006AR	Next: 428

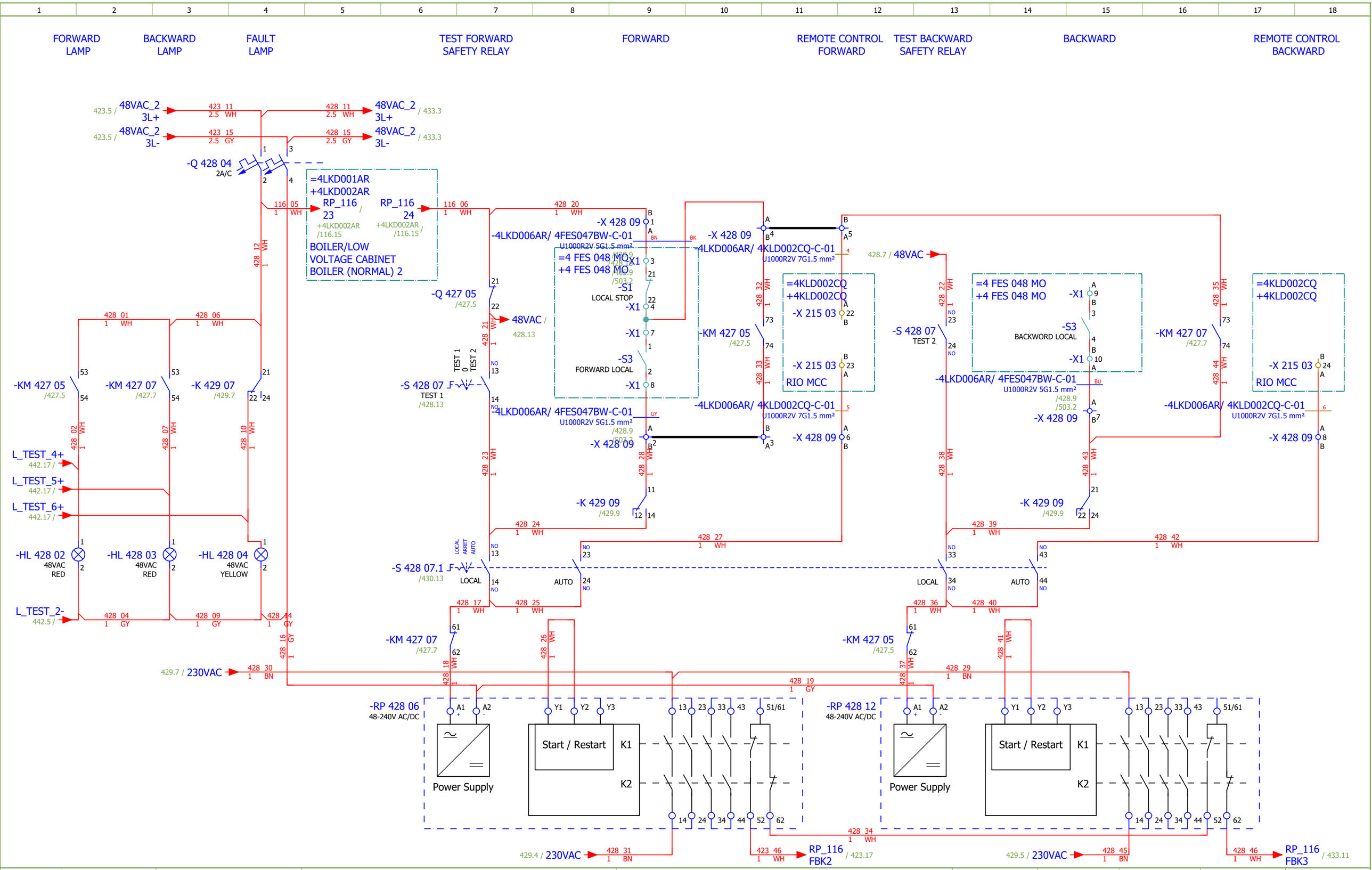

Date:	17.03.2026.	SINTAKSA A Voith Company	Client:	ANDRITZ TEP d.o.o. Ulica 108. brigade ZNG 84, 35000 Slavonski Brod, Croatia	Scope:	BOILER/LOW VOLTAGE CABINET BOILER (NORMAL) 6	Project: BRC-4	Unit & Issuer: ATEP0	Number: 1874	Revision: G
Drawn:	Luka Božičević		Object:	RDF Albioma Les Bois Rouge Reunion - France	Content:	ASH CRUSHER BELOW ECO 2 - CONTROL	Drawing designation: BRC-4-ATEP0-1874-G			=4LKD001AR
Approved:	Grga Kolić									+4LKD006AR
Format:	A3									#D
										Sheet: 428
										Next: 429

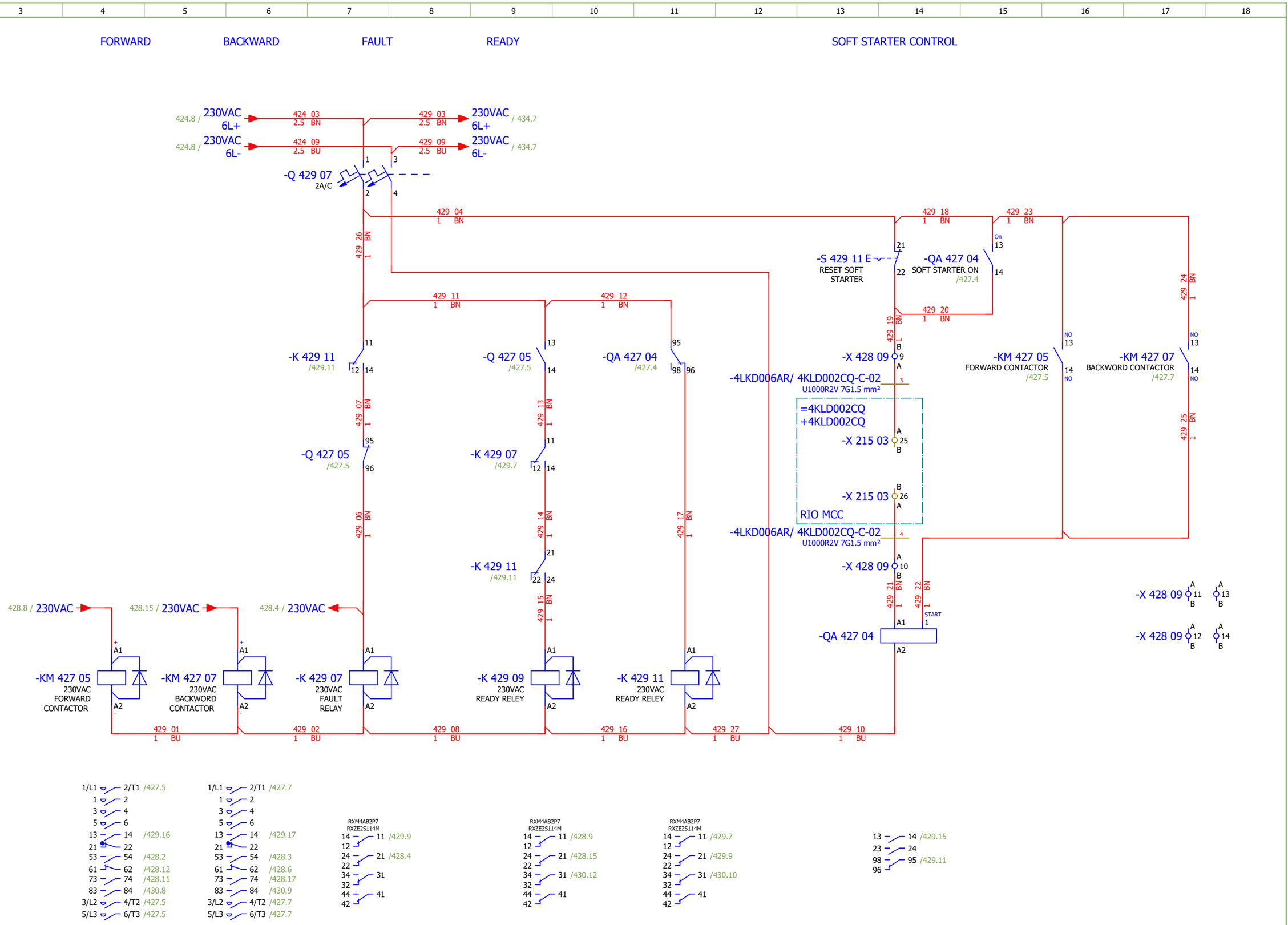

Date:	17.03.2026.	SINTAKSA A Voith Company	Client: ANDRITZ TEP d.o.o. Ulica 108. brigade ZNG 84, 35000 Slavonski Brod, Croatia	Scope: BOILER/LOW VOLTAGE CABINET BOILER (NORMAL) 6	Project: BRC-4	Unit & Issuer: ATEP0	Number: 1874	Revision: G	
Drawn:	Luka Božičević								#D
Approved:	Grga Kolić		Object: RDF Albioma Les Bois Rouge Reunion - France	Content: ASH CRUSHER BELOW ECO 2 - CONTROL	Drawing designation: BRC-4-ATEP0-1874-G			=4LKD001AR	Sheet: 429
Format:	A3							+4LKD006AR	Next: 430

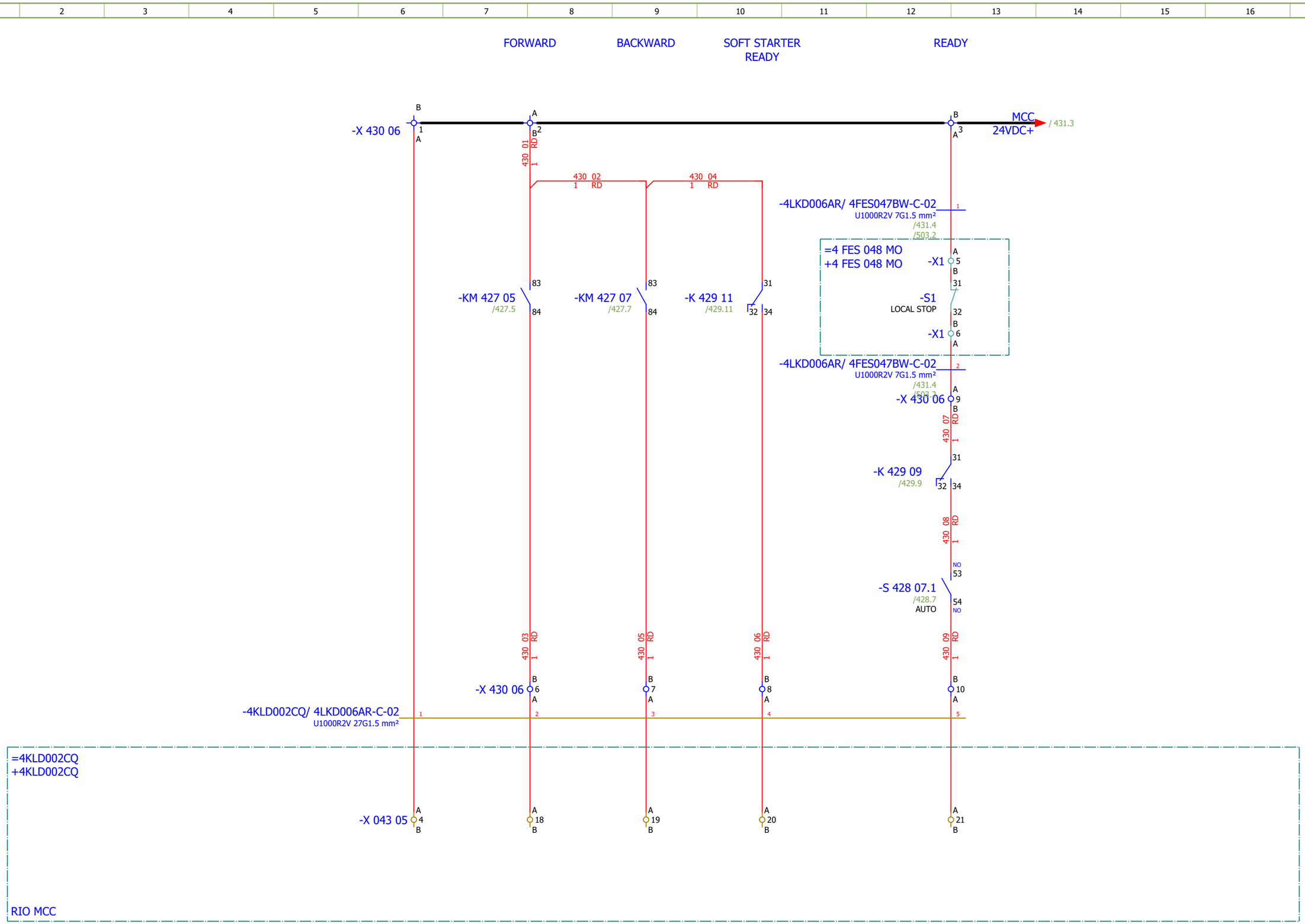

Date:	17.03.2026.	SINTAKSA A Voith Company	Client:	ANDRITZ TEP d.o.o. Ulica 108. brigade ZNG 84, 35000 Slavonski Brod, Croatia	Scope:	BOILER/LOW VOLTAGE CABINET BOILER (NORMAL) 6	Project: BRC-4	Unit & Issuer: ATEP0	Number: 1874	Revision: G
Drawn:	Luka Božičević									#D
Approved:	Grga Kolić		Object:	RDF Albioma Les Bois Rouge Reunion - France	Content:	ASH CRUSHER BELOW ECO 2 - SIGNALIZATION	Drawing designation: BRC-4-ATEP0-1874-G		=4LKD001AR	Sheet: 430
Format:	A3								+4LKD006AR	Next: 431

ASH CRUSHER BELOW ECO
2 - "0" PULSE

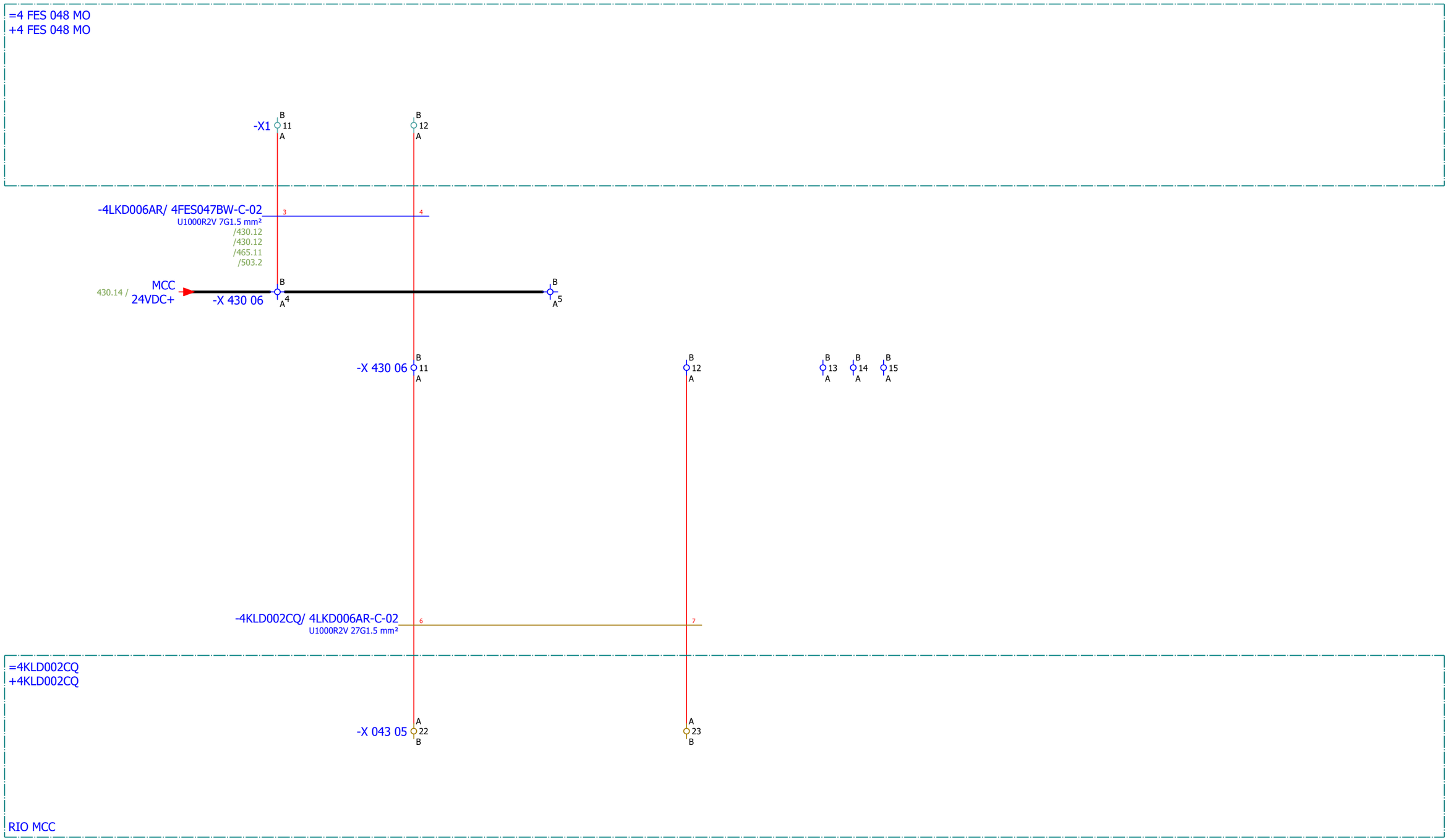

Date:	17.03.2026.	SINTAKSA A Voith Company	Client:	ANDRITZ TEP d.o.o. Ulica 108. brigade ZNG 84, 35000 Slavonski Brod, Croatia	Scope: BOILER/LOW VOLTAGE CABINET BOILER (NORMAL) 6	Project: BRC-4	Unit & Issuer: ATEP0	Number: 1874	Revision: G
Drawn:	Luka Božičević								#D
Approved:	Grga Kolić		Object:	RDF Albioma Les Bois Rouge Reunion - France	Content: ASH CRUSHER BELOW ECO 2 - SIGNALIZATION	Drawing designation: BRC-4-ATEP0-1874-G		=4LKD001AR	Sheet: 431
Format:	A3							+4LKD006AR	Next: 432

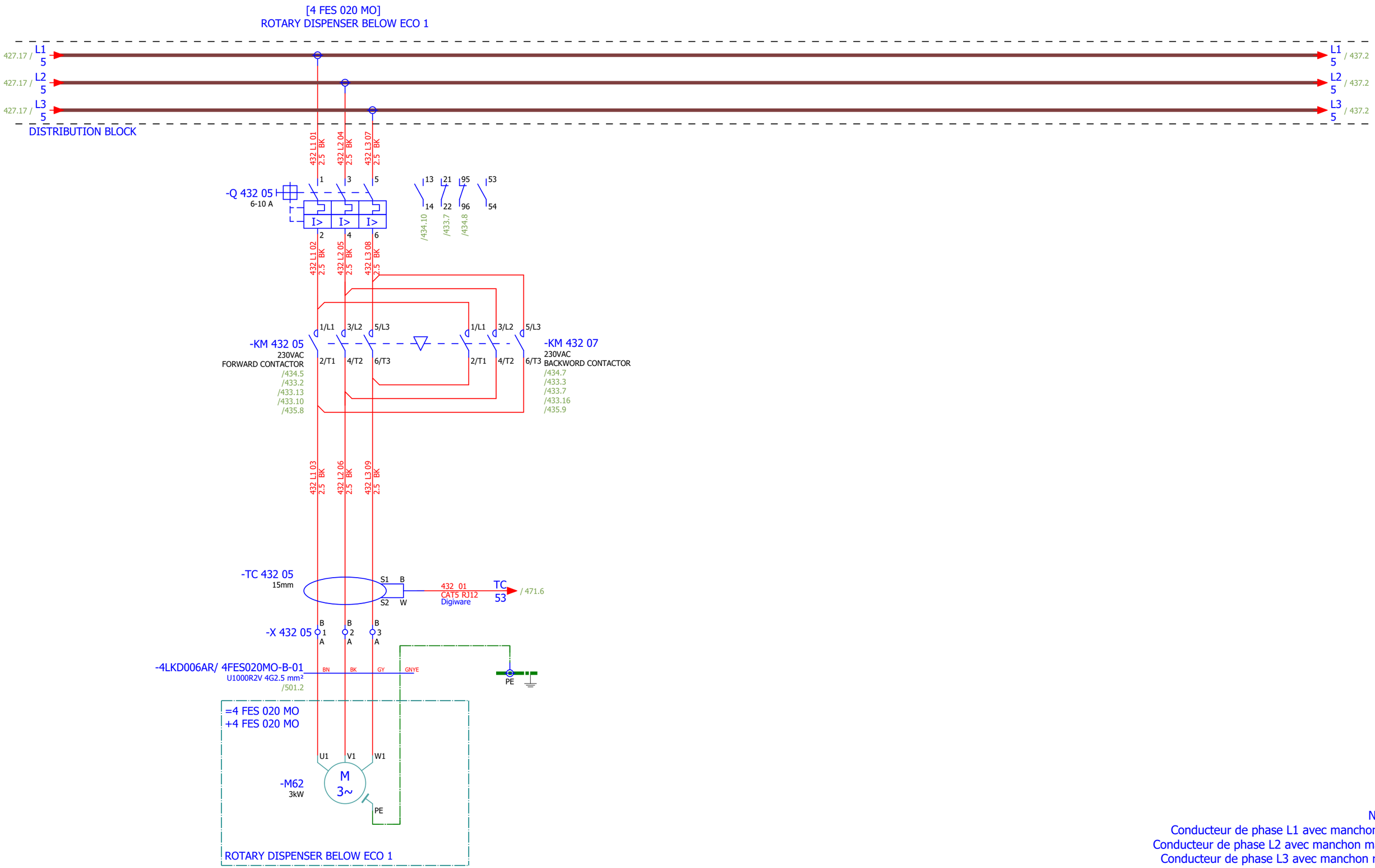

NOTE:
Conducteur de phase L1 avec manchon noir
Conducteur de phase L2 avec manchon marron
Conducteur de phase L3 avec manchon rouge

Date:	17.03.2026.	SINTAKSA A Voith Company	Client:	ANDRITZ TEP d.o.o. Ulica 108. brigade ZNG 84, 35000 Slavonski Brod, Croatia	Scope: BOILER/LOW VOLTAGE CABINET BOILER (NORMAL) 6	Project: BRC-4	Unit & Issuer: ATEP0	Number: 1874	Revision: G
Drawn:	Luka Božičević								#D
Approved:	Grga Kolić		Object:	RDF Albioma Les Bois Rouge Reunion - France	Content: ROTARY DISPENSER BELOW ECO 1	Drawing designation: BRC-4-ATEP0-1874-G		=4LKD001AR	Sheet: 432
Format:	A3							+4LKD006AR	Next: 433

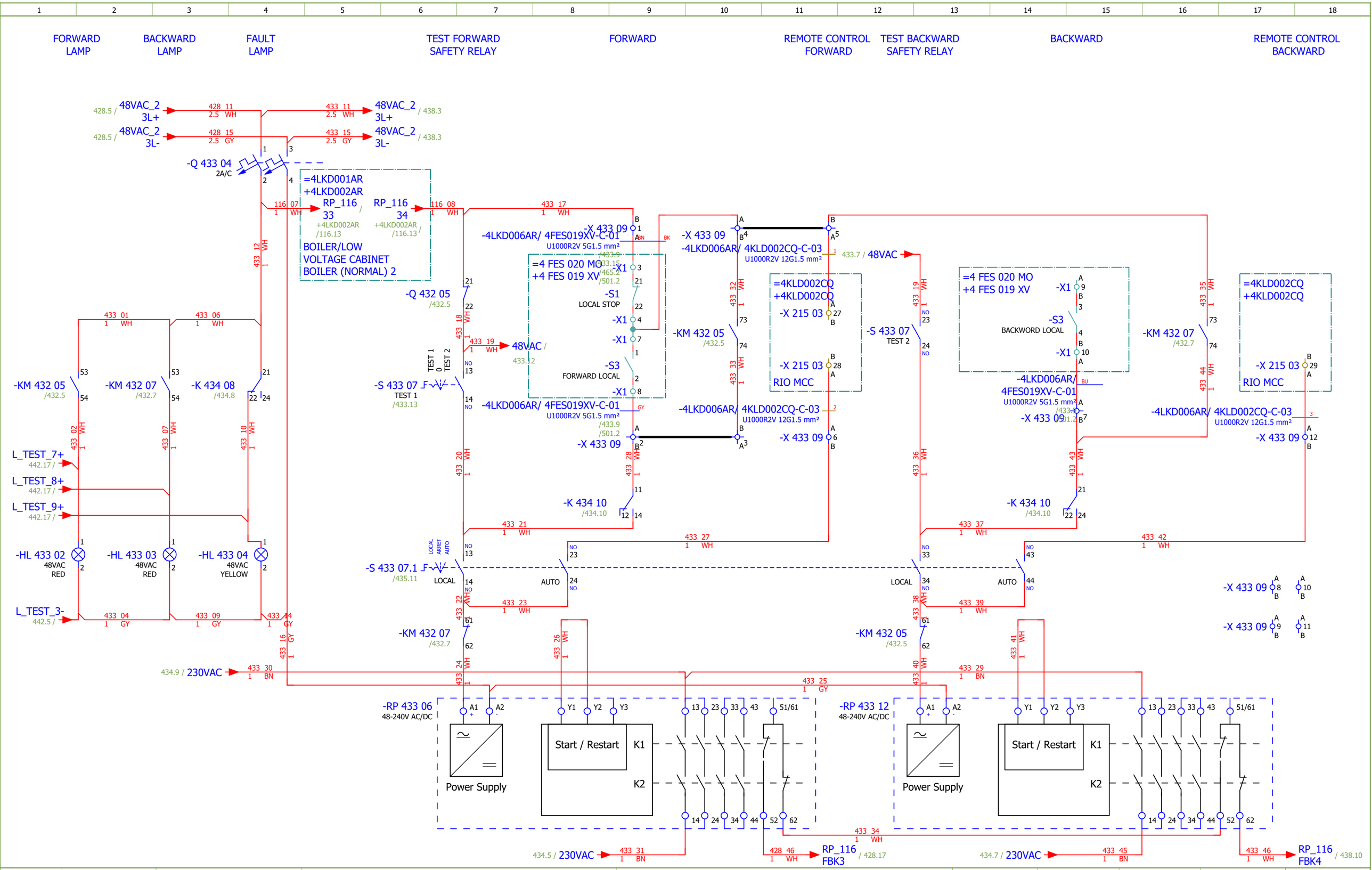

Date:	17.03.2026.	SINTAKSA A Voith Company	Client:	ANDRITZ TEP d.o.o. Ulica 108. brigade ZNG 84, 35000 Slavonski Brod, Croatia	Scope:	BOILER/LOW VOLTAGE CABINET BOILER (NORMAL) 6	Project: BRC-4	Unit & Issuer: ATEP0	Number: 1874	Revision: G	#D
Drawn:	Luka Božičević		Object:	RDF Albioma Les Bois Rouge Reunion - France	Content:	ROTARY DISPENSER BELOW ECO 1 - CONTROL	Drawing designation: BRC-4-ATEP0-1874-G			=4LKD001AR	Sheet: 433
Approved:	Grga Kolić									+4LKD006AR	Next: 434
Format:	A3										

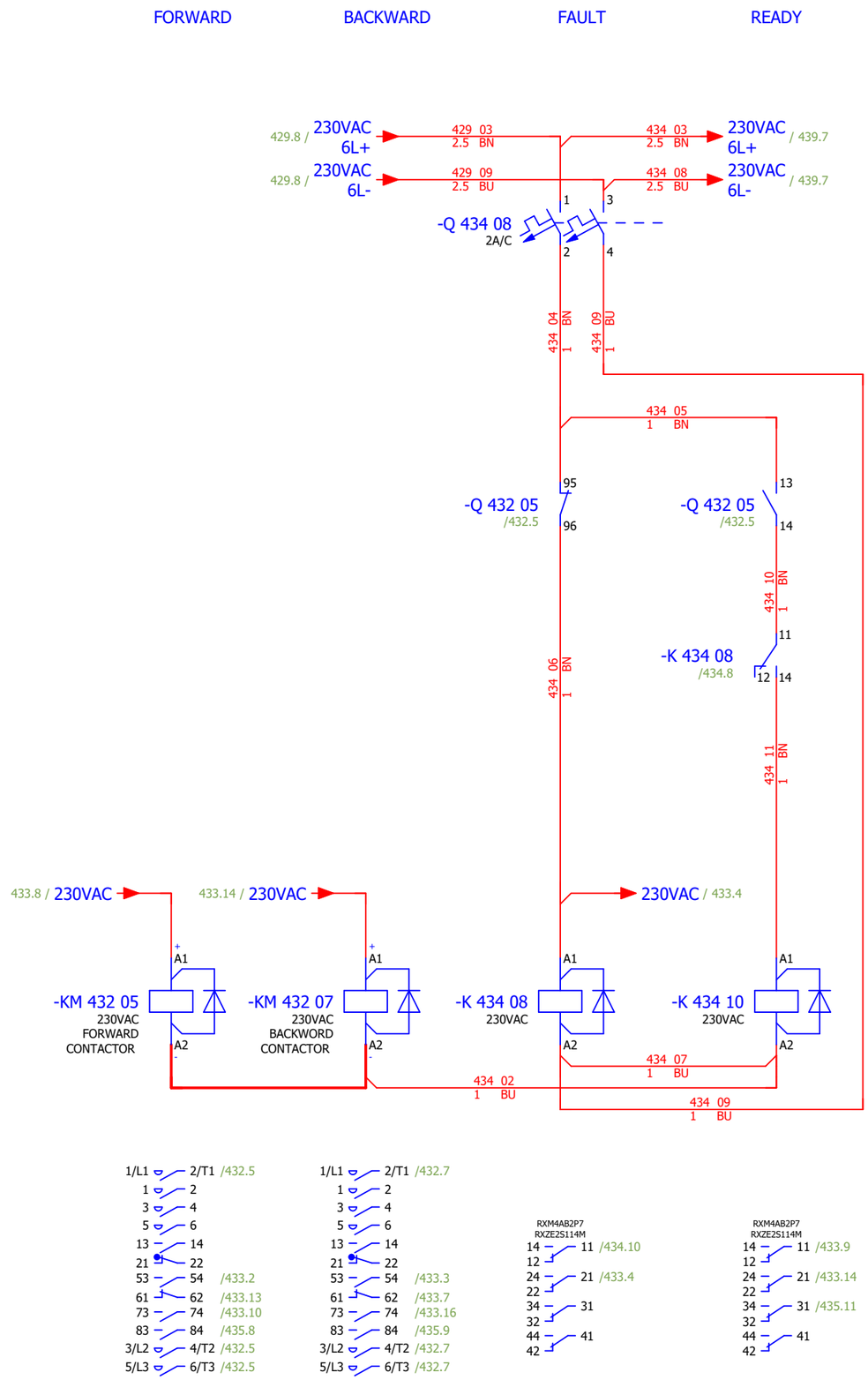

Date:	17.03.2026.	SINTAKSA A Voith Company	Client: ANDRITZ TEP d.o.o. Ulica 108. brigade ZNG 84, 35000 Slavonski Brod, Croatia	Scope: BOILER/LOW VOLTAGE CABINET BOILER (NORMAL) 6	Project: BRC-4	Unit & Issuer: ATEP0	Number: 1874	Revision: G
Drawn:	Luka Božičević							#D
Approved:	Grga Kolić		Object: RDF Albioma Les Bois Rouge Reunion - France	Content: ROTARY DISPENSER BELOW ECO 1 - CONTROL	Drawing designation: BRC-4-ATEP0-1874-G			=4LKD001AR
Format:	A3							+4LKD006AR

Sheet: 434
Next: 435

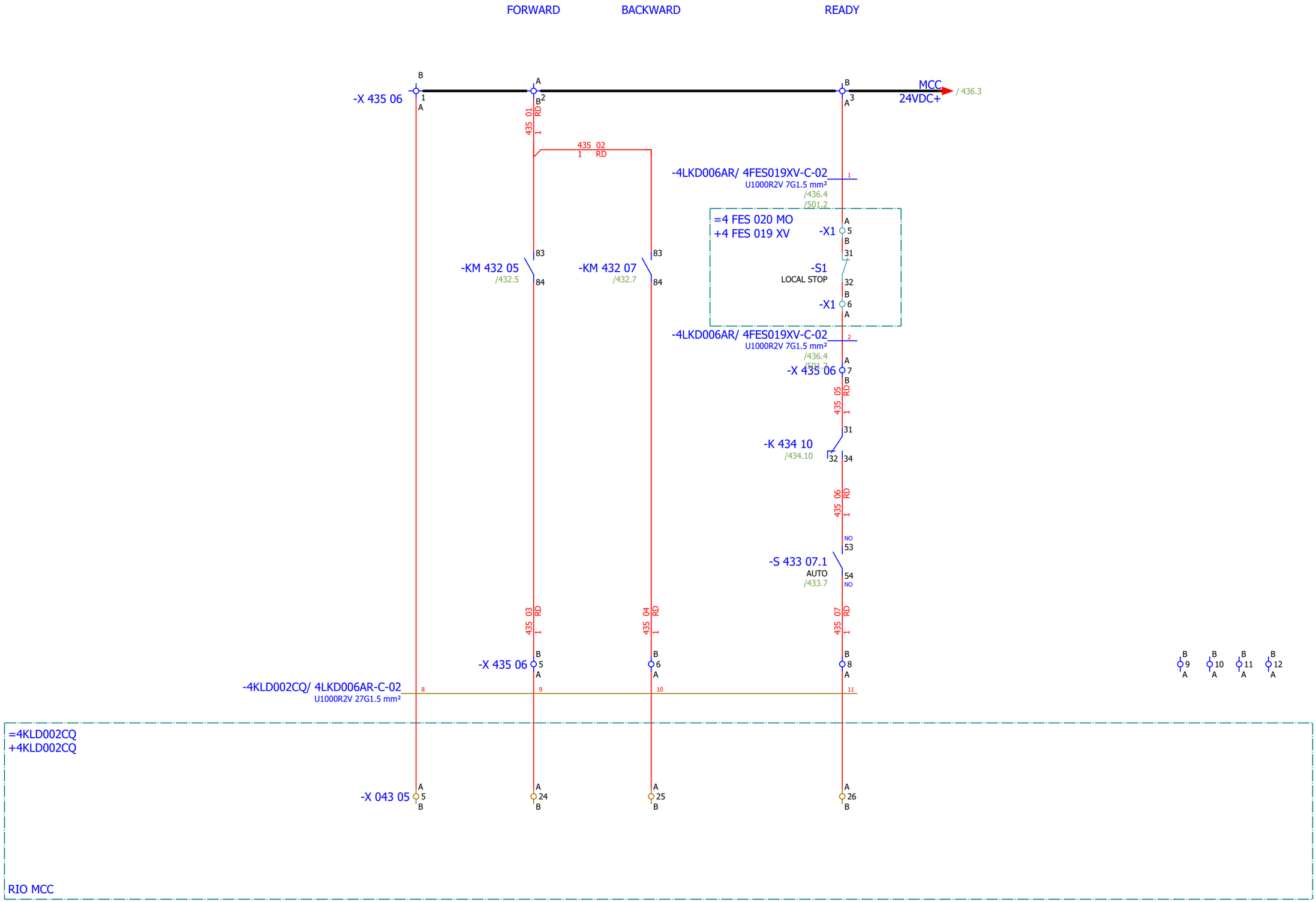

Date:	17.03.2026.	SINTAKSA A Voith Company	Client:	ANDRITZ TEP d.o.o. Ulica 108. brigade ZNG 84, 35000 Slavonski Brod, Croatia	Scope: BOILER/LOW VOLTAGE CABINET BOILER (NORMAL) 6	Project: BRC-4	Unit & Issuer: ATEP0	Number: 1874	Revision: G
Drawn:	Luka Božičević								#D
Approved:	Grga Kolić		Object:	RDF Albioma Les Bois Rouge Reunion - France	Content: ROTARY DISPENSER BELOW ECO 1 - SIGNALIZATION	Drawing designation: BRC-4-ATEP0-1874-G			=4LKD001AR
Format:	A3								+4LKD006AR

Sheet: 435
Next: 436

ROTARY DISPENSER BELOW
ECO 1 - "0" PULSE

=4 FES 020 MO
+4 FES 019 XV

-X1 B 11 A

B 12 A

-4LKD006AR/ 4FES019XV-C-02
U1000R2V 7G1.5 mm²
/435.11
/435.11
/465.4
/501.2

3 4

435.12 /
MCC
24VDC+
-X 435 06 B A 4

-X 435 06 B 13 A

B 14 A
B 15 A
B 16 A

-4KLD002CQ/ 4LKD006AR-C-02
U1000R2V 27G1.5 mm²

12

=4KLD002CQ
+4KLD002CQ

-X 043 05 A 27 B

RIO MCC

Date:	17.03.2026.	SINTAKSA A Voith Company	Client:	ANDRITZ TEP d.o.o. Ulica 108. brigade ZNG 84, 35000 Slavonski Brod, Croatia	Scope: BOILER/LOW VOLTAGE CABINET BOILER (NORMAL) 6	Project: BRC-4	Unit & Issuer: ATEP0	Number: 1874	Revision: G	
Drawn:	Luka Božičević									#D
Approved:	Grga Kolić		Object:	RDF Albioma Les Bois Rouge Reunion - France	Content: ROTARY DISPENSER BELOW ECO 1 - SIGNALIZATION	Drawing designation: BRC-4-ATEP0-1874-G			=4LKD001AR	Sheet: 436
Format:	A3								+4LKD006AR	Next: 437

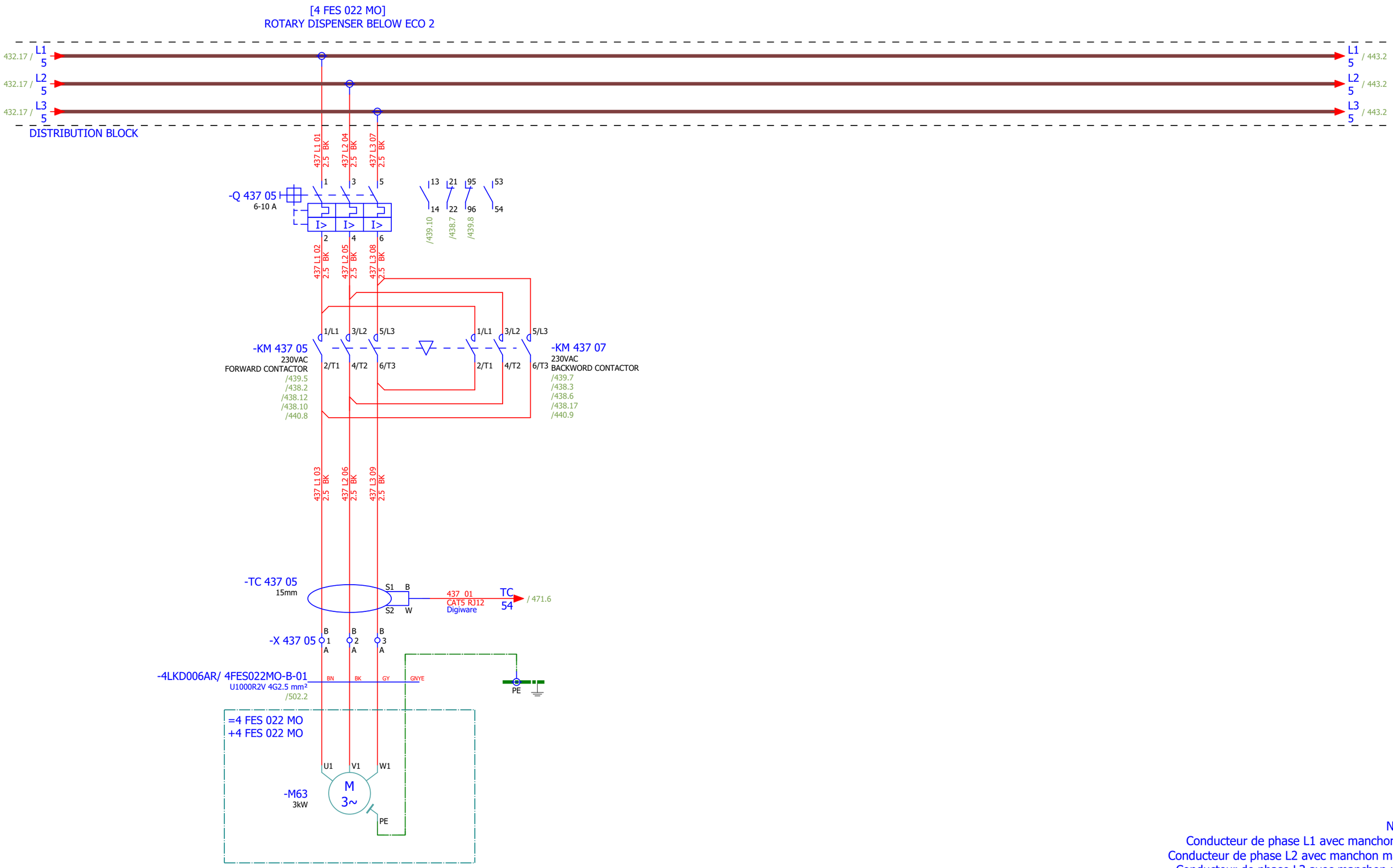

NOTE:
Conducteur de phase L1 avec manchon noir
Conducteur de phase L2 avec manchon marron
Conducteur de phase L3 avec manchon rouge

Date:	17.03.2026.	SINTAKSA A Voith Company	Client:	ANDRITZ TEP d.o.o. Ulica 108. brigade ZNG 84, 35000 Slavonski Brod, Croatia	Scope: BOILER/LOW VOLTAGE CABINET BOILER (NORMAL) 6	Project: BRC-4	Unit & Issuer: ATEP0	Number: 1874	Revision: G
Drawn:	Luka Božičević								#D
Approved:	Grga Kolić		Object:	RDF Albioma Les Bois Rouge Reunion - France	Content: ROTARY DISPENSER BELOW ECO 2	Drawing designation: BRC-4-ATEP0-1874-G		=4LKD001AR	Sheet: 437
Format:	A3							+4LKD006AR	Next: 438

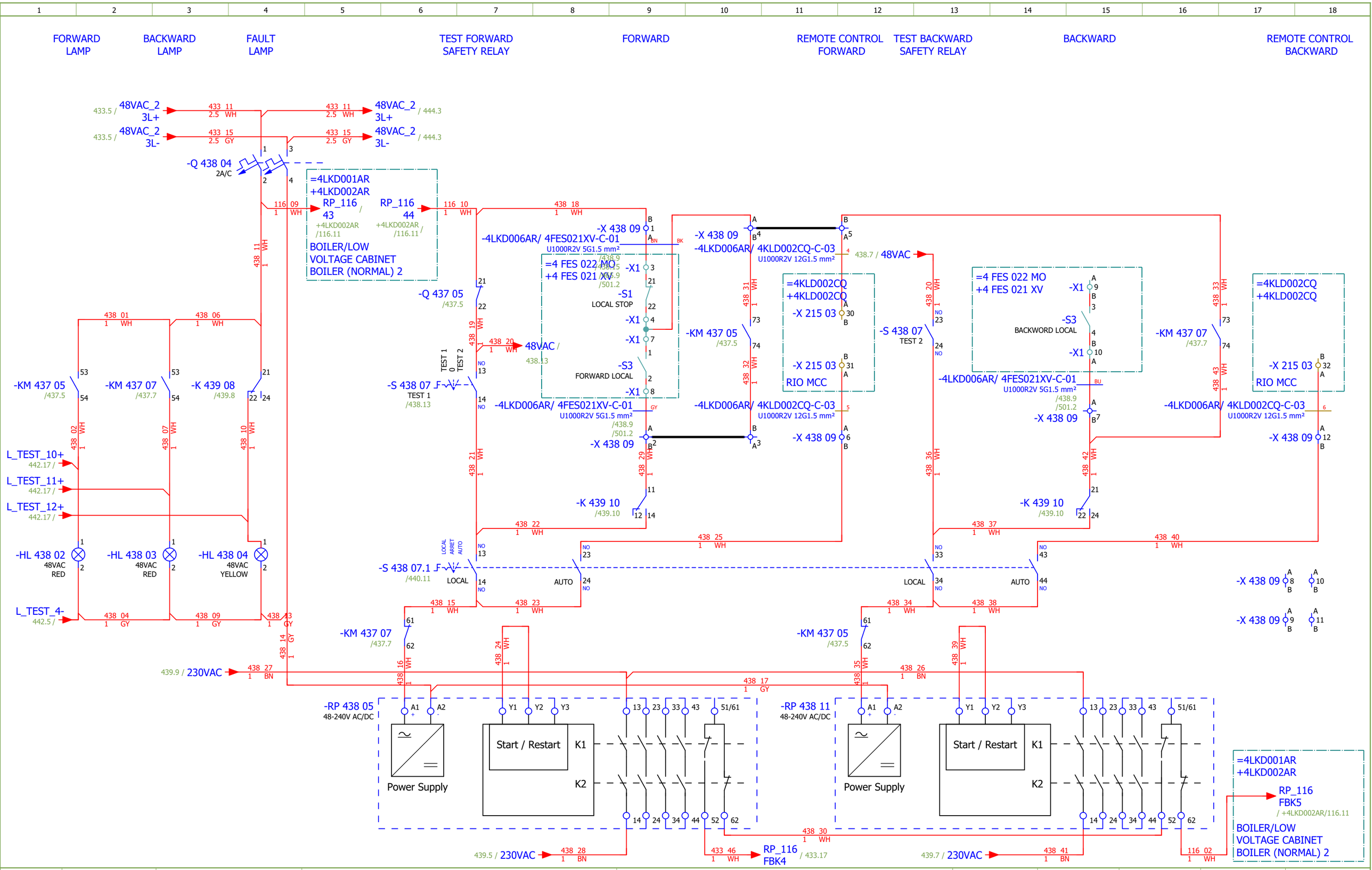

Date:	17.03.2026.	SINTAKSA A Voith Company	Client: ANDRITZ TEP d.o.o. Ulica 108. brigade ZNG 84, 35000 Slavonski Brod, Croatia	Scope: BOILER/LOW VOLTAGE CABINET BOILER (NORMAL) 6	Project: BRC-4	Unit & Issuer: ATEP0	Number: 1874	Revision: G	
Drawn:	Luka Božičević								#D
Approved:	Grga Kolić		Object: RDF Albioma Les Bois Rouge Reunion - France	Content: ROTARY DISPENSER BELOW ECO 2 - CONTROL	Drawing designation: BRC-4-ATEP0-1874-G			=4LKD001AR	Sheet: 438
Format:	A3							+4LKD006AR	Next: 439

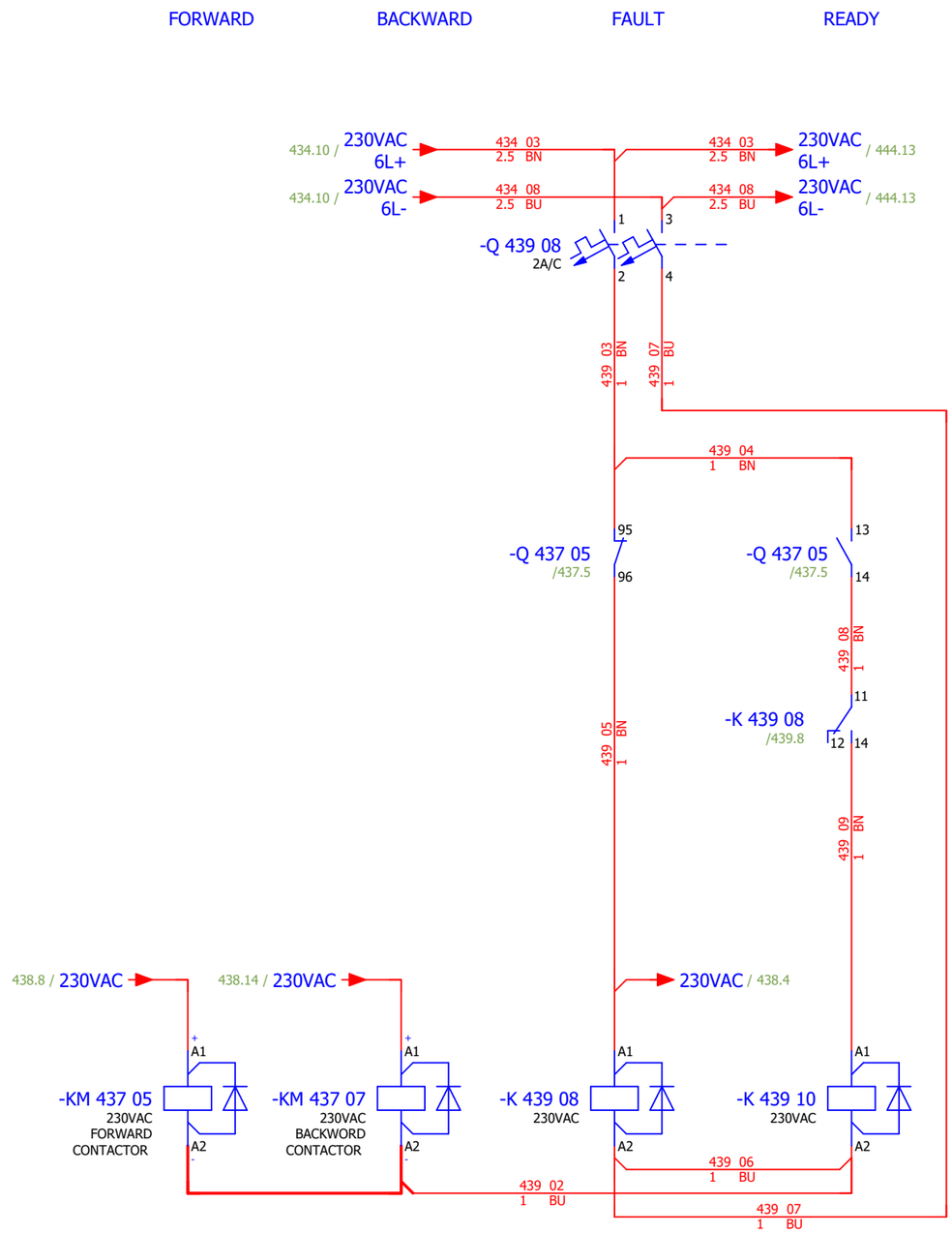

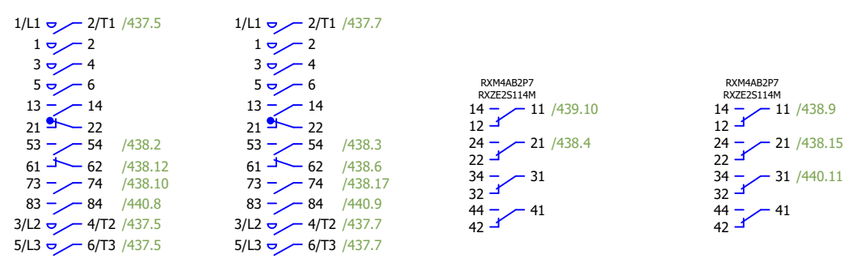

Date:	17.03.2026.	SINTAKSA A Voith Company	Client: ANDRITZ TEP d.o.o. Ulica 108. brigade ZNG 84, 35000 Slavonski Brod, Croatia	Scope: BOILER/LOW VOLTAGE CABINET BOILER (NORMAL) 6	Project: BRC-4	Unit & Issuer: ATEP0	Number: 1874	Revision: G	
Drawn:	Luka Božičević								#D
Approved:	Grga Kolić		Object: RDF Albioma Les Bois Rouge Reunion - France	Content: ROTARY DISPENSER BELOW ECO 2 - CONTROL	Drawing designation: BRC-4-ATEP0-1874-G			=4LKD001AR	Sheet: 439
Format:	A3							+4LKD006AR	Next: 440

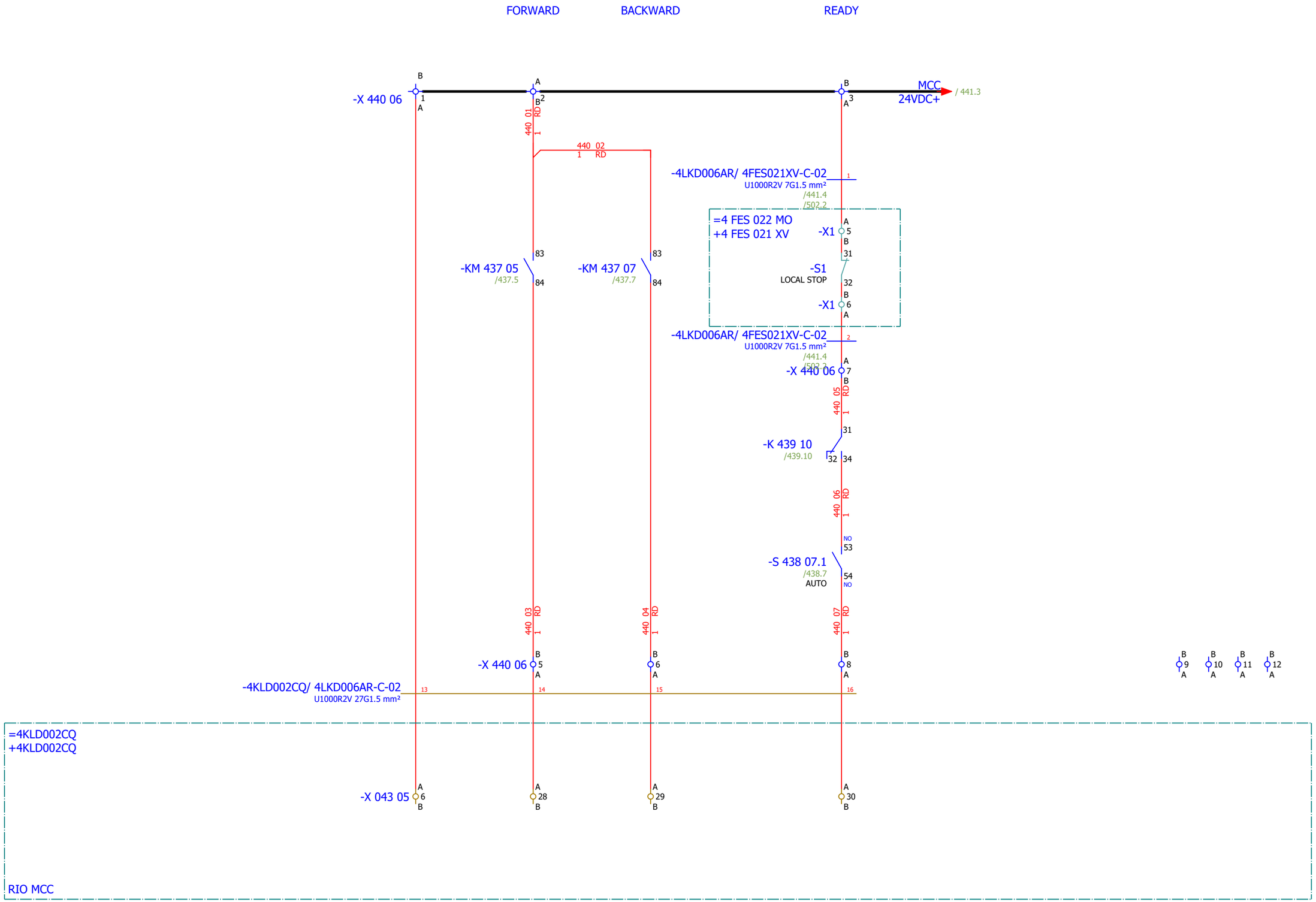

Date:	17.03.2026.	SINTAKSA A Voith Company	Client:	ANDRITZ TEP d.o.o. Ulica 108. brigade ZNG 84, 35000 Slavonski Brod, Croatia	Scope: BOILER/LOW VOLTAGE CABINET BOILER (NORMAL) 6	Project: BRC-4	Unit & Issuer: ATEP0	Number: 1874	Revision: G
Drawn:	Luka Božičević								#D
Approved:	Grga Kolić		Object:	RDF Albioma Les Bois Rouge Reunion - France	Content: ROTARY DISPENSER BELOW ECO 2 - SIGNALIZATION	Drawing designation: BRC-4-ATEP0-1874-G			=4LKD001AR
Format:	A3								+4LKD006AR

Sheet: 440
Next: 441

ROTARY DISPENSER BELOW
ECO 2 - "0" PULSE

=4 FES 022 MO
+4 FES 021 XV

-X1 B 11 A

B 12 A

-4LKD006AR/ 4FES021XV-C-02
U1000R2V 7G1.5 mm²
/440.11
/440.11
/465.11
/502.2

3 4

440.12 /
MCC
24VDC+
-X 440 06 B 4 A

-X 440 06 B 13 A

B 14 A B 15 A B 16 A

-4KLD002CQ/ 4LKD006AR-C-02
U1000R2V 27G1.5 mm²

17

=4KLD002CQ
+4KLD002CQ

-X 043 05 A 31 B

RIO MCC

Date:	17.03.2026.	SINTAKSA A Voith Company	Client:	ANDRITZ TEP d.o.o. Ulica 108. brigade ZNG 84, 35000 Slavonski Brod, Croatia	Scope: BOILER/LOW VOLTAGE CABINET BOILER (NORMAL) 6	Project: BRC-4	Unit & Issuer: ATEP0	Number: 1874	Revision: G	
Drawn:	Luka Božičević									#D
Approved:	Grga Kolić		Object:	RDF Albioma Les Bois Rouge Reunion - France	Content: ROTARY DISPENSER BELOW ECO 2 - SIGNALIZATION	Drawing designation: BRC-4-ATEP0-1874-G			=4LKD001AR	Sheet: 441
Format:	A3								+4LKD006AR	Next: 442

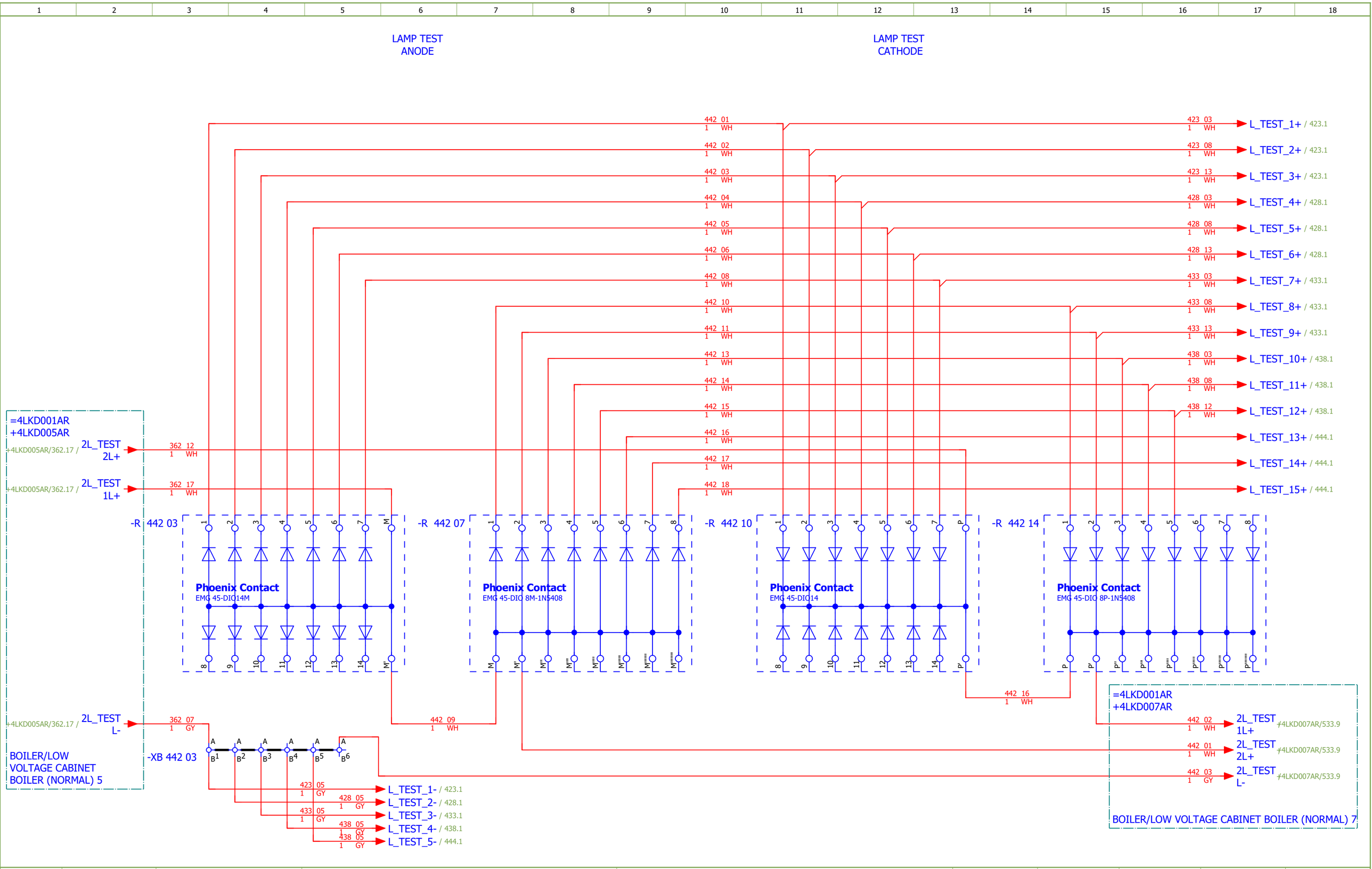

Date:	17.03.2026.	SINTAKSA A Voith Company	Client: ANDRITZ TEP d.o.o. Ulica 108. brigade ZNG 84, 35000 Slavonski Brod, Croatia	Scope: BOILER/LOW VOLTAGE CABINET BOILER (NORMAL) 6	Project: BRC-4	Unit & Issuer: ATEP0	Number: 1874	Revision: G	
Drawn:	Luka Božičević								#D
Approved:	Grga Kolić		Object: RDF Albioma Les Bois Rouge Reunion - France	Content: LAMP TEST	Drawing designation: BRC-4-ATEP0-1874-G			=4LKD001AR	Sheet: 442
Format:	A3							+4LKD006AR	Next: 443

[4SAR908MO]
FURNACE REFRACTORY COOLING FANS 2

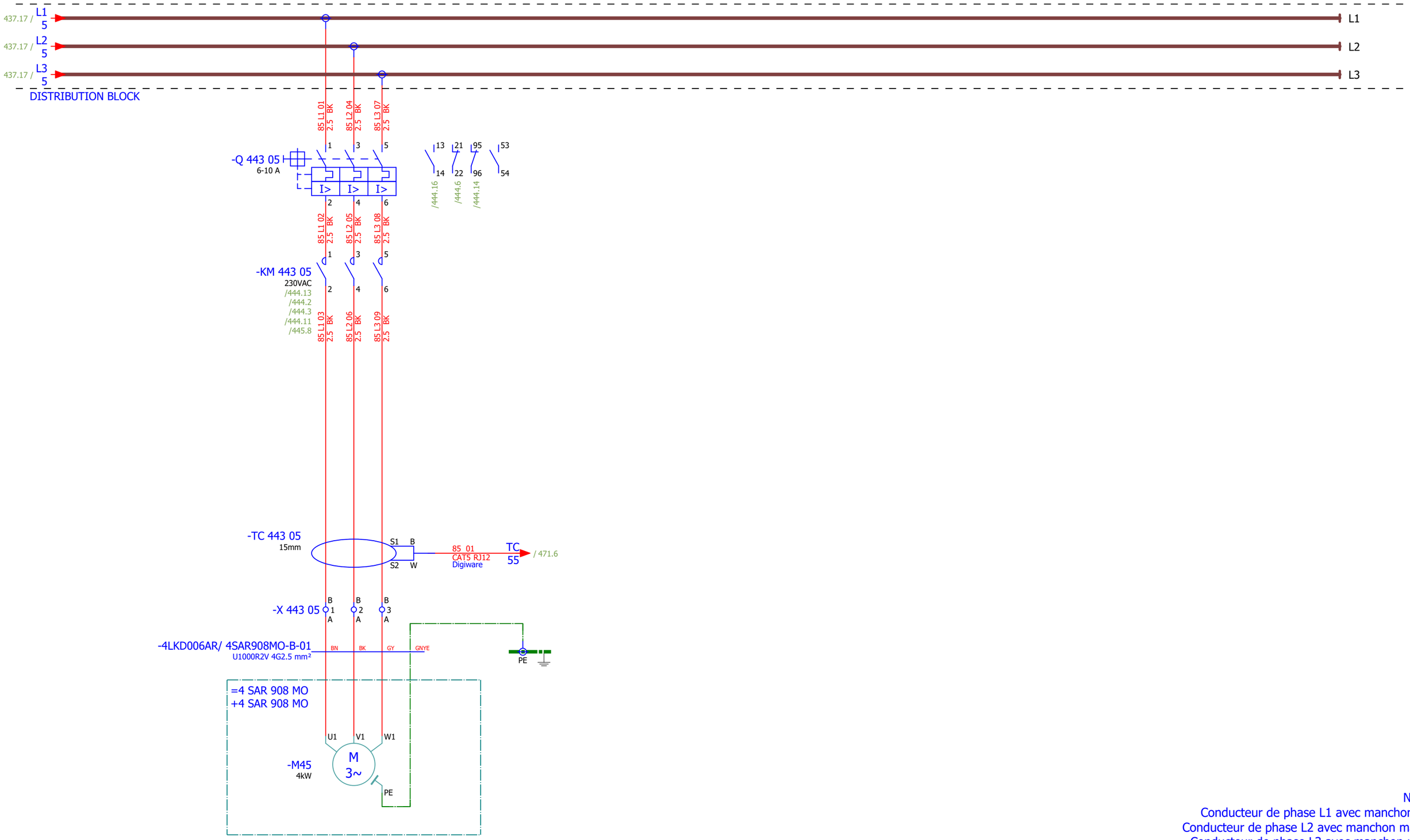

NOTE:
Conducteur de phase L1 avec manchon noir
Conducteur de phase L2 avec manchon marron
Conducteur de phase L3 avec manchon rouge

Date:	17.03.2026.	SINTAKSA A Voith Company	Client:	ANDRITZ TEP d.o.o. Ulica 108. brigade ZNG 84, 35000 Slavonski Brod, Croatia	Scope: BOILER/LOW VOLTAGE CABINET BOILER (NORMAL) 6	Project: BRC-4	Unit & Issuer: ATEP0	Number: 1870	Revision: F
Drawn:	Luka Božičević								#D
Approved:	Grga Kolić		Object:	RDF Albioma Les Bois Rouge Reunion - France	Content: FURNACE REFRACTORY COOLING FANS 2	Drawing designation: BRC-4-ATEP0-1870-F		=4LKD001AR	Sheet: 443
Format:	A3							+4LKD006AR	Next: 444

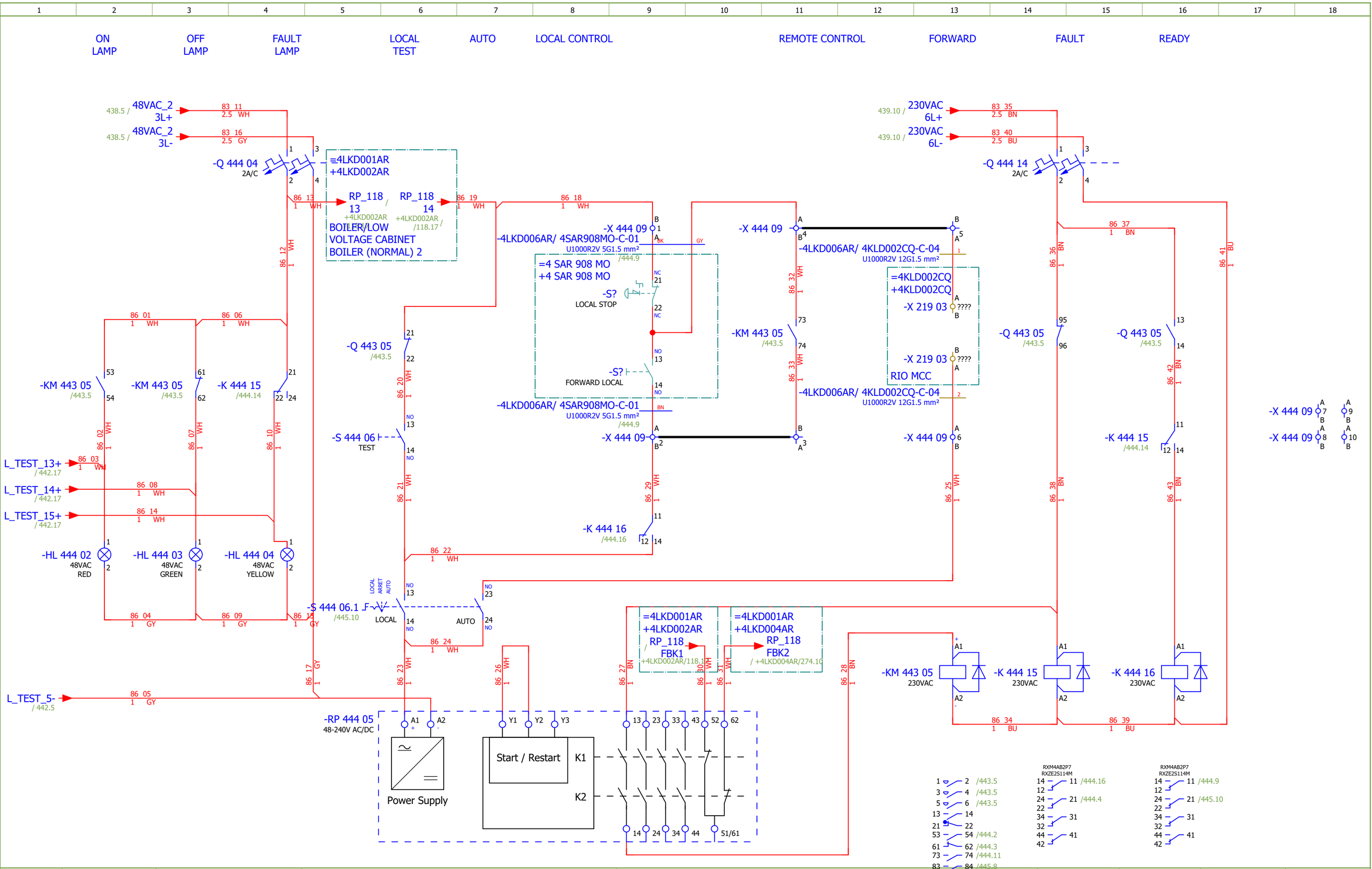

Date:	17.03.2026.	SINTAKSA A Voith Company	Client:	ANDRITZ TEP d.o.o. Ulica 108. brigade ZNG 84, 35000 Slavonski Brod, Croatia	Scope:	BOILER/LOW VOLTAGE CABINET BOILER (NORMAL) 6	Project: BRC-4	Unit & Issuer: ATEP0	Number: 1870	Revision: F
Drawn:	Luka Božičević									#D
Approved:	Grga Kolić		Object:	RDF Albioma Les Bois Rouge Reunion - France	Content:	FURNACE REFRACTORY COOLING FANS 2 - CONTROL	Drawing designation: BRC-4-ATEP0-1870-F		=4LKD001AR	Sheet: 444
Format:	A3								+4LKD006AR	Next: 445

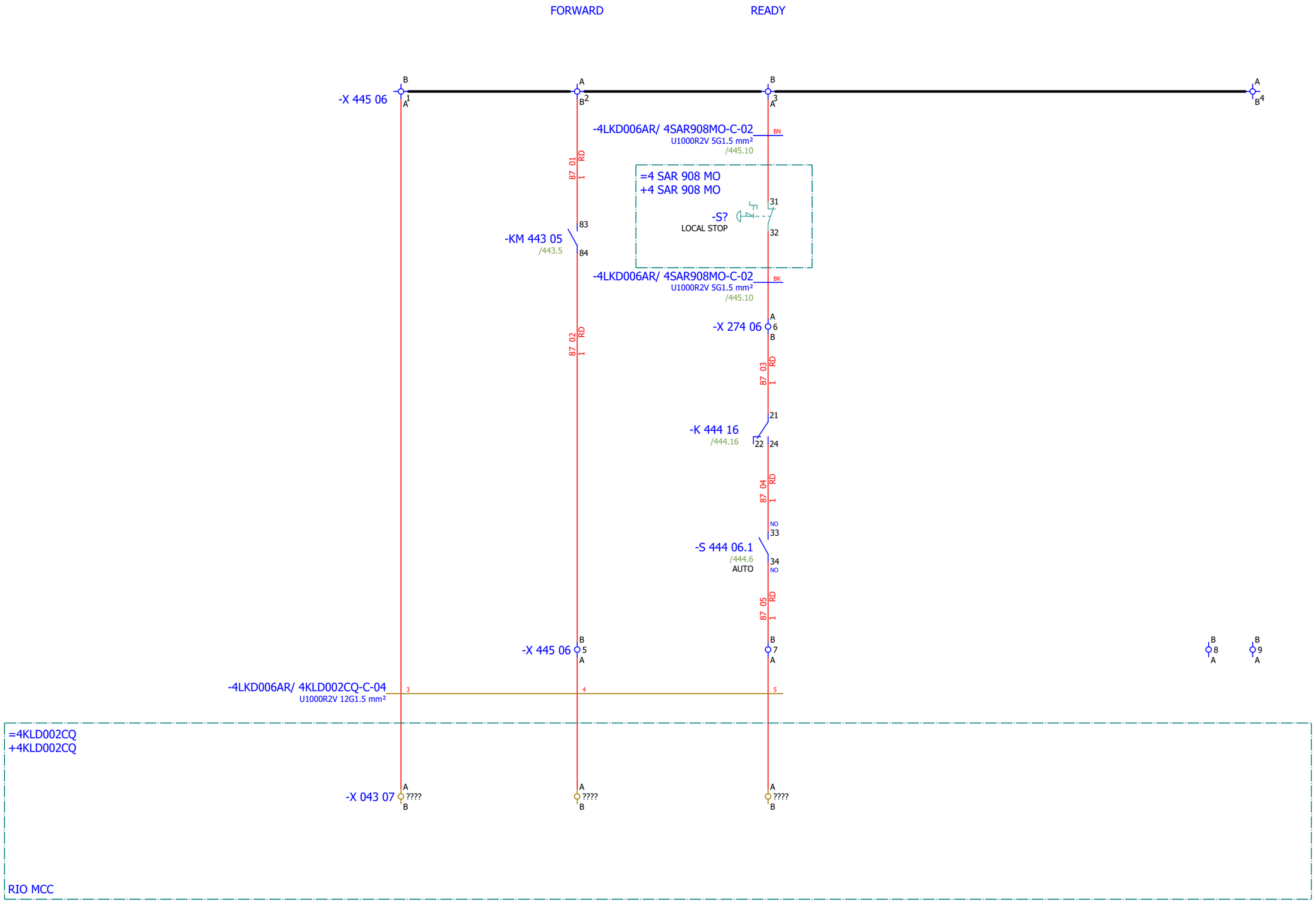

Date:	17.03.2026.	SINTAKSA A Voith Company	Client:	ANDRITZ TEP d.o.o. Ulica 108. brigade ZNG 84, 35000 Slavonski Brod, Croatia	Scope: BOILER/LOW VOLTAGE CABINET BOILER (NORMAL) 6	Project: BRC-4	Unit & Issuer: ATEP0	Number: 1870	Revision: F
Drawn:	Luka Božičević								#D
Approved:	Grga Kolić		Object:	RDF Albioma Les Bois Rouge Reunion - France	Content: FURNACE REFRACTORY COOLING FANS 2 - SIGNALIZATION	Drawing designation: BRC-4-ATEP0-1870-F		=4LKD001AR	Sheet: 445
Format:	A3							+4LKD006AR	Next: 461

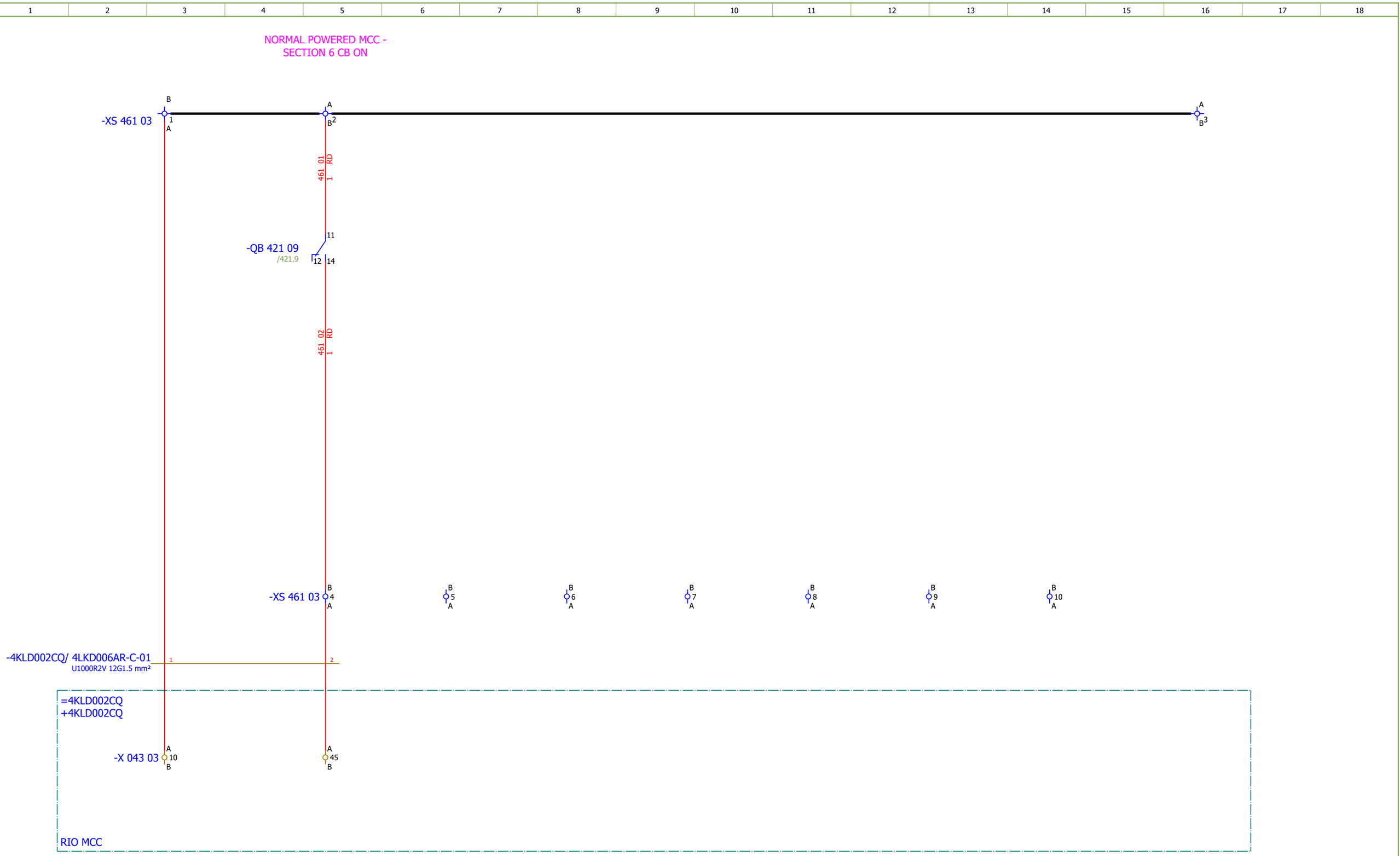

Date:	17.03.2026.	SINTAKSA A Voith Company	Client:	ANDRITZ TEP d.o.o. Ulica 108. brigade ZNG 84, 35000 Slavonski Brod, Croatia	Scope: BOILER/LOW VOLTAGE CABINET BOILER (NORMAL) 6	Project: BRC-4	Unit & Issuer: ATEP0	Number: 1874	Revision: G
Drawn:	Luka Božičević								#QA
Approved:	Grga Kolić		Object:	RDF Albioma Les Bois Rouge Reunion - France	Content: SIGNALIZATION	Drawing designation: BRC-4-ATEP0-1874-G			=4LKD001AR
Format:	A3								+4LKD006AR

Sheet: 461
Next: 465

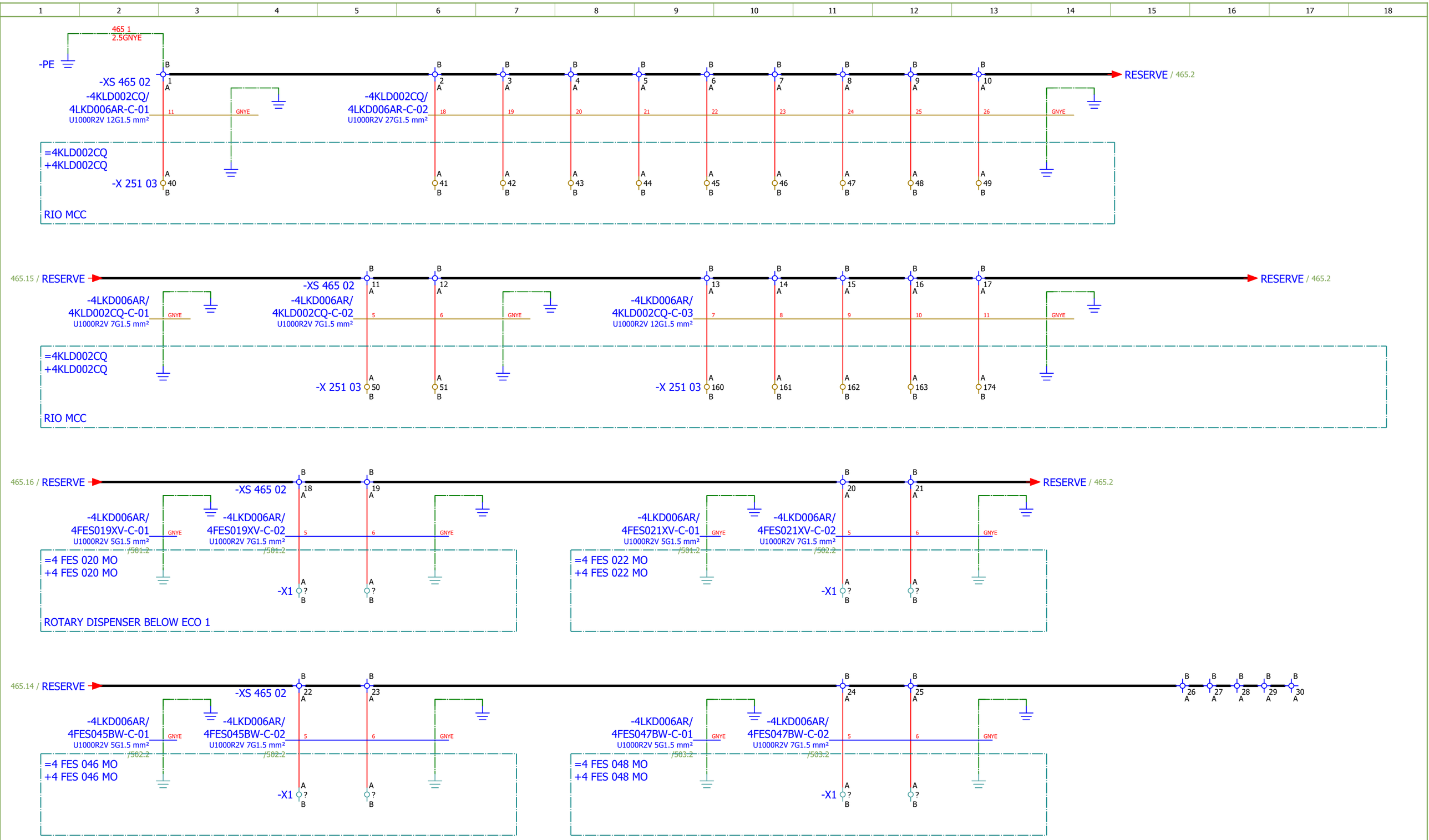

Date:	17.03.2026.	SINTAKSA A Voith Company	Client:	ANDRITZ TEP d.o.o. Ulica 108. brigade ZNG 84, 35000 Slavonski Brod, Croatia	Scope: BOILER/LOW VOLTAGE CABINET BOILER (NORMAL) 6	Project: BRC-4	Unit & Issuer: ATEP0	Number: 1874	Revision: G
Drawn:	Luka Božičević								#QB
Approved:	Grga Kolić		Object:	RDF Albioma Les Bois Rouge Reunion - France	Content: SPARE	Drawing designation: BRC-4-ATEP0-1874-G		=4LKD001AR	Sheet: 465
Format:	A3							+4LKD006AR	Next: 471

MEASUREMENT

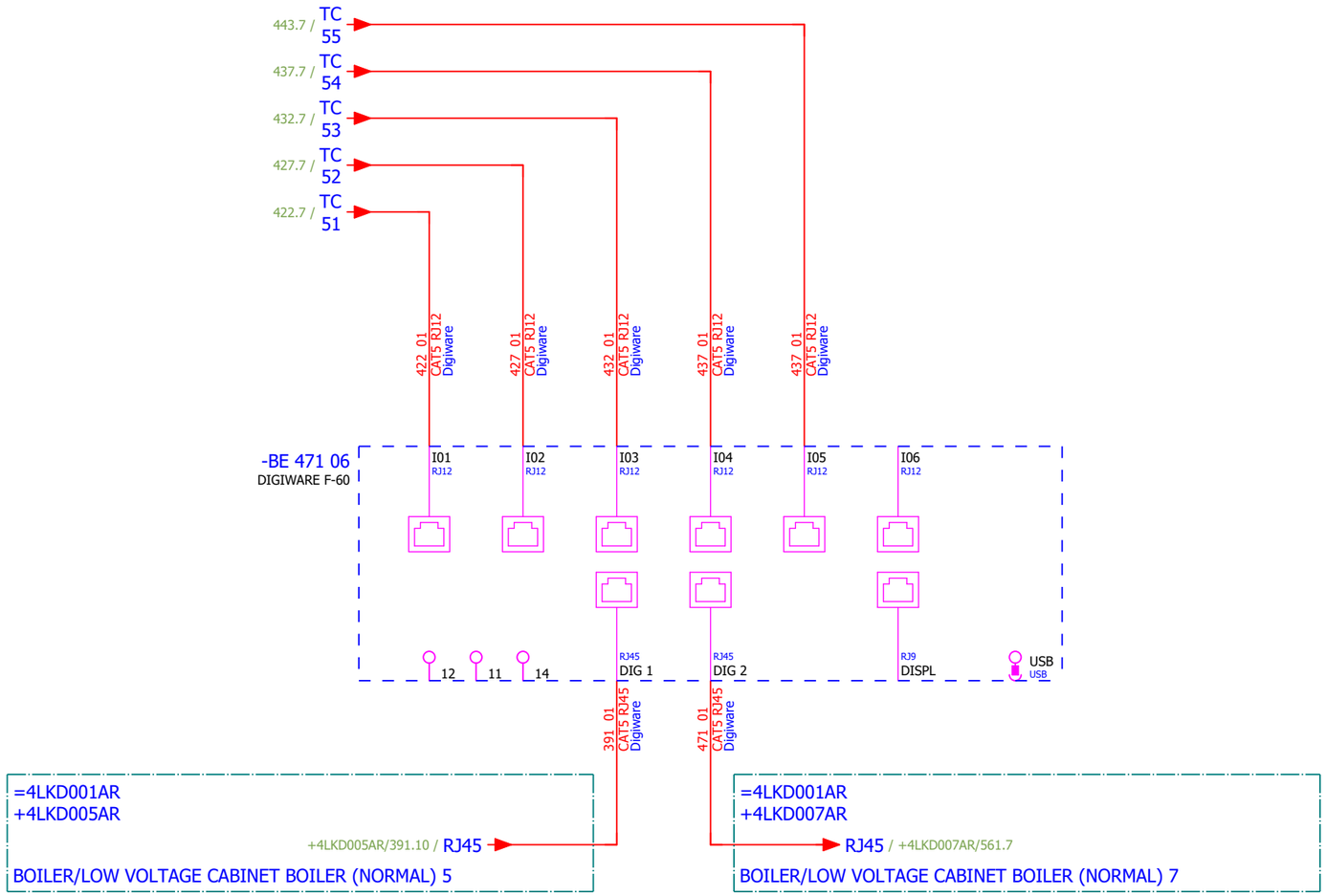

Date:	17.03.2026.	SINTAKSA A Voith Company	Client:	ANDRITZ TEP d.o.o. Ulica 108. brigade ZNG 84, 35000 Slavonski Brod, Croatia	Scope: BOILER/LOW VOLTAGE CABINET BOILER (NORMAL) 6	Project: BRC-4	Unit & Issuer: ATEP0	Number: 1874	Revision: G
Drawn:	Luka Božičević								#V
Approved:	Grga Kolić		Object:	RDF Albioma Les Bois Rouge Reunion - France	Content: COMMUNICATION	Drawing designation: BRC-4-ATEP0-1874-G			=4LKD001AR
Format:	A3								+4LKD006AR

Sheet: 471
Next: 501

1	2	3	4	5	6	7	8	9	10	11	12	13	14	15	16	17	18

Cable name: **4LKD006AR/ 4FES019XV-C-01**

Cable type: **U1000R2V** | No. of conn., diameter, length: **5G1.5 mm² /**

Remark:

Function text	Page / Column	FROM	Terminal	Conductor	TO	Terminal	Page / Column	Function text
FORWARD	=4LKD001AR+4LKD006AR/433.9	=4LKD001AR+4LKD006AR-X 433 09	1:A	**BN**	=4 FES 020 MO+4 FES 019 XV-X1	3	=4LKD001AR+4LKD006AR/433.9	FORWARD
=	=4LKD001AR+4LKD006AR/433.9			**BK**	=4LKD001AR+4LKD006AR-X 433 09	4:A	=4LKD001AR+4LKD006AR/433.10	=
=	=4LKD001AR+4LKD006AR/433.9	=4LKD001AR+4LKD006AR-X 433 09	2:A	**GY**	=4 FES 020 MO+4 FES 019 XV-X1	8	=4LKD001AR+4LKD006AR/433.9	=
BACKWARD	=4LKD001AR+4LKD006AR/433.15	=4LKD001AR+4LKD006AR-X 433 09	7:A	**BU**	=4 FES 020 MO+4 FES 019 XV-X1	10:A	=4LKD001AR+4LKD006AR/433.15	BACKWARD
	=4LKD001AR+4LKD006AR/465.3	=4LKD001AR+4LKD006AR-PE		**GNYE**	=4 FES 020 MO+4 FES 020 MO-PE		=4LKD001AR+4LKD006AR/465.3	

Cable name: **4LKD006AR/ 4FES019XV-C-02**

Cable type: **U1000R2V** | No. of conn., diameter, length: **7G1.5 mm² /**

Remark:

Function text	Page / Column	FROM	Terminal	Conductor	TO	Terminal	Page / Column	Function text
READY	=4LKD001AR+4LKD006AR/435.11	=4LKD001AR+4LKD006AR-X 435 06	3:A	**1**	=4 FES 020 MO+4 FES 019 XV-X1	5:A	=4LKD001AR+4LKD006AR/435.11	READY
=	=4LKD001AR+4LKD006AR/435.11	=4LKD001AR+4LKD006AR-X 435 06	7:A	**2**	=4 FES 020 MO+4 FES 019 XV-X1	6:A	=4LKD001AR+4LKD006AR/435.11	=
	=4LKD001AR+4LKD006AR/436.4	=4LKD001AR+4LKD006AR-X 435 06	4:B	**3**	=4 FES 020 MO+4 FES 019 XV-X1	11:A	=4LKD001AR+4LKD006AR/436.4	
ROTARY DISPENSER BELOW ECO 1 - "0" PULSE	=4LKD001AR+4LKD006AR/436.6	=4LKD001AR+4LKD006AR-X 435 06	13:B	**4**	=4 FES 020 MO+4 FES 019 XV-X1	12:A	=4LKD001AR+4LKD006AR/436.6	ROTARY DISPENSER BELOW ECO 1 - "0" PULSE
	=4LKD001AR+4LKD006AR/465.4	=4LKD001AR+4LKD006AR-XS 465 02	18:A	**5**	=4 FES 020 MO+4 FES 020 MO-X1	?:A	=4LKD001AR+4LKD006AR/465.4	
	=4LKD001AR+4LKD006AR/465.5	=4LKD001AR+4LKD006AR-XS 465 02	19:A	**6**	=4 FES 020 MO+4 FES 020 MO-X1	?:A	=4LKD001AR+4LKD006AR/465.5	
	=4LKD001AR+4LKD006AR/465.7	=4LKD001AR+4LKD006AR-PE		**GNYE**	=4 FES 020 MO+4 FES 020 MO-PE		=4LKD001AR+4LKD006AR/465.6	

Cable name: **4LKD006AR/ 4FES020MO-B-01**

Cable type: **U1000R2V** | No. of conn., diameter, length: **4G2.5 mm² /**

Remark:

Function text	Page / Column	FROM	Terminal	Conductor	TO	Terminal	Page / Column	Function text
	=4LKD001AR+4LKD006AR/432.5	=4LKD001AR+4LKD006AR-X 432 05	1:A	**BN**	=4 FES 020 MO+4 FES 020 MO-M62	U1	=4LKD001AR+4LKD006AR/432.5	
[4 FES 020 MO] ROTARY DISPENSER BELOW ECO 1	=4LKD001AR+4LKD006AR/432.5	=4LKD001AR+4LKD006AR-X 432 05	2:A	**BK**	=4 FES 020 MO+4 FES 020 MO-M62	V1	=4LKD001AR+4LKD006AR/432.5	
=	=4LKD001AR+4LKD006AR/432.5	=4LKD001AR+4LKD006AR-X 432 05	3:A	**GY**	=4 FES 020 MO+4 FES 020 MO-M62	W1	=4LKD001AR+4LKD006AR/432.5	
	=4LKD001AR+4LKD006AR/432.7	=4LKD001AR+4LKD006AR-PE		**GNYE**	=4 FES 020 MO+4 FES 020 MO-M62	PE	=4LKD001AR+4LKD006AR/432.5	

Cable name: **4LKD006AR/ 4FES021XV-C-01**

Cable type: **U1000R2V** | No. of conn., diameter, length: **5G1.5 mm² /**

Remark:

Function text	Page / Column	FROM	Terminal	Conductor	TO	Terminal	Page / Column	Function text
FORWARD	=4LKD001AR+4LKD006AR/438.9	=4LKD001AR+4LKD006AR-X 438 09	1:A	**BN**	=4 FES 022 MO+4 FES 021 XV-X1	3	=4LKD001AR+4LKD006AR/438.9	FORWARD
=	=4LKD001AR+4LKD006AR/438.9			**BK**	=4LKD001AR+4LKD006AR-X 438 09	4:A	=4LKD001AR+4LKD006AR/438.10	=
=	=4LKD001AR+4LKD006AR/438.9	=4LKD001AR+4LKD006AR-X 438 09	2:A	**GY**	=4 FES 022 MO+4 FES 021 XV-X1	8	=4LKD001AR+4LKD006AR/438.9	=
BACKWARD	=4LKD001AR+4LKD006AR/438.15	=4LKD001AR+4LKD006AR-X 438 09	7:A	**BU**	=4 FES 022 MO+4 FES 021 XV-X1	10:A	=4LKD001AR+4LKD006AR/438.15	BACKWARD
	=4LKD001AR+4LKD006AR/465.10	=4LKD001AR+4LKD006AR-PE		**GNYE**	=4 FES 022 MO+4 FES 022 MO-PE		=4LKD001AR+4LKD006AR/465.9	

1	2	3	4	5	6	7	8	9	10	11	12	13	14	15	16	17	18

Cable name: **4LKD006AR/ 4FES021XV-C-02**

Cable type: **U1000R2V** No. of conn., diameter, length: **7G1.5 mm² /**

Remark:

Function text	Page / Column	FROM	Terminal	Conductor	TO	Terminal	Page / Column	Function text
READY	=4LKD001AR+4LKD006AR/440.11	=4LKD001AR+4LKD006AR-X 440 06	3:A	**1**	=4 FES 022 MO+4 FES 021 XV-X1	5:A	=4LKD001AR+4LKD006AR/440.11	READY
=	=4LKD001AR+4LKD006AR/440.11	=4LKD001AR+4LKD006AR-X 440 06	7:A	**2**	=4 FES 022 MO+4 FES 021 XV-X1	6:A	=4LKD001AR+4LKD006AR/440.11	=
	=4LKD001AR+4LKD006AR/441.4	=4LKD001AR+4LKD006AR-X 440 06	4:B	**3**	=4 FES 022 MO+4 FES 021 XV-X1	11:A	=4LKD001AR+4LKD006AR/441.4	
ROTARY DISPENSER BELOW ECO 2 - "0" PULSE	=4LKD001AR+4LKD006AR/441.6	=4LKD001AR+4LKD006AR-X 440 06	13:B	**4**	=4 FES 022 MO+4 FES 021 XV-X1	12:A	=4LKD001AR+4LKD006AR/441.6	ROTARY DISPENSER BELOW ECO 2 - "0" PULSE
	=4LKD001AR+4LKD006AR/465.11	=4LKD001AR+4LKD006AR-XS 465 02	20:A	**5**	=4 FES 022 MO+4 FES 022 MO-X1	?:A	=4LKD001AR+4LKD006AR/465.11	
	=4LKD001AR+4LKD006AR/465.12	=4LKD001AR+4LKD006AR-XS 465 02	21:A	**6**	=4 FES 022 MO+4 FES 022 MO-X1	?:A	=4LKD001AR+4LKD006AR/465.12	
	=4LKD001AR+4LKD006AR/465.13	=4LKD001AR+4LKD006AR-PE		**GNYE**	=4 FES 022 MO+4 FES 022 MO-PE		=4LKD001AR+4LKD006AR/465.13	

Cable name: **4LKD006AR/ 4FES022MO-B-01**

Cable type: **U1000R2V** No. of conn., diameter, length: **4G2.5 mm² /**

Remark:

Function text	Page / Column	FROM	Terminal	Conductor	TO	Terminal	Page / Column	Function text
	=4LKD001AR+4LKD006AR/437.5	=4LKD001AR+4LKD006AR-X 437 05	1:A	**BN**	=4 FES 022 MO+4 FES 022 MO-M63	U1	=4LKD001AR+4LKD006AR/437.5	
[4 FES 022 MO] ROTARY DISPENSER BELOW ECO 2	=4LKD001AR+4LKD006AR/437.5	=4LKD001AR+4LKD006AR-X 437 05	2:A	**BK**	=4 FES 022 MO+4 FES 022 MO-M63	V1	=4LKD001AR+4LKD006AR/437.5	
=	=4LKD001AR+4LKD006AR/437.5	=4LKD001AR+4LKD006AR-X 437 05	3:A	**GY**	=4 FES 022 MO+4 FES 022 MO-M63	W1	=4LKD001AR+4LKD006AR/437.5	
	=4LKD001AR+4LKD006AR/437.7	=4LKD001AR+4LKD006AR-PE		**GNYE**	=4 FES 022 MO+4 FES 022 MO-M63	PE	=4LKD001AR+4LKD006AR/437.5	

Cable name: **4LKD006AR/ 4FES045BW-C-01**

Cable type: **U1000R2V** No. of conn., diameter, length: **5G1.5 mm² /**

Remark:

Function text	Page / Column	FROM	Terminal	Conductor	TO	Terminal	Page / Column	Function text
FORWARD	=4LKD001AR+4LKD006AR/423.9	=4LKD001AR+4LKD006AR-X 423 09	1:A	**BN**	=4 FES 046 MO+4 FES 045 BW-X1	3	=4LKD001AR+4LKD006AR/423.9	FORWARD
=	=4LKD001AR+4LKD006AR/423.9			**BK**	=4LKD001AR+4LKD006AR-X 423 09	4:A	=4LKD001AR+4LKD006AR/423.10	=
=	=4LKD001AR+4LKD006AR/423.9	=4LKD001AR+4LKD006AR-X 423 09	2:A	**GY**	=4 FES 046 MO+4 FES 045 BW-X1	8	=4LKD001AR+4LKD006AR/423.9	=
BACKWARD	=4LKD001AR+4LKD006AR/423.15	=4LKD001AR+4LKD006AR-X 423 09	7:A	**BU**	=4 FES 046 MO+4 FES 045 BW-X1	10:A	=4LKD001AR+4LKD006AR/423.15	BACKWARD
	=4LKD001AR+4LKD006AR/465.3	=4LKD001AR+4LKD006AR-PE		**GNYE**	=4 FES 046 MO+4 FES 046 MO-PE		=4LKD001AR+4LKD006AR/465.3	

Cable name: **4LKD006AR/ 4FES045BW-C-02**

Cable type: **U1000R2V** No. of conn., diameter, length: **7G1.5 mm² /**

Remark:

Function text	Page / Column	FROM	Terminal	Conductor	TO	Terminal	Page / Column	Function text
READY	=4LKD001AR+4LKD006AR/425.13	=4LKD001AR+4LKD006AR-X 425 06	6:A	**1**	=4 FES 046 MO+4 FES 045 BW-X1	5:A	=4LKD001AR+4LKD006AR/425.13	READY
=	=4LKD001AR+4LKD006AR/425.13	=4LKD001AR+4LKD006AR-X 425 06	11:A	**2**	=4 FES 046 MO+4 FES 045 BW-X1	6:A	=4LKD001AR+4LKD006AR/425.13	=
	=4LKD001AR+4LKD006AR/426.4	=4LKD001AR+4LKD006AR-X 425 06	7:B	**3**	=4 FES 046 MO+4 FES 045 BW-X1	11:A	=4LKD001AR+4LKD006AR/426.4	
ASH CRUSHER BELOW ECO 1 - "0" PULSE	=4LKD001AR+4LKD006AR/426.6	=4LKD001AR+4LKD006AR-X 425 06	13:B	**4**	=4 FES 046 MO+4 FES 045 BW-X1	12:A	=4LKD001AR+4LKD006AR/426.6	ASH CRUSHER BELOW ECO 1 - "0" PULSE
	=4LKD001AR+4LKD006AR/465.4	=4LKD001AR+4LKD006AR-XS 465 02	22:A	**5**	=4 FES 046 MO+4 FES 046 MO-X1	?:A	=4LKD001AR+4LKD006AR/465.4	
	=4LKD001AR+4LKD006AR/465.5	=4LKD001AR+4LKD006AR-XS 465 02	23:A	**6**	=4 FES 046 MO+4 FES 046 MO-X1	?:A	=4LKD001AR+4LKD006AR/465.5	
	=4LKD001AR+4LKD006AR/465.7	=4LKD001AR+4LKD006AR-PE		**GNYE**	=4 FES 046 MO+4 FES 046 MO-PE		=4LKD001AR+4LKD006AR/465.6	

1	2	3	4	5	6	7	8	9	10	11	12	13	14	15	16	17	18

Cable name: **4LKD006AR/ 4FES046MO-B-01**

Cable type: **U1000R2V** | No. of conn., diameter, length: **4G2.5 mm² /**

Remark:

Function text	Page / Column	FROM	Terminal	Conductor	TO	Terminal	Page / Column	Function text
	=4LKD001AR+4LKD006AR/422.5	=4LKD001AR+4LKD006AR-X 422 05	1:A	**BN**	=4 FES 046 MO+4 FES 046 MO-M51	U1	=4LKD001AR+4LKD006AR/422.5	
[4 FES 046 MO] ASH CRUSHER BELOW ECO 1	=4LKD001AR+4LKD006AR/422.5	=4LKD001AR+4LKD006AR-X 422 05	2:A	**BK**	=4 FES 046 MO+4 FES 046 MO-M51	V1	=4LKD001AR+4LKD006AR/422.5	
=	=4LKD001AR+4LKD006AR/422.5	=4LKD001AR+4LKD006AR-X 422 05	3:A	**GY**	=4 FES 046 MO+4 FES 046 MO-M51	W1	=4LKD001AR+4LKD006AR/422.5	
	=4LKD001AR+4LKD006AR/422.7	=4LKD001AR+4LKD006AR-PE		**GNYE**	=4 FES 046 MO+4 FES 046 MO-M51	PE	=4LKD001AR+4LKD006AR/422.5	

Cable name: **4LKD006AR/ 4FES047BW-C-01**

Cable type: **U1000R2V** | No. of conn., diameter, length: **5G1.5 mm² /**

Remark:

Function text	Page / Column	FROM	Terminal	Conductor	TO	Terminal	Page / Column	Function text
FORWARD	=4LKD001AR+4LKD006AR/428.9	=4LKD001AR+4LKD006AR-X 428 09	1:A	**BN**	=4 FES 048 MO+4 FES 048 MO-X1	3	=4LKD001AR+4LKD006AR/428.9	FORWARD
=	=4LKD001AR+4LKD006AR/428.9			**BK**	=4LKD001AR+4LKD006AR-X 428 09	4:A	=4LKD001AR+4LKD006AR/428.11	=
=	=4LKD001AR+4LKD006AR/428.9	=4LKD001AR+4LKD006AR-X 428 09	2:A	**GY**	=4 FES 048 MO+4 FES 048 MO-X1	8	=4LKD001AR+4LKD006AR/428.9	=
BACKWARD	=4LKD001AR+4LKD006AR/428.15	=4LKD001AR+4LKD006AR-X 428 09	7:A	**BU**	=4 FES 048 MO+4 FES 048 MO-X1	10:A	=4LKD001AR+4LKD006AR/428.15	BACKWARD
	=4LKD001AR+4LKD006AR/465.10	=4LKD001AR+4LKD006AR-PE		**GNYE**	=4 FES 048 MO+4 FES 048 MO-PE		=4LKD001AR+4LKD006AR/465.9	

Cable name: **4LKD006AR/ 4FES047BW-C-02**

Cable type: **U1000R2V** | No. of conn., diameter, length: **7G1.5 mm² /**

Remark:

Function text	Page / Column	FROM	Terminal	Conductor	TO	Terminal	Page / Column	Function text
READY	=4LKD001AR+4LKD006AR/430.13	=4LKD001AR+4LKD006AR-X 430 06	3:A	**1**	=4 FES 048 MO+4 FES 048 MO-X1	5:A	=4LKD001AR+4LKD006AR/430.13	READY
=	=4LKD001AR+4LKD006AR/430.13	=4LKD001AR+4LKD006AR-X 430 06	9:A	**2**	=4 FES 048 MO+4 FES 048 MO-X1	6:A	=4LKD001AR+4LKD006AR/430.13	=
	=4LKD001AR+4LKD006AR/431.4	=4LKD001AR+4LKD006AR-X 430 06	4:B	**3**	=4 FES 048 MO+4 FES 048 MO-X1	11:A	=4LKD001AR+4LKD006AR/431.4	
ASH CRUSHER BELOW ECO 2 - "0" PULSE	=4LKD001AR+4LKD006AR/431.6	=4LKD001AR+4LKD006AR-X 430 06	11:B	**4**	=4 FES 048 MO+4 FES 048 MO-X1	12:A	=4LKD001AR+4LKD006AR/431.6	ASH CRUSHER BELOW ECO 2 - "0" PULSE
	=4LKD001AR+4LKD006AR/465.11	=4LKD001AR+4LKD006AR-XS 465 02	24:A	**5**	=4 FES 048 MO+4 FES 048 MO-X1	?:A	=4LKD001AR+4LKD006AR/465.11	
	=4LKD001AR+4LKD006AR/465.12	=4LKD001AR+4LKD006AR-XS 465 02	25:A	**6**	=4 FES 048 MO+4 FES 048 MO-X1	?:A	=4LKD001AR+4LKD006AR/465.12	
	=4LKD001AR+4LKD006AR/465.13	=4LKD001AR+4LKD006AR-PE		**GNYE**	=4 FES 048 MO+4 FES 048 MO-PE		=4LKD001AR+4LKD006AR/465.13	

Cable name: **4LKD006AR/ 4FES048MO-B-01**

Cable type: **U1000R2V** | No. of conn., diameter, length: **4G2.5 mm² /**

Remark:

Function text	Page / Column	FROM	Terminal	Conductor	TO	Terminal	Page / Column	Function text
	=4LKD001AR+4LKD006AR/427.5	=4LKD001AR+4LKD006AR-X 427 05	1:A	**BN**	=4 FES 048 MO+4 FES 048 MO-M52	U1	=4LKD001AR+4LKD006AR/427.5	
[4 FES 048 MO] ASH CRUSHER BELOW ECO 2	=4LKD001AR+4LKD006AR/427.5	=4LKD001AR+4LKD006AR-X 427 05	2:A	**BK**	=4 FES 048 MO+4 FES 048 MO-M52	V1	=4LKD001AR+4LKD006AR/427.5	
=	=4LKD001AR+4LKD006AR/427.5	=4LKD001AR+4LKD006AR-X 427 05	3:A	**GY**	=4 FES 048 MO+4 FES 048 MO-M52	W1	=4LKD001AR+4LKD006AR/427.5	
	=4LKD001AR+4LKD006AR/427.7	=4LKD001AR+4LKD006AR-PE		**GNYE**	=4 FES 048 MO+4 FES 048 MO-M52	PE	=4LKD001AR+4LKD006AR/427.5	

Terminal diagram

Strip

=4LKD001AR+4LKD006AR-X 422 05

A SIDE								B SIDE
Placement	Target designation	Cable name and type	Conductor	Jumper		Wiring	Target designation
/422.5	=4 FES 046 MO+4 FES 046 MO-M51:U1	4LKD006AR/ 4FES046MO-B-01 U1000R2V 4G2.5 mm²	BN 2.5 mm²	'	1	BK 2.5 mm²	-QA 422 04:2/T1
/422.5	=4 FES 046 MO+4 FES 046 MO-M51:V1	4LKD006AR/ 4FES046MO-B-01 U1000R2V 4G2.5 mm²	BK 2.5 mm²	'	2	BK 2.5 mm²	-QA 422 04:4/T2
/422.5	=4 FES 046 MO+4 FES 046 MO-M51:W1	4LKD006AR/ 4FES046MO-B-01 U1000R2V 4G2.5 mm²	GY 2.5 mm²	'	3	BK 2.5 mm²	-QA 422 04:6/T3

Date:	17.03.2026.	SINTAKSA A Voith Company	Client:	ANDRITZ TEP d.o.o. Ulica 108. brigade ZNG 84, 35000 Slavonski Brod, Croatia	Scope: BOILER/LOW VOLTAGE CABINET BOILER (NORMAL) 6	Project: BRC-4	Unit & Issuer: ATEP0	Number: 1874	Revision: G
Drawn:	Luka Božičević								#Y
Approved:	Grga Kolić		Object:	RDF Albioma Les Bois Rouge Reunion - France	Content: Terminal diagram =4LKD001AR+4LKD006AR-X 422 05	Drawing designation: BRC-4-ATEP0-1874-G			=4LKD001AR
Format:	A3								+4LKD006AR

Sheet: 601

Next: 602

Terminal diagram

Strip

=4LKD001AR+4LKD006AR-X 423 09

A SIDE						B SIDE
Placement	Target designation	Cable name and type	Conductor	Jumper	Wiring	Target designation
/423.9	=4 FES 046 MO+4 FES 046 MO-X1:3	4LKD006AR/ 4FES046MO-C-01 U1000R2V 5G1.5 mm²	BN 1.5 mm²		WH 1 mm²	-Q 422 05:21
/423.9	=4 FES 046 MO+4 FES 046 MO-X1:8	4LKD006AR/ 4FES046MO-C-01 U1000R2V 5G1.5 mm²	GY 1.5 mm²		WH 1 mm²	-K 424 09:11
					WH 1 mm²	-KM 422 05:74
/423.9		4LKD006AR/ 4FES046MO-C-01 U1000R2V 5G1.5 mm²	BK 1.5 mm²		WH 1 mm²	-KM 422 05:73
					WH 1 mm²	-KM 422 07:73
					WH 1 mm²	-S 423 07.1:23
/423.15	=4 FES 046 MO+4 FES 046 MO-X1:10:A	4LKD006AR/ 4FES046MO-C-01 U1000R2V 5G1.5 mm²	BU 1.5 mm²		WH 1 mm²	-K 424 09:21
					WH 1 mm²	-S 423 07.1:43
					BN 1 mm²	-S 424 11:22
					BN 1 mm²	-QA 422 04:A1

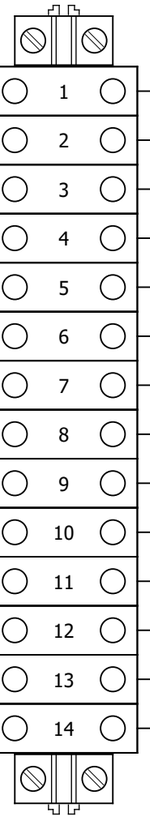

Date:	17.03.2026.	SINTAKSA A Voith Company	Client:	ANDRITZ TEP d.o.o. Ulica 108. brigade ZNG 84, 35000 Slavonski Brod, Croatia	Scope: BOILER/LOW VOLTAGE CABINET BOILER (NORMAL) 6	Project: BRC-4	Unit & Issuer: ATEP0	Number: 1874	Revision: G
Drawn:	Luka Božičević								#Y
Approved:	Grga Kolić		Object:	RDF Albioma Les Bois Rouge Reunion - France	Content: Terminal diagram =4LKD001AR+4LKD006AR-X 423 09	Drawing designation: BRC-4-ATEP0-1874-G			=4LKD001AR
Format:	A3								+4LKD006AR

Sheet: 602

Next: 603

Terminal diagram

Strip

=4LKD001AR+4LKD006AR-X 425 06

A SIDE						B SIDE
Placement	Target designation	Cable name and type	Conductor	Jumper	Wiring	Target designation
				1		
				2	RD 1 mm²	-KM 422 05:83
				3	RD 1 mm²	-KM 422 05:84
				4		
				5	RD 1 mm²	-KM 422 07:83
/425.13	=4 FES 046 MO+4 FES 046 MO-X1:5:A	4LKD006AR/ 4FES046MO-C-02 U1000R2V 7G1.5 mm²	1 1.5 mm²	6		
				7	3 1.5 mm²	=4 FES 046 MO+4 FES 046
				8		
				9	RD 1 mm²	-KM 422 07:84
				10	RD 1 mm²	-K 424 11:34
/425.13	=4 FES 046 MO+4 FES 046 MO-X1:6:A	4LKD006AR/ 4FES046MO-C-02 U1000R2V 7G1.5 mm²	2 1.5 mm²	11	RD 1 mm²	-K 424 09:31
				12	RD 1 mm²	-S 423 07.1:54
				13	4 1.5 mm²	=4 FES 046 MO+4 FES 046
				14		
				15		
				16		

Date:	17.03.2026.	SINTAKSA A Voith Company	Client:	ANDRITZ TEP d.o.o. Ulica 108. brigade ZNG 84, 35000 Slavonski Brod, Croatia	Scope: BOILER/LOW VOLTAGE CABINET BOILER (NORMAL) 6	Project: BRC-4	Unit & Issuer: ATEP0	Number: 1874	Revision: G
Drawn:	Luka Božičević								#Y
Approved:	Grga Kolić		Object:	RDF Albioma Les Bois Rouge Reunion - France	Content: Terminal diagram =4LKD001AR+4LKD006AR-X 425 06	Drawing designation: BRC-4-ATEP0-1874-G		=4LKD001AR	Sheet: 603
Format:	A3							+4LKD006AR	Next: 604

Terminal diagram

Strip

=4LKD001AR+4LKD006AR-X 427 05

A SIDE								B SIDE
Placement	Target designation	Cable name and type	Conductor	Jumper		Wiring	Target designation
/427.5	=4 FES 048 MO+4 FES 048 MO-M52:U1	4LKD006AR/ 4FES048MO-B-01 U1000R2V 4G2.5 mm²	BN 2.5 mm²	'	1	BK 2.5 mm²	-QA 427 04:2/T1
/427.5	=4 FES 048 MO+4 FES 048 MO-M52:V1	4LKD006AR/ 4FES048MO-B-01 U1000R2V 4G2.5 mm²	BK 2.5 mm²	'	2	BK 2.5 mm²	-QA 427 04:4/T2
/427.5	=4 FES 048 MO+4 FES 048 MO-M52:W1	4LKD006AR/ 4FES048MO-B-01 U1000R2V 4G2.5 mm²	GY 2.5 mm²	'	3	BK 2.5 mm²	-QA 427 04:6/T3

Terminal diagram

Strip

=4LKD001AR+4LKD006AR-X 428 09

A SIDE							B SIDE
Placement	Target designation	Cable name and type	Conductor	Jumper		Wiring	Target designation
/428.9	=4 FES 048 MO+4 FES 048 MO-X1:3	4LKD006AR/ 4FES048MO-C-01 U1000R2V 5G1.5 mm²	BN 1.5 mm²		1	WH 1 mm²	-Q 427 05:21
/428.9	=4 FES 048 MO+4 FES 048 MO-X1:8	4LKD006AR/ 4FES048MO-C-01 U1000R2V 5G1.5 mm²	GY 1.5 mm²		2	WH 1 mm²	-K 429 09:11
					3	WH 1 mm²	-KM 427 05:74
/428.9		4LKD006AR/ 4FES048MO-C-01 U1000R2V 5G1.5 mm²	BK 1.5 mm²		4	WH 1 mm²	-KM 427 05:73
					5	WH 1 mm²	-KM 427 07:73
					6	WH 1 mm²	-S 428 07.1:23
/428.15	=4 FES 048 MO+4 FES 048 MO-X1:10:A	4LKD006AR/ 4FES048MO-C-01 U1000R2V 5G1.5 mm²	BU 1.5 mm²		7	WH 1 mm²	-K 429 09:21
					8	WH 1 mm²	-S 428 07.1:43
					9	BN 1 mm²	-S 429 11:22
					10	BN 1 mm²	-QA 427 04:A1
					11		
					12		
					13		
					14		

Date:	17.03.2026.	SINTAKSA A Voith Company	Client: ANDRITZ TEP d.o.o. Ulica 108. brigade ZNG 84, 35000 Slavonski Brod, Croatia	Scope: BOILER/LOW VOLTAGE CABINET BOILER (NORMAL) 6	Project: BRC-4	Unit & Issuer: ATEP0	Number: 1874	Revision: G
Drawn:	Luka Božičević							#Y
Approved:	Grga Kolić		Object: RDF Albioma Les Bois Rouge Reunion - France	Content: Terminal diagram =4LKD001AR+4LKD006AR-X 428 09	Drawing designation: BRC-4-ATEP0-1874-G			=4LKD001AR
Format:	A3							+4LKD006AR

Sheet: 605

Next: 606

Terminal diagram

Strip

=4LKD001AR+4LKD006AR-X 430 06

A SIDE						B SIDE
Placement	Target designation	Cable name and type	Conductor	Jumper	Wiring	Target designation
				1		
				2	RD 1 mm²	-KM 427 05:83
/430.13	=4 FES 048 MO+4 FES 048 MO-X1:5:A	4LKD006AR/ 4FES048MO-C-02 U1000R2V 7G1.5 mm²	1 1.5 mm²	3		
				4	3 1.5 mm²	=4 FES 048 MO+4 FES 048
				5		
				6	RD 1 mm²	-KM 427 05:84
				7	RD 1 mm²	-KM 427 07:84
				8	RD 1 mm²	-K 429 11:34
/430.13	=4 FES 048 MO+4 FES 048 MO-X1:6:A	4LKD006AR/ 4FES048MO-C-02 U1000R2V 7G1.5 mm²	2 1.5 mm²	9	RD 1 mm²	-K 429 09:31
				10	RD 1 mm²	-S 428 07.1:54
				11	4 1.5 mm²	=4 FES 048 MO+4 FES 048
				12		
				13		
				14		
				15		

Date:	17.03.2026.	SINTAKSA A Voith Company	Client:	ANDRITZ TEP d.o.o. Ulica 108. brigade ZNG 84, 35000 Slavonski Brod, Croatia	Scope: BOILER/LOW VOLTAGE CABINET BOILER (NORMAL) 6	Project: BRC-4	Unit & Issuer: ATEP0	Number: 1874	Revision: G
Drawn:	Luka Božičević								#Y
Approved:	Grga Kolić		Object:	RDF Albioma Les Bois Rouge Reunion - France	Content: Terminal diagram =4LKD001AR+4LKD006AR-X 430 06	Drawing designation: BRC-4-ATEP0-1874-G		=4LKD001AR	Sheet: 606
Format:	A3							+4LKD006AR	Next: 607

Terminal diagram

Strip

=4LKD001AR+4LKD006AR-X 432 05

A SIDE								B SIDE
Placement	Target designation	Cable name and type	Conductor	Jumper		Wiring	Target designation
/432.5	=4 FES 020 MO+4 FES 020 MO-M62:U1	4LKD006AR/ 4FES020MO-B-01 U1000R2V 4G2.5 mm²	BN 2.5 mm²	'	1	BK 2.5 mm²	-KM 432 05:2/T1
/432.5	=4 FES 020 MO+4 FES 020 MO-M62:V1	4LKD006AR/ 4FES020MO-B-01 U1000R2V 4G2.5 mm²	BK 2.5 mm²	'	2	BK 2.5 mm²	-KM 432 05:4/T2
/432.5	=4 FES 020 MO+4 FES 020 MO-M62:W1	4LKD006AR/ 4FES020MO-B-01 U1000R2V 4G2.5 mm²	GY 2.5 mm²	'	3	BK 2.5 mm²	-KM 432 05:6/T3

Date:	17.03.2026.	SINTAKSA A Voith Company	Client:	ANDRITZ TEP d.o.o. Ulica 108. brigade ZNG 84, 35000 Slavonski Brod, Croatia	Scope: BOILER/LOW VOLTAGE CABINET BOILER (NORMAL) 6	Project: BRC-4	Unit & Issuer: ATEP0	Number: 1874	Revision: G
Drawn:	Luka Božičević								#Y
Approved:	Grga Kolić		Object:	RDF Albioma Les Bois Rouge Reunion - France	Content: Terminal diagram =4LKD001AR+4LKD006AR-X 432 05	Drawing designation: BRC-4-ATEP0-1874-G			=4LKD001AR
Format:	A3								+4LKD006AR

Sheet: 607

Next: 608

Terminal diagram

Strip

=4LKD001AR+4LKD006AR-X 433 09

A SIDE						B SIDE
Placement	Target designation	Cable name and type	Conductor	Jumper	Wiring	Target designation
/433.9	=4 FES 020 MO+4 FES 020 MO-X1:3	4LKD006AR/ 4FES020MO-C-01 U1000R2V 5G1.5 mm²	BN 1.5 mm²		WH 1 mm²	-Q 432 05:21
/433.9	=4 FES 020 MO+4 FES 020 MO-X1:8	4LKD006AR/ 4FES020MO-C-01 U1000R2V 5G1.5 mm²	GY 1.5 mm²		WH 1 mm²	-K 434 10:11
					WH 1 mm²	-KM 432 05:74
/433.9		4LKD006AR/ 4FES020MO-C-01 U1000R2V 5G1.5 mm²	BK 1.5 mm²		WH 1 mm²	-KM 432 05:73
					WH 1 mm²	-KM 432 07:73
					WH 1 mm²	-S 433 07.1:23
/433.15	=4 FES 020 MO+4 FES 020 MO-X1:10:A	4LKD006AR/ 4FES020MO-C-01 U1000R2V 5G1.5 mm²	BU 1.5 mm²		WH 1 mm²	-K 434 10:21
					WH 1 mm²	-S 433 07.1:43

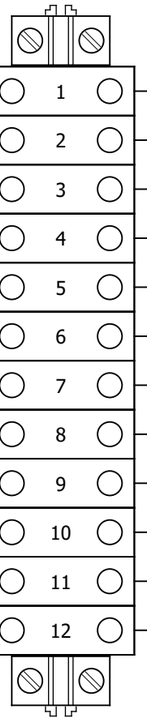

Date:	17.03.2026.	SINTAKSA A Voith Company	Client:	ANDRITZ TEP d.o.o. Ulica 108. brigade ZNG 84, 35000 Slavonski Brod, Croatia	Scope: BOILER/LOW VOLTAGE CABINET BOILER (NORMAL) 6	Project: BRC-4	Unit & Issuer: ATEP0	Number: 1874	Revision: G
Drawn:	Luka Božičević								#Y
Approved:	Grga Kolić		Object:	RDF Albioma Les Bois Rouge Reunion - France	Content: Terminal diagram =4LKD001AR+4LKD006AR-X 433 09	Drawing designation: BRC-4-ATEP0-1874-G			=4LKD001AR
Format:	A3								+4LKD006AR

Sheet: 608

Next: 609

Terminal diagram

Strip

=4LKD001AR+4LKD006AR-X 435 06

A SIDE						B SIDE
Placement	Target designation	Cable name and type	Conductor	Jumper	Wiring	Target designation
				1		
				2	RD 1 mm²	-KM 432 05:83
/435.11	=4 FES 020 MO+4 FES 020 MO-X1:5:A	4LKD006AR/ 4FES020MO-C-02 U1000R2V 7G1.5 mm²	1 1.5 mm²	3		
				4	3 1.5 mm²	=4 FES 020 MO+4 FES 020
				5	RD 1 mm²	-KM 432 05:84
				6	RD 1 mm²	-KM 432 07:84
/435.11	=4 FES 020 MO+4 FES 020 MO-X1:6:A	4LKD006AR/ 4FES020MO-C-02 U1000R2V 7G1.5 mm²	2 1.5 mm²	7	RD 1 mm²	-K 434 10:31
				8	RD 1 mm²	-S 433 07.1:54
				9		
				10		
				11		
				12		
				13	4 1.5 mm²	=4 FES 020 MO+4 FES 020
				14		
				15		
				16		

Date:	17.03.2026.	SINTAKSA A Voith Company	Client: ANDRITZ TEP d.o.o. Ulica 108. brigade ZNG 84, 35000 Slavonski Brod, Croatia	Scope: BOILER/LOW VOLTAGE CABINET BOILER (NORMAL) 6	Project: BRC-4	Unit & Issuer: ATEP0	Number: 1874	Revision: G
Drawn:	Luka Božičević							#Y
Approved:	Grga Kolić		Object: RDF Albioma Les Bois Rouge Reunion - France	Content: Terminal diagram =4LKD001AR+4LKD006AR-X 435 06	Drawing designation: BRC-4-ATEP0-1874-G			=4LKD001AR
Format:	A3							+4LKD006AR

Sheet: 609
Next: 610

Terminal diagram

Strip

=4LKD001AR+4LKD006AR-X 437 05

A SIDE								B SIDE
Placement	Target designation	Cable name and type	Conductor	Jumper		Wiring	Target designation
/437.5	=4 FES 022 MO+4 FES 022 MO-M63:U1	4LKD006AR/ 4FES022MO-B-01 U1000R2V 4G2.5 mm²	BN 2.5 mm²	'	1	BK 2.5 mm²	-KM 437 05:2/T1
/437.5	=4 FES 022 MO+4 FES 022 MO-M63:V1	4LKD006AR/ 4FES022MO-B-01 U1000R2V 4G2.5 mm²	BK 2.5 mm²	'	2	BK 2.5 mm²	-KM 437 05:4/T2
/437.5	=4 FES 022 MO+4 FES 022 MO-M63:W1	4LKD006AR/ 4FES022MO-B-01 U1000R2V 4G2.5 mm²	GY 2.5 mm²	'	3	BK 2.5 mm²	-KM 437 05:6/T3

Terminal diagram

Strip

=4LKD001AR+4LKD006AR-X 438 09

A SIDE						B SIDE
Placement	Target designation	Cable name and type	Conductor	Jumper	Wiring	Target designation
/438.9	=4 FES 022 MO+4 FES 022 MO-X1:3	4LKD006AR/ 4FES022MO-C-01 U1000R2V 5G1.5 mm²	BN 1.5 mm²		WH 1 mm²	-Q 437 05:21
/438.9	=4 FES 022 MO+4 FES 022 MO-X1:8	4LKD006AR/ 4FES022MO-C-01 U1000R2V 5G1.5 mm²	GY 1.5 mm²		WH 1 mm²	-K 439 10:11
					WH 1 mm²	-KM 437 05:74
/438.9		4LKD006AR/ 4FES022MO-C-01 U1000R2V 5G1.5 mm²	BK 1.5 mm²		WH 1 mm²	-KM 437 05:73
					WH 1 mm²	-KM 437 07:73
					WH 1 mm²	-S 438 07.1:23
/438.15	=4 FES 022 MO+4 FES 022 MO-X1:10:A	4LKD006AR/ 4FES022MO-C-01 U1000R2V 5G1.5 mm²	BU 1.5 mm²		WH 1 mm²	-K 439 10:21
					WH 1 mm²	-S 438 07.1:43

Date:	17.03.2026.	SINTAKSA A Voith Company	Client:	ANDRITZ TEP d.o.o. Ulica 108. brigade ZNG 84, 35000 Slavonski Brod, Croatia	Scope: BOILER/LOW VOLTAGE CABINET BOILER (NORMAL) 6	Project: BRC-4	Unit & Issuer: ATEP0	Number: 1874	Revision: G
Drawn:	Luka Božičević								#Y
Approved:	Grga Kolić		Object:	RDF Albioma Les Bois Rouge Reunion - France	Content: Terminal diagram =4LKD001AR+4LKD006AR-X 438 09	Drawing designation: BRC-4-ATEP0-1874-G		=4LKD001AR	Sheet: 611
Format:	A3							+4LKD006AR	Next: 612

Terminal diagram

Strip

=4LKD001AR+4LKD006AR-X 440 06

A SIDE						B SIDE
Placement	Target designation	Cable name and type	Conductor	Jumper	Wiring	Target designation
				1		
				2	RD 1 mm²	-KM 437 05:83
/440.11	=4 FES 022 MO+4 FES 022 MO-X1:5:A	4LKD006AR/ 4FES022MO-C-02 U1000R2V 7G1.5 mm²	1 1.5 mm²	3		
				4	3 1.5 mm²	=4 FES 022 MO+4 FES 022
				5	RD 1 mm²	-KM 437 05:84
				6	RD 1 mm²	-KM 437 07:84
/440.11	=4 FES 022 MO+4 FES 022 MO-X1:6:A	4LKD006AR/ 4FES022MO-C-02 U1000R2V 7G1.5 mm²	2 1.5 mm²	7	RD 1 mm²	-K 439 10:31
				8	RD 1 mm²	-S 438 07.1:54
				9		
				10		
				11		
				12		
				13	4 1.5 mm²	=4 FES 022 MO+4 FES 022
				14		
				15		
				16		

Date:	17.03.2026.	SINTAKSA A Voith Company	Client: ANDRITZ TEP d.o.o. Ulica 108. brigade ZNG 84, 35000 Slavonski Brod, Croatia	Scope: BOILER/LOW VOLTAGE CABINET BOILER (NORMAL) 6	Project: BRC-4	Unit & Issuer: ATEP0	Number: 1874	Revision: G
Drawn:	Luka Božičević							#Y
Approved:	Grga Kolić		Object: RDF Albioma Les Bois Rouge Reunion - France	Content: Terminal diagram =4LKD001AR+4LKD006AR-X 440 06	Drawing designation: BRC-4-ATEP0-1874-G			=4LKD001AR
Format:	A3							+4LKD006AR

Sheet: 612
Next: 613

Terminal diagram

Strip

=4LKD001AR+4LKD006AR-XB 442 03

A SIDE						B SIDE
Placement	Target designation	Cable name and type	Conductor	Jumper	Wiring	Target designation
+4LKD005AR/362.5	+4LKD005AR-XB 362 03:6:A		GY 1 mm²	1	GY 1 mm²	-HL 423 02:2
				2	GY 1 mm²	-HL 428 02:2
				3	GY 1 mm²	-HL 433 02:2
				4	GY 1 mm²	-HL 438 02:2
				5		
+4LKD007AR/533.11	+4LKD007AR-XB 533 11:1:A		GY 1 mm²	6		

Date:	17.03.2026.	SINTAKSA A Voith Company	Client:	ANDRITZ TEP d.o.o. Ulica 108. brigade ZNG 84, 35000 Slavonski Brod, Croatia	Scope: BOILER/LOW VOLTAGE CABINET BOILER (NORMAL) 6	Project: BRC-4	Unit & Issuer: ATEP0	Number: 1874	Revision: G
Drawn:	Luka Božičević								#Y
Approved:	Grga Kolić		Object:	RDF Albioma Les Bois Rouge Reunion - France	Content: Terminal diagram =4LKD001AR+4LKD006AR-XB 442 03	Drawing designation: BRC-4-ATEP0-1874-G			=4LKD001AR
Format:	A3								+4LKD006AR

Sheet: 613

Next: 614

Terminal diagram

Strip

=4LKD001AR+4LKD006AR-XS 461 03

A SIDE						B SIDE
Placement	Target designation	Cable name and type	Conductor	Jumper	Wiring	Target designation
				1		
				2	RD 1 mm²	-QB 421 09:11
				3		
				4	RD 1 mm²	-QB 421 09:14
				5		
				6		
				7		
				8		
				9		
				10		

Date:	17.03.2026.	SINTAKSA A Voith Company	Client:	ANDRITZ TEP d.o.o. Ulica 108. brigade ZNG 84, 35000 Slavonski Brod, Croatia	Scope: BOILER/LOW VOLTAGE CABINET BOILER (NORMAL) 6	Project: BRC-4	Unit & Issuer: ATEP0	Number: 1874	Revision: G
Drawn:	Luka Božičević								#Y
Approved:	Grga Kolić		Object:	RDF Albioma Les Bois Rouge Reunion - France	Content: Terminal diagram =4LKD001AR+4LKD006AR-XS 461 03	Drawing designation: BRC-4-ATEP0-1874-G			=4LKD001AR
Format:	A3								+4LKD006AR

Sheet: 614

Next: 615

Terminal diagram

Strip

=4LKD001AR+4LKD006AR-XS 465 02

A SIDE						B SIDE
Placement	Target designation	Cable name and type	Conductor	Jumper	Wiring	Target designation
				1	GNYE 2.5 mm²	-PE
				2		
				3		
				4		
				5		
				6		
				7		
				8		
				9		
				10		
				11		
				12		
				13		
				14		
				15		
				16		
				17		
/465.4	=4 FES 020 MO+4 FES 020 MO-X1:?:A	4LKD006AR/ 4FES020MO-C-02 U1000R2V 7G1.5 mm²	5 1.5 mm²	18		
/465.5	=4 FES 020 MO+4 FES 020 MO-X1:?:A	4LKD006AR/ 4FES020MO-C-02 U1000R2V 7G1.5 mm²	6 1.5 mm²	19		
/465.11	=4 FES 022 MO+4 FES 022 MO-X1:?:A	4LKD006AR/ 4FES022MO-C-02 U1000R2V 7G1.5 mm²	5 1.5 mm²	20		
/465.12	=4 FES 022 MO+4 FES 022 MO-X1:?:A	4LKD006AR/ 4FES022MO-C-02 U1000R2V 7G1.5 mm²	6 1.5 mm²	21		
/465.4	=4 FES 046 MO+4 FES 046 MO-X1:?:A	4LKD006AR/ 4FES046MO-C-02 U1000R2V 7G1.5 mm²	5 1.5 mm²	22		
/465.5	=4 FES 046 MO+4 FES 046 MO-X1:?:A	4LKD006AR/ 4FES046MO-C-02 U1000R2V 7G1.5 mm²	6 1.5 mm²	23		
/465.11	=4 FES 048 MO+4 FES 048 MO-X1:?:A	4LKD006AR/ 4FES048MO-C-02 U1000R2V 7G1.5 mm²	5 1.5 mm²	24		
/465.12	=4 FES 048 MO+4 FES 048 MO-X1:?:A	4LKD006AR/ 4FES048MO-C-02 U1000R2V 7G1.5 mm²	6 1.5 mm²	25		

Terminal diagram

Strip

=4LKD001AR+4LKD006AR-XS 465 02

A SIDE

B SIDE

Placement	Target designation	Cable name and type	Conductor	Jumper		Wiring	Target designation
					26		
					27		
					28		
					29		
					30		

Date:	17.03.2026.	SINTAKSA A Voith Company	Client:	ANDRITZ TEP d.o.o. Ulica 108. brigade ZNG 84, 35000 Slavonski Brod, Croatia	Scope: BOILER/LOW VOLTAGE CABINET BOILER (NORMAL) 6	Project: BRC-4	Unit & Issuer: ATEP0	Number: 1874	Revision: G
Drawn:	Luka Božičević								#Y
Approved:	Grga Kolić		Object:	RDF Albioma Les Bois Rouge Reunion - France	Content: Terminal diagram =4LKD001AR+4LKD006AR-XS 465 02	Drawing designation: BRC-4-ATEP0-1874-G			=4LKD001AR
Format:	A3								+4LKD006AR

Sheet: 616

Next: +4LKD007AR/1

SINTAKSA
A Voith Company

Ulica Domovinskog rata 104C,
21 000 Split, Hrvatska / Croatia
OIB: 32357958120
T: +385 1 2310 273
www.sintaksa.hr

SCHÉMA DE CÂBLAGE ÉLECTRIQUE

Projet / tâche:

RDF Albioma Les Bois Rouge
Reunion - France

Cadre:

BOILER/LOW VOLTAGE
CABINET BOILER (NORMAL)
7
+4LKD007AR

Client / acheteur:

ANDRITZ TEP d.o.o.
Ulica 108. brigade ZNG 84, 35000
Slavonski Brod, Croatia

Code du document:

BRC-4-ATEP0-1874-G

Date:
17.03.2026.

Date:	17.03.2026.	SINTAKSA A Voith Company	Client:	ANDRITZ TEP d.o.o. Ulica 108. brigade ZNG 84, 35000 Slavonski Brod, Croatia	Scope: BOILER/LOW VOLTAGE CABINET BOILER (NORMAL) 7	Project: BRC-4	Unit & Issuer: ATEP0	Number: 1874	Revision: G	#A
Drawn:	Luka Božičević									
Approved:	Grga Kolić		Object:	RDF Albioma Les Bois Rouge Reunion - France	Content: TITLE PAGE	Drawing designation: BRC-4-ATEP0-1874-G			=4LKD001AR	Sheet: 1
Format:	A3								+4LKD007AR	Next: 2

Table of contents

Page number	Page description	Remarks of creator	Date	Checked by	Revision
2	TABLE OF CONTENTS		2026/06/17		
3	TABLE OF CONTENTS		2026/06/17		
401	SUMMARIZED PARTS LIST		2026/05/28		
402	SUMMARIZED PARTS LIST		2026/06/08		
520	400VAC DISTRIBUTION		2026/05/28		G
521	WASTE WATER PUMP 1		2026/06/06		G
522	WASTE WATER PUMP 1 - CONTROL		2026/06/16		G
523	WASTE WATER PUMP 1 - SIGNALIZATION		2026/06/08		G
524	ASH PIT PUMP 1		2026/06/06		G
525	ASH PIT PUMP 1 - CONTROL		2026/06/16		G
526	ASH PIT PUMP 1 - SIGNALIZATION		2026/06/08		G
527	WASTE WATER PUMP 2		2026/06/06		G
528	WASTE WATER PUMP 2 - CONTROL		2026/06/16		G
529	WASTE WATER PUMP 2 - SIGNALIZATION		2026/06/06		G
530	ASH PIT PUMP 2		2026/06/06		G
531	ASH PIT PUMP 2 - CONTROL		2026/06/16		G
532	ASH PIT PUMP 2 - SIGNALIZATION		2026/06/06		G
533	LAMP TEST		2026/06/06		G
534	SIGNALIZATION		2026/06/08		G
551	SPARE		2026/06/15		G
561	COMMUNICATION		2026/05/28		G
581	Terminal diagram =4LKD001AR+4LKD005AR-X 342 05		2026/05/28		F
582	Terminal diagram =4LKD001AR+4LKD005AR-X 343 09		2026/05/28		F
583	Terminal diagram =4LKD001AR+4LKD005AR-X 345 06		2026/05/28		F
584	Terminal diagram =4LKD001AR+4LKD005AR-X 347 05		2026/05/28		F
585	Terminal diagram =4LKD001AR+4LKD005AR-X 348 09		2026/05/28		F
586	Terminal diagram =4LKD001AR+4LKD005AR-X 350 06		2026/05/28		F
587	Terminal diagram =4LKD001AR+4LKD005AR-X 352 05		2026/05/28		F
588	Terminal diagram =4LKD001AR+4LKD005AR-X 353 09		2026/05/28		F
589	Terminal diagram =4LKD001AR+4LKD005AR-X 355 06		2026/05/28		F
590	Terminal diagram =4LKD001AR+4LKD005AR-X 357 05		2026/05/28		F
591	Terminal diagram =4LKD001AR+4LKD005AR-X 358 09		2026/05/28		F
592	Terminal diagram =4LKD001AR+4LKD005AR-X 360 06		2026/05/28		F

Table of contents

Page number	Page description	Remarks of creator	Date	Checked by	Revision
593	Terminal diagram =4LKD001AR+4LKD005AR-XB 362 03		2026/05/28		F
594	Terminal diagram =4LKD001AR+4LKD005AR-XS 381 03		2026/05/28		F
595	Terminal diagram =4LKD001AR+4LKD005AR-XS 385 02		2026/05/28		F
596	Terminal diagram =4LKD001AR+4LKD005AR-XS 385 02		2026/05/28		F

Sorting number	Part number	Quantity	Manufacturer	Device	Device description	Device designation
1.	SOC.47290126	1	Socomec	Module location default ISOM DIGIWARE F-60	Network type - Power distribution, Control circuits, Medical Rated voltage - 24 VDC Type - Insulation Fault Locator Indication - Digital	-BE 561 06
2.	SE.ZB4BVBG1	12	Schneider Electric	white light block with body/fixing collar integral LED 24...120VAC/DC		-HL 522 02...-HL 522 04;-HL 525 02...-HL 525 04;-HL 528 02...-HL 528 04;-HL 531 02...-HL 531 04
3.	SE.ZB4BV043	4	Schneider Electric	Red pilot light head Ø22 plain lens for integral LED	Complete body light block assembly, Harmony XB4, metal, universal LED, body fixing collar, 24...120V AC DC Head for pilot light: Red	-HL 522 02;-HL 525 02;-HL 528 02;-HL 531 02
4.	SE.ZBZ32	12	Schneider Electric	Harmony XB4	Legend holder, plastic	-HL 522 02...-HL 522 04;-HL 525 02...-HL 525 04;-HL 528 02...-HL 528 04;-HL 531 02...-HL 531 04
5.	SE.ZB4BV033	4	Schneider Electric	Green pilot light head Ø22 plain lens for integral LED	Complete body light block assembly, Harmony XB4, metal, universal LED, body fixing collar, 24...120V AC DC Head for pilot light: Green	-HL 522 03;-HL 525 03;-HL 528 03;-HL 531 03
6.	SE.ZB4BV053	4	Schneider Electric	Orange pilot light head Ø22 plain lens for integral LED	Complete body light block assembly, Harmony XB4, metal, universal LED, body fixing collar, 24...120V AC DC Head for pilot light: Orange	-HL 522 04;-HL 525 04;-HL 528 04;-HL 531 04
7.	SE.RXM4AB2P7	8	Schneider Electric	Miniature Plug-in relay - Zelio RXM 4 C/O 230 V AC 6 A with LED	Miniature Plug-in relay - Zelio RXM 4 C/O 230 V AC 6 A with LED	-K 522 14;-K 522 16;-K 525 14;-K 525 16;-K 528 14;-K 528 16;-K 531 14;-K 531 16
8.	SE.RXZE2S114M	8	Schneider Electric	Socket	For RXM2/RXM4 relays Screw connectors Separate contact 4 C/O	-K 522 14;-K 522 16;-K 525 14;-K 525 16;-K 528 14;-K 528 16;-K 531 14;-K 531 16
9.	SE.RXM041FU7	8	Schneider Electric	Protection module	RC circuit - 110..240 V AC - for RPZ/RXZ sockets	-K 522 14;-K 522 16;-K 525 14;-K 525 16;-K 528 14;-K 528 16;-K 531 14;-K 531 16
10.	SE.LC1D12P7	4	Schneider Electric	Contactor TeSys LC1-D - 3P - AC-3 440V 12 A, Coil 230 V AC	Contactor TeSys LC1-D - 3P - AC-3 440V 18 A, Coil 230 V AC	-KM 521 05;-KM 524 05;-KM 527 05;-KM 530 05
11.	SE.LADN31	4	Schneider Electric	Auxiliary contact block TeSys - 3 NO + 1 NC,screw-clamps terminals	Auxiliary contact block TeSys - 3 NO + 1 NC,screw-clamps terminals	-KM 521 05;-KM 524 05;-KM 527 05;-KM 530 05
12.	SE.LAD4RCU	4	Schneider Electric	RC Transient Suppressor 110 TO 250 VAC	RC Transient Suppressor 110 TO 250 VAC	-KM 521 05;-KM 524 05;-KM 527 05;-KM 530 05
13.	SE.GV2P14	2	Schneider Electric	Motor circuit breaker	3-pole 6-10 A Thermal-magnetic	-Q 521 05;-Q 527 05
14.	SE.GVAE11	4	Schneider Electric	Auxiliary contact block	1NO+1NC Front mounting For GV2	-Q 521 05;-Q 524 05;-Q 527 05;-Q 530 05
15.	SE.GVAD0110	4	Schneider Electric	TeSys GV AD0110 - auxiliary contact - 1 NO + 1 NC (fault)		-Q 521 05;-Q 524 05;-Q 527 05;-Q 530 05
16.	SE.A9F74202	8	Schneider Electric	2-pole MCB, 2A/C	Nominal current: 2 A Tripping curve: C	-Q 522 04;-Q 522 14;-Q 525 04;-Q 525 14;-Q 528 04;-Q 528 14;-Q 531 04;-Q 531 14
17.	SE.GV2P16	2	Schneider Electric	Thermal Magnetic Motor Circuit Breaker TeSys GV2P - 3P - 9...14 A	Thermal Magnetic Motor Circuit Breaker TeSys GV2P - 3P - 9...14 A	-Q 524 05;-Q 530 05
18.	SE.C10F3TM050	1	Schneider Electric	Circuit breaker, ComPacT NSX100B	36kA/415VAC 3 poles TMD trip unit 50A	-QB 520 09
19.	SE.29450	1	Schneider Electric	Auxiliary contact 1 OF or 1 SD or 1 SDE or 1 SDV	Auxiliary contact 1 OF or 1 SD or 1 SDE or 1 SDV	-QB 520 09
20.	SE.LV429337T	1	Schneider Electric	Direct rotary handle, ComPacT NSX 100/160/250, black handle, IP40	Direct rotary handle, ComPacT NSX 100/160/250, black handle, IP40	-QB 520 09
21.	SE.LVS04033	1	Schneider Electric	LINERGY DP	LINERGY DP 3P D.BLK/COMPACT 250A 27HOLES	-QB 520 09

Sorting number	Part number	Quantity	Manufacturer	Device	Device description	Device designation
22.	SE.LV429517	1	Schneider Electric	Insulation accessories 1 long terminal shield for breaker or plug-in base, 3P - NSX100...250	Insulation accessories 1 long terminal shield for breaker or plug-in base, 3P - NSX100...250	-QB 520 09
23.	PXC.2950129	1	Phoenix Contact	Component for protective circuit	Diode module, with 14 diodes, common anode, diode type 1N 4007	-R 533 03
24.	PXC.2954882	1	Phoenix Contact	Diode block	Diode module, with eight diodes, common anode, diode type 1N 5408	-R 533 07
25.	PXC.2950116	1	Phoenix Contact	Component for protective circuit	Diode module, with 14 diodes, common cathode, diode type 1N 4007	-R 533 10
26.	PXC.2954879	1	Phoenix Contact	Component for protective circuit	Diode module, with eight diodes, common cathode, diode type 1N 5408	-R 533 14
27.	SE.XPSBAC34AP	4	Schneider Electric	Safety module	Harmony Safety Automation Estop or guard ,Harmony XPS, connected to supply terminals 48-240 V AC/DC , no inputs, screw	-RP 522 05;-RP 525 05;-RP 528 05;-RP 531 05
28.	SE.XB4BA21	4	Schneider Electric	Black flush complete pushbutton Ø22 spring return 1NO "unmarked"	Black flush complete pushbutton Ø22 spring return 1NO	-S 522 06;-S 525 06;-S 528 06;-S 531 06
29.	SE.XB4BD33	4	Schneider Electric	Selector switch, BLACK, 1-0-2, 2NO	Metal Black Ø22 3 positions 2 NO	-S 522 06.1;-S 525 06.1;-S 528 06.1;-S 531 06.1
30.	SOC.47506030	4	Socomec	TORES LOCATION SENSOR DELTA IP-30 (30mm)	Fault locating differential transformer IP-30 Maximal diameter of cable: 30mm	-TC 521 05;-TC 524 05;-TC 527 05;-TC 530 05
31.	SOC.47290590	4	Socomec	ISOM T-15	Connection adaptor ISOM T-15 to ISOM Digiware F-60 modules	-TC 521 05;-TC 524 05;-TC 527 05;-TC 530 05
32.	PXC.3209510	126	Phoenix Contact	PT 2,5 - Feed-through terminal block	Feed-through terminal block, nom. voltage: 800 V, nominal current: 24 A, number of connections: 2, number of positions: 1, connection method: Push-in connection, Rated cross section: 2.5 mm2, cross section: 0.14 mm2 - 4 mm2, mounting type: NS 35/7,5, NS 35/15, color: gray	-X 521 05;-X 522 09;-X 523 06;-X 524 05;-X 525 09;-X 526 06;-X 527 05;-X 528 09;-X 529 06;-X 530 05;-X 531 09;-X 532 06;-XB 533 03;-XB 533 11;-XS 534 03;-XS 551 02

1	2	3	4	5	6	7	8	9	10	11	12	13	14	15	16	17	18

Cable name: **4LKD007AR/ 4SEO209PO-B-01**

Cable type: **U1000R2V** No. of conn., diameter, length: **4G2.5 mm² /**

Remark:

Function text	Page / Column	FROM	Terminal	Conductor	TO	Terminal	Page / Column	Function text
	=4LKD001AR+4LKD007AR/521.5	=4LKD001AR+4LKD007AR-X 521 05	1:A	**BN**	=4SEO209PO+4SEO209PO-M22	U1	=4LKD001AR+4LKD007AR/521.5	
[4 SEO 209 PO] WASTE WATER PUMP 1	=4LKD001AR+4LKD007AR/521.5	=4LKD001AR+4LKD007AR-X 521 05	2:A	**BK**	=4SEO209PO+4SEO209PO-M22	V1	=4LKD001AR+4LKD007AR/521.5	
=	=4LKD001AR+4LKD007AR/521.5	=4LKD001AR+4LKD007AR-X 521 05	3:A	**GY**	=4SEO209PO+4SEO209PO-M22	W1	=4LKD001AR+4LKD007AR/521.5	
	=4LKD001AR+4LKD007AR/521.7	=4LKD001AR+4LKD007AR-PE		**GNYE**	=4SEO209PO+4SEO209PO-M22	PE	=4LKD001AR+4LKD007AR/521.5	

Cable name: **4LKD007AR/ 4SEO209PO-C-01**

Cable type: **U1000R2V** No. of conn., diameter, length: **5G1.5 mm² /**

Remark:

Function text	Page / Column	FROM	Terminal	Conductor	TO	Terminal	Page / Column	Function text
LOCAL CONTROL	=4LKD001AR+4LKD007AR/522.9	=4LKD001AR+4LKD007AR-X 522 09	1:A	**BN**	=4SEO209PO+4SEO209PO-S 156 08	21	=4LKD001AR+4LKD007AR/522.9	LOCAL STOP
=	=4LKD001AR+4LKD007AR/522.11	=4LKD001AR+4LKD007AR-X 522 09	4:A	**BK**	=4SEO209PO+4SEO209PO-S 156 08.1	13	=4LKD001AR+4LKD007AR/522.9	FORWARD LOCAL
=	=4LKD001AR+4LKD007AR/522.9	=4LKD001AR+4LKD007AR-X 522 09	2:A	**GY**	=4SEO209PO+4SEO209PO-S 156 08.1	14	=4LKD001AR+4LKD007AR/522.9	=
	=4LKD001AR+4LKD007AR/551.2	=4LKD001AR+4LKD007AR-XS 551 02	14:A	**BU**	=4SEO209PO+4SEO209PO-X?	?:A	=4LKD001AR+4LKD007AR/551.2	
	=4LKD001AR+4LKD007AR/551.4	=4LKD001AR+4LKD007AR-PE		**GNYE**	=4SEO209PO+4SEO209PO-PE		=4LKD001AR+4LKD007AR/551.3	

Cable name: **4LKD007AR/ 4SEO209PO-C-02**

Cable type: **U1000R2V** No. of conn., diameter, length: **3G1.5 mm² /**

Remark:

Function text	Page / Column	FROM	Terminal	Conductor	TO	Terminal	Page / Column	Function text
READY	=4LKD001AR+4LKD007AR/523.10	=4LKD001AR+4LKD007AR-X 523 06	3:A	**BN**	=4SEO209PO+4SEO209PO-S 156 08	31	=4LKD001AR+4LKD007AR/523.10	LOCAL STOP
=	=4LKD001AR+4LKD007AR/523.10	=4LKD001AR+4LKD007AR-X 523 06	6:A	**BU**	=4SEO209PO+4SEO209PO-S 156 08	32	=4LKD001AR+4LKD007AR/523.10	=
				GNYE				

Cable name: **4LKD007AR/ 4SEO213PO-B-01**

Cable type: **U1000R2V** No. of conn., diameter, length: **4G2.5 mm² /**

Remark:

Function text	Page / Column	FROM	Terminal	Conductor	TO	Terminal	Page / Column	Function text
	=4LKD001AR+4LKD007AR/527.5	=4LKD001AR+4LKD007AR-X 527 05	1:A	**BN**	=4SEO213PO+4SEO213PO-M22	U1	=4LKD001AR+4LKD007AR/527.5	
[4 SEO 213 PO] WASTE WATER PUMP 2	=4LKD001AR+4LKD007AR/527.5	=4LKD001AR+4LKD007AR-X 527 05	2:A	**BK**	=4SEO213PO+4SEO213PO-M22	V1	=4LKD001AR+4LKD007AR/527.5	
=	=4LKD001AR+4LKD007AR/527.5	=4LKD001AR+4LKD007AR-X 527 05	3:A	**GY**	=4SEO213PO+4SEO213PO-M22	W1	=4LKD001AR+4LKD007AR/527.5	
	=4LKD001AR+4LKD007AR/527.7	=4LKD001AR+4LKD007AR-PE		**GNYE**	=4SEO213PO+4SEO213PO-M22	PE	=4LKD001AR+4LKD007AR/527.5	

1	2	3	4	5	6	7	8	9	10	11	12	13	14	15	16	17	18

Cable name: **4LKD007AR/ 4SEO213PO-C-01**
Cable type: **U1000R2V** No. of conn., diameter, length: **5G1.5 mm² /**
Remark:

Function text	Page / Column	FROM	Terminal	Conductor	TO	Terminal	Page / Column	Function text
LOCAL CONTROL	=4LKD001AR+4LKD007AR/528.9	=4LKD001AR+4LKD007AR-X 528 09	1:A	**BN**	=4SEO213PO+4SEO213PO-S 156 08	21	=4LKD001AR+4LKD007AR/528.9	LOCAL STOP
=	=4LKD001AR+4LKD007AR/528.11	=4LKD001AR+4LKD007AR-X 528 09	4:A	**BK**	=4SEO213PO+4SEO213PO-S 156 08.1	13	=4LKD001AR+4LKD007AR/528.9	FORWARD LOCAL
=	=4LKD001AR+4LKD007AR/528.9	=4LKD001AR+4LKD007AR-X 528 09	2:A	**GY**	=4SEO213PO+4SEO213PO-S 156 08.1	14	=4LKD001AR+4LKD007AR/528.9	=
	=4LKD001AR+4LKD007AR/551.2	=4LKD001AR+4LKD007AR-XS 551 02	20:A	**BU**	=4SEO213PO+4SEO213PO-X?	?:A	=4LKD001AR+4LKD007AR/551.2	
	=4LKD001AR+4LKD007AR/551.4	=4LKD001AR+4LKD007AR-PE		**GNYE**	=4SEO213PO+4SEO213PO-PE		=4LKD001AR+4LKD007AR/551.3	

Cable name: **4LKD007AR/ 4SEO213PO-C-02**
Cable type: **U1000R2V** No. of conn., diameter, length: **3G1.5 mm² /**
Remark:

Function text	Page / Column	FROM	Terminal	Conductor	TO	Terminal	Page / Column	Function text
READY	=4LKD001AR+4LKD007AR/529.10	=4LKD001AR+4LKD007AR-X 529 06	3:A	**BN**	=4SEO213PO+4SEO213PO-S 156 08	31	=4LKD001AR+4LKD007AR/529.10	LOCAL STOP
=	=4LKD001AR+4LKD007AR/529.10	=4LKD001AR+4LKD007AR-X 529 06	6:A	**BU**	=4SEO213PO+4SEO213PO-S 156 08	32	=4LKD001AR+4LKD007AR/529.10	=
				GNYE				

Cable name: **4LKD007AR/ 4SEO264PO-B-01**
Cable type: **U1000R2V** No. of conn., diameter, length: **4G2.5 mm² /**
Remark:

Function text	Page / Column	FROM	Terminal	Conductor	TO	Terminal	Page / Column	Function text
	=4LKD001AR+4LKD007AR/524.5	=4LKD001AR+4LKD007AR-X 524 05	1:A	**BN**	=4SEO264PO+4SEO264PO-M22	U1	=4LKD001AR+4LKD007AR/524.5	
[4 SEO 264 PO] ASH PIT PUMP 1	=4LKD001AR+4LKD007AR/524.5	=4LKD001AR+4LKD007AR-X 524 05	2:A	**BK**	=4SEO264PO+4SEO264PO-M22	V1	=4LKD001AR+4LKD007AR/524.5	
=	=4LKD001AR+4LKD007AR/524.5	=4LKD001AR+4LKD007AR-X 524 05	3:A	**GY**	=4SEO264PO+4SEO264PO-M22	W1	=4LKD001AR+4LKD007AR/524.5	
	=4LKD001AR+4LKD007AR/524.7	=4LKD001AR+4LKD007AR-PE		**GNYE**	=4SEO264PO+4SEO264PO-M22	PE	=4LKD001AR+4LKD007AR/524.5	

Cable name: **4LKD007AR/ 4SEO264PO-C-01**
Cable type: **U1000R2V** No. of conn., diameter, length: **5G1.5 mm² /**
Remark:

Function text	Page / Column	FROM	Terminal	Conductor	TO	Terminal	Page / Column	Function text
LOCAL CONTROL	=4LKD001AR+4LKD007AR/525.9	=4LKD001AR+4LKD007AR-X 525 09	1:A	**BN**	=4SEO264PO+4SEO264PO-S 156 08	21	=4LKD001AR+4LKD007AR/525.9	LOCAL STOP
=	=4LKD001AR+4LKD007AR/525.11	=4LKD001AR+4LKD007AR-X 525 09	4:A	**BK**	=4SEO264PO+4SEO264PO-S 156 08.1	13	=4LKD001AR+4LKD007AR/525.9	FORWARD LOCAL
=	=4LKD001AR+4LKD007AR/525.9	=4LKD001AR+4LKD007AR-X 525 09	2:A	**GY**	=4SEO264PO+4SEO264PO-S 156 08.1	14	=4LKD001AR+4LKD007AR/525.9	=
	=4LKD001AR+4LKD007AR/551.10	=4LKD001AR+4LKD007AR-XS 551 02	17:A	**BU**	=4SEO264PO+4SEO264PO-X?	?:A	=4LKD001AR+4LKD007AR/551.10	
	=4LKD001AR+4LKD007AR/551.12	=4LKD001AR+4LKD007AR-PE		**GNYE**	=4SEO264PO+4SEO264PO-PE		=4LKD001AR+4LKD007AR/551.11	

Cable name: **4LKD007AR/ 4SEO264PO-C-02**
Cable type: **U1000R2V** No. of conn., diameter, length: **3G1.5 mm² /**
Remark:

Function text	Page / Column	FROM	Terminal	Conductor	TO	Terminal	Page / Column	Function text
READY	=4LKD001AR+4LKD007AR/526.10	=4LKD001AR+4LKD007AR-X 526 06	3:A	**BN**	=4SEO264PO+4SEO264PO-S 156 08	31	=4LKD001AR+4LKD007AR/526.10	LOCAL STOP
=	=4LKD001AR+4LKD007AR/526.10	=4LKD001AR+4LKD007AR-X 526 06	6:A	**BU**	=4SEO264PO+4SEO264PO-S 156 08	32	=4LKD001AR+4LKD007AR/526.10	=
				GNYE				

1	2	3	4	5	6	7	8	9	10	11	12	13	14	15	16	17	18

Cable name: **4LKD007AR/ 4SEO269PO-B-01**

Cable type: **U1000R2V** | No. of conn., diameter, length: **4G2.5 mm² /**

Remark:

Function text	Page / Column	FROM	Terminal	Conductor	TO	Terminal	Page / Column	Function text
	=4LKD001AR+4LKD007AR/530.5	=4LKD001AR+4LKD007AR-X 530 05	1:A	**BN**	=4SEO269PO+4SEO269PO-M22	U1	=4LKD001AR+4LKD007AR/530.5	
[4 SEO 269 PO] ASH PIT PUMP 2	=4LKD001AR+4LKD007AR/530.5	=4LKD001AR+4LKD007AR-X 530 05	2:A	**BK**	=4SEO269PO+4SEO269PO-M22	V1	=4LKD001AR+4LKD007AR/530.5	
=	=4LKD001AR+4LKD007AR/530.5	=4LKD001AR+4LKD007AR-X 530 05	3:A	**GY**	=4SEO269PO+4SEO269PO-M22	W1	=4LKD001AR+4LKD007AR/530.5	
	=4LKD001AR+4LKD007AR/530.7	=4LKD001AR+4LKD007AR-PE		**GNYE**	=4SEO269PO+4SEO269PO-M22	PE	=4LKD001AR+4LKD007AR/530.5	

Cable name: **4LKD007AR/ 4SEO269PO-C-01**

Cable type: **U1000R2V** | No. of conn., diameter, length: **5G1.5 mm² /**

Remark:

Function text	Page / Column	FROM	Terminal	Conductor	TO	Terminal	Page / Column	Function text
LOCAL CONTROL	=4LKD001AR+4LKD007AR/531.9	=4LKD001AR+4LKD007AR-X 531 09	1:A	**BN**	=4SEO269PO+4SEO269PO-S 156 08	21	=4LKD001AR+4LKD007AR/531.9	LOCAL STOP
=	=4LKD001AR+4LKD007AR/531.11	=4LKD001AR+4LKD007AR-X 531 09	4:A	**BK**	=4SEO269PO+4SEO269PO-S 156 08.1	13	=4LKD001AR+4LKD007AR/531.9	FORWARD LOCAL
=	=4LKD001AR+4LKD007AR/531.9	=4LKD001AR+4LKD007AR-X 531 09	2:A	**GY**	=4SEO269PO+4SEO269PO-S 156 08.1	14	=4LKD001AR+4LKD007AR/531.9	=
	=4LKD001AR+4LKD007AR/551.10	=4LKD001AR+4LKD007AR-XS 551 02	23:A	**BU**	=4SEO269PO+4SEO269PO-X?	?:A	=4LKD001AR+4LKD007AR/551.10	
	=4LKD001AR+4LKD007AR/551.12	=4LKD001AR+4LKD007AR-PE		**GNYE**	=4SEO269PO+4SEO269PO-PE		=4LKD001AR+4LKD007AR/551.11	

Cable name: **4LKD007AR/ 4SEO269PO-C-02**

Cable type: **U1000R2V** | No. of conn., diameter, length: **3G1.5 mm² /**

Remark:

Function text	Page / Column	FROM	Terminal	Conductor	TO	Terminal	Page / Column	Function text
READY	=4LKD001AR+4LKD007AR/532.10	=4LKD001AR+4LKD007AR-X 532 06	3:A	**BN**	=4SEO269PO+4SEO269PO-S 156 08	31	=4LKD001AR+4LKD007AR/532.10	LOCAL STOP
=	=4LKD001AR+4LKD007AR/532.10	=4LKD001AR+4LKD007AR-X 532 06	6:A	**BU**	=4SEO269PO+4SEO269PO-S 156 08	32	=4LKD001AR+4LKD007AR/532.10	=
				GNYE				

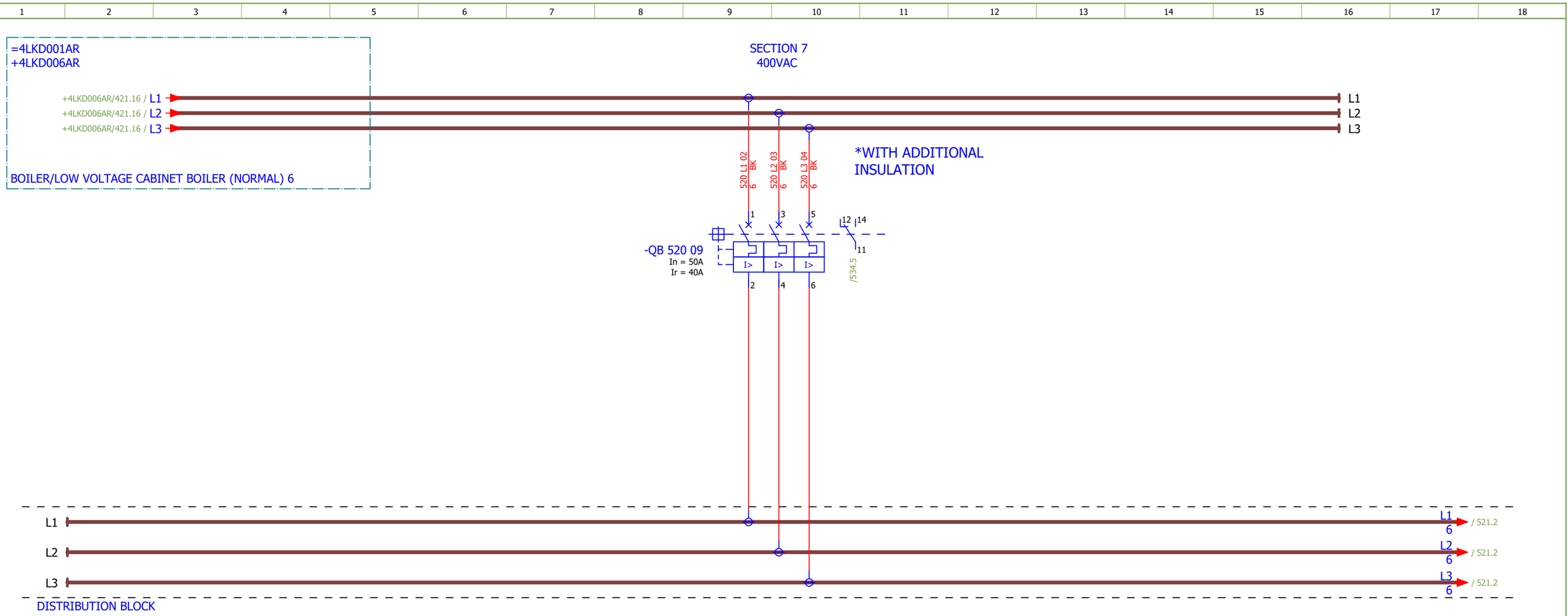

NOTE:
Conducteur de phase L1 avec manchon noir
Conducteur de phase L2 avec manchon marron
Conducteur de phase L3 avec manchon rouge

Date:	17.03.2026.	SINTAKSA A Voith Company	Client:	ANDRITZ TEP d.o.o. Ulica 108. brigade ZNG 84, 35000 Slavonski Brod, Croatia	Scope: BOILER/LOW VOLTAGE CABINET BOILER (NORMAL) 7	Project: BRC-4	Unit & Issuer: ATEP0	Number: 1874	Revision: G
Drawn:	Luka Božičević								#D
Approved:	Grga Kolić		Object:	RDF Albioma Les Bois Rouge Reunion - France	Content: 400VAC DISTRIBUTION	Drawing designation: BRC-4-ATEP0-1874-G			=4LKD001AR
Format:	A3								+4LKD007AR

Sheet: 520
Next: 521

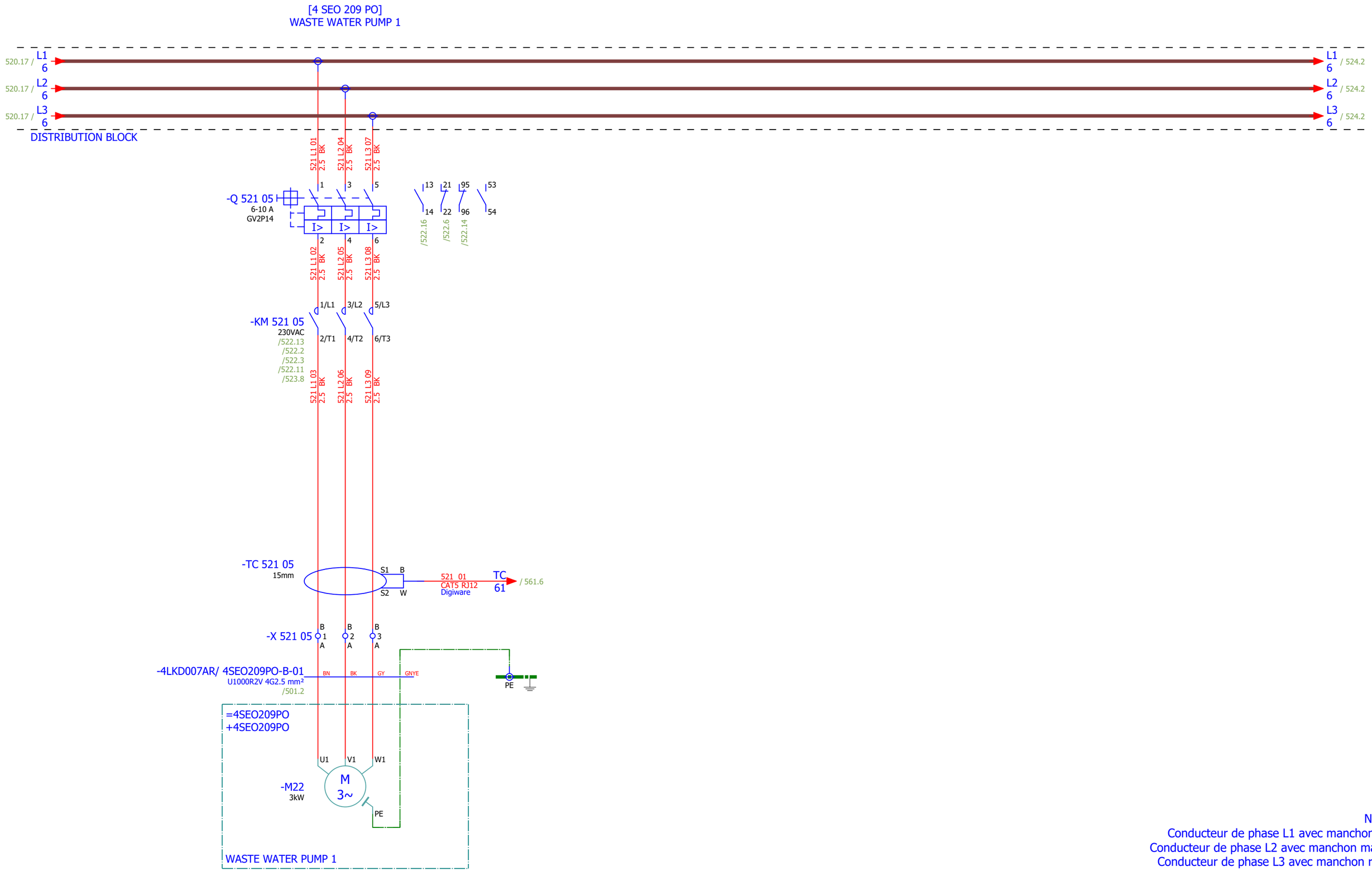

NOTE:
Conducteur de phase L1 avec manchon noir
Conducteur de phase L2 avec manchon marron
Conducteur de phase L3 avec manchon rouge

Date:	17.03.2026.	SINTAKSA A Voith Company	Client:	ANDRITZ TEP d.o.o. Ulica 108. brigade ZNG 84, 35000 Slavonski Brod, Croatia	Scope: BOILER/LOW VOLTAGE CABINET BOILER (NORMAL) 7	Project: BRC-4	Unit & Issuer: ATEP0	Number: 1874	Revision: G
Drawn:	Luka Božičević								#D
Approved:	Grga Kolić		Object:	RDF Albioma Les Bois Rouge Reunion - France	Content: WASTE WATER PUMP 1	Drawing designation: BRC-4-ATEP0-1874-G		=4LKD001AR	Sheet: 521
Format:	A3							+4LKD007AR	Next: 522

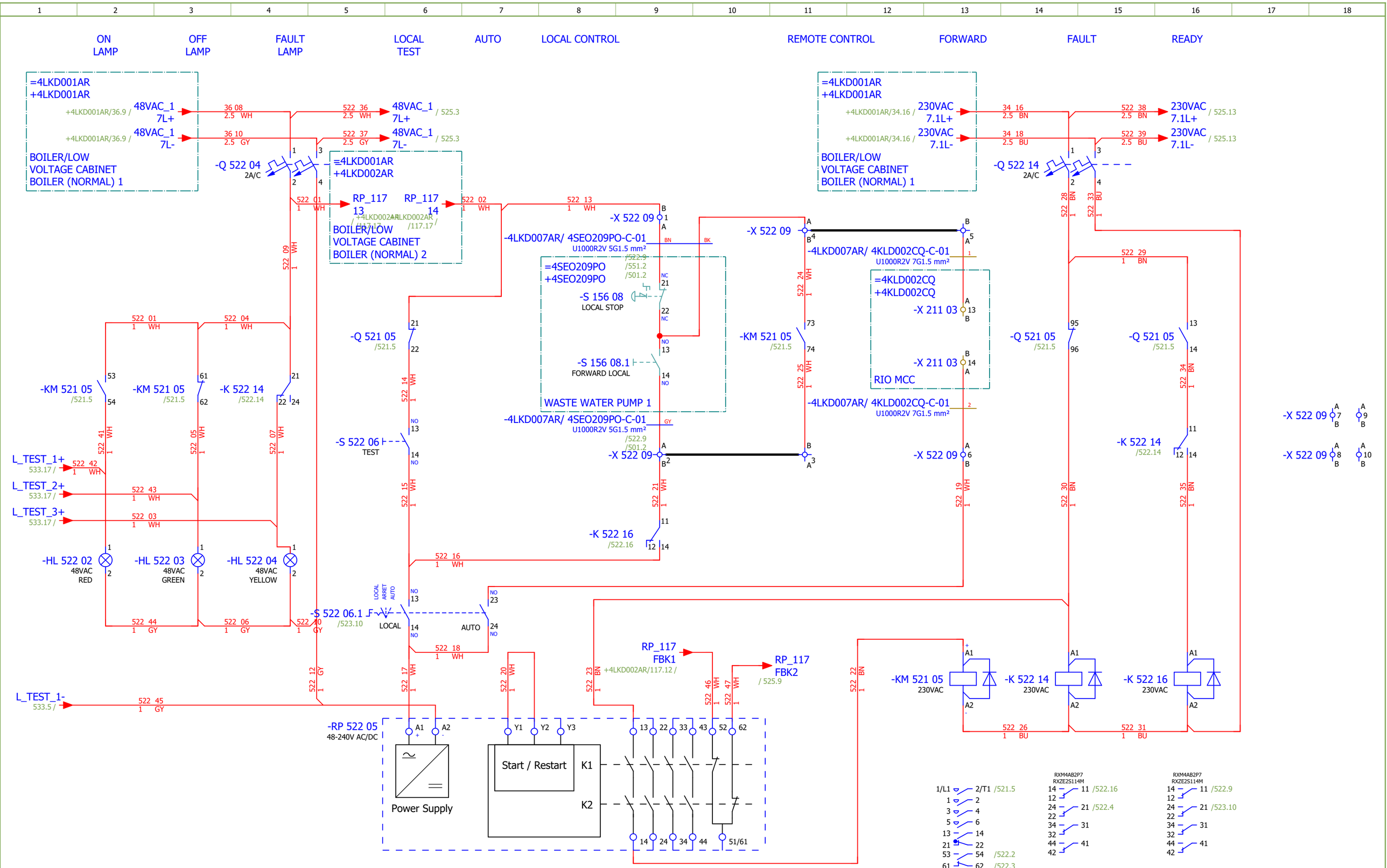

Date:	17.03.2026.	SINTAKSA A Voith Company	Client:	ANDRITZ TEP d.o.o. Ulica 108. brigade ZNG 84, 35000 Slavonski Brod, Croatia	Scope:	BOILER/LOW VOLTAGE CABINET BOILER (NORMAL) 7	Project: BRC-4	Unit & Issuer: ATEP0	Number: 1874	Revision: G
Drawn:	Luka Božičević									#D
Approved:	Grga Kolić		Object:	RDF Albioma Les Bois Rouge Reunion - France	Content:	WASTE WATER PUMP 1 - CONTROL	Drawing designation: BRC-4-ATEP0-1874-G		=4LKD001AR	Sheet: 522
Format:	A3								+4LKD007AR	Next: 523

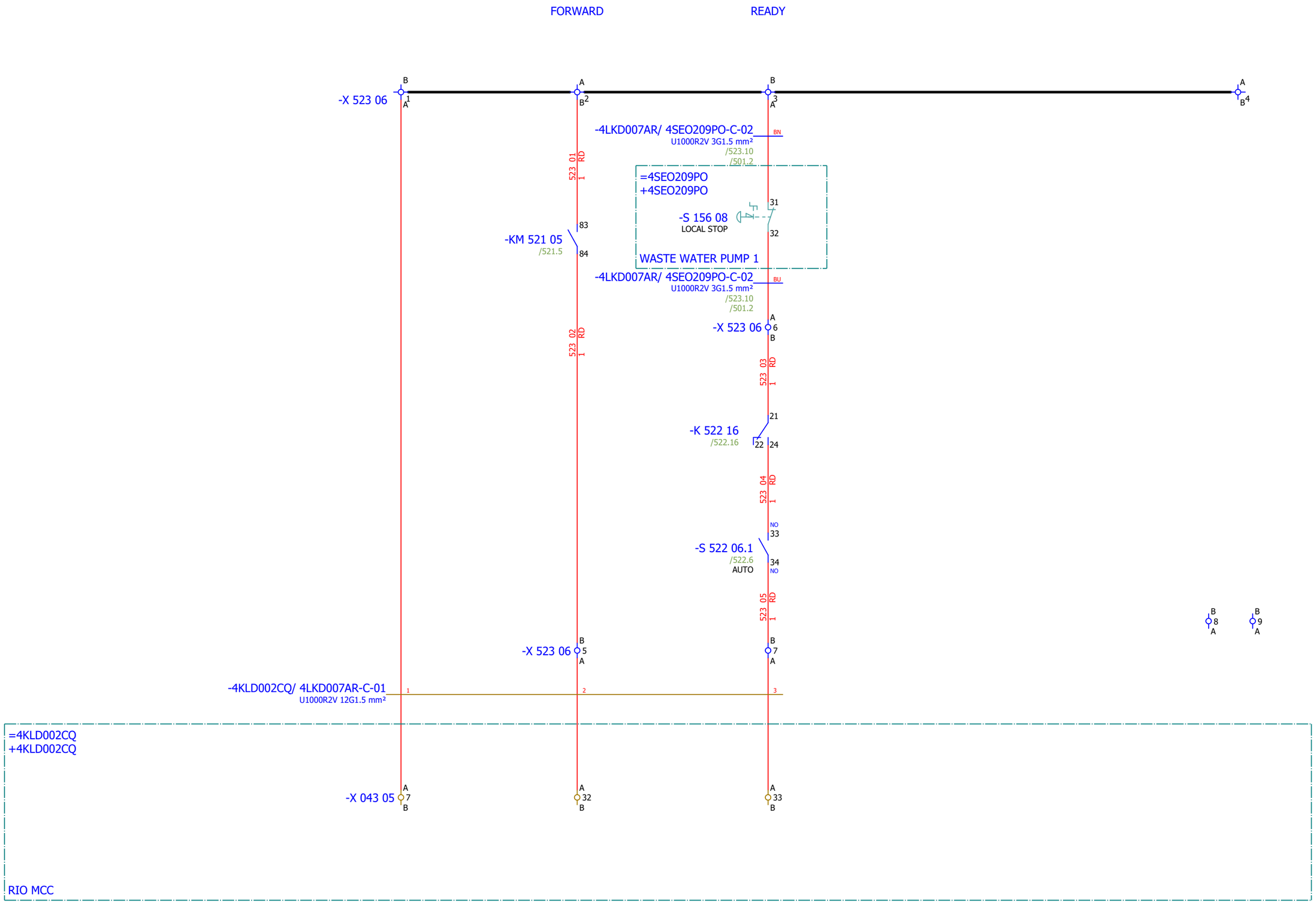

Date:	17.03.2026.	SINTAKSA A Voith Company	Client:	ANDRITZ TEP d.o.o. Ulica 108. brigade ZNG 84, 35000 Slavonski Brod, Croatia	Scope:	BOILER/LOW VOLTAGE CABINET BOILER (NORMAL) 7	Project: BRC-4	Unit & Issuer: ATEP0	Number: 1874	Revision: G
Drawn:	Luka Božičević									#D
Approved:	Grga Kolić		Object:	RDF Albioma Les Bois Rouge Reunion - France	Content:	WASTE WATER PUMP 1 - SIGNALIZATION	Drawing designation: BRC-4-ATEP0-1874-G			=4LKD001AR
Format:	A3									+4LKD007AR

Sheet: 523
Next: 524

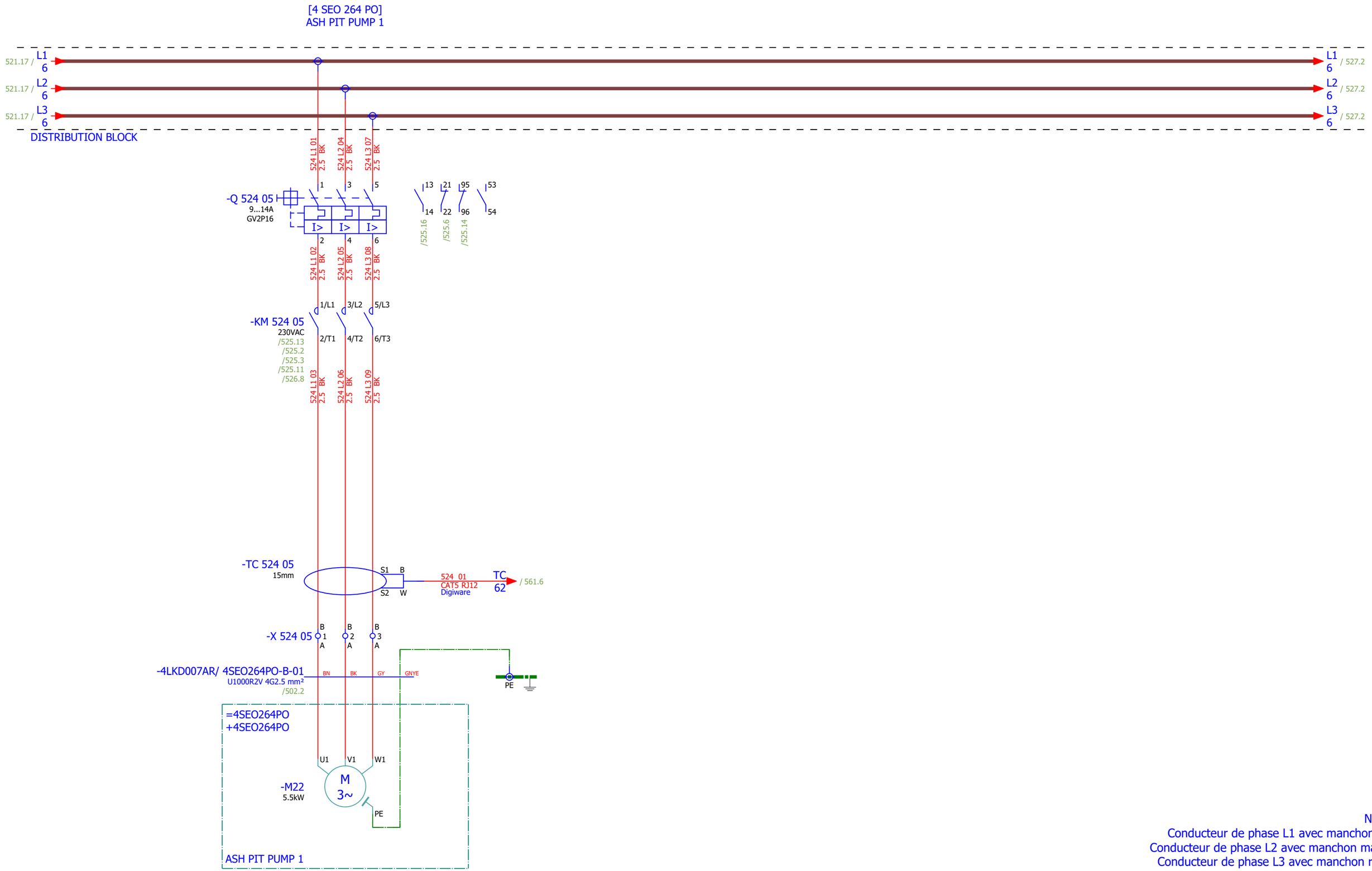

NOTE:
Conducteur de phase L1 avec manchon noir
Conducteur de phase L2 avec manchon marron
Conducteur de phase L3 avec manchon rouge

Date:	17.03.2026.	SINTAKSA A Voith Company	Client:	ANDRITZ TEP d.o.o. Ulica 108. brigade ZNG 84, 35000 Slavonski Brod, Croatia	Scope: BOILER/LOW VOLTAGE CABINET BOILER (NORMAL) 7	Project: BRC-4	Unit & Issuer: ATEP0	Number: 1874	Revision: G
Drawn:	Luka Božičević								#D
Approved:	Grga Kolić		Object:	RDF Albioma Les Bois Rouge Reunion - France	Content: ASH PIT PUMP 1	Drawing designation: BRC-4-ATEP0-1874-G		=4LKD001AR	Sheet: 524
Format:	A3							+4LKD007AR	Next: 525

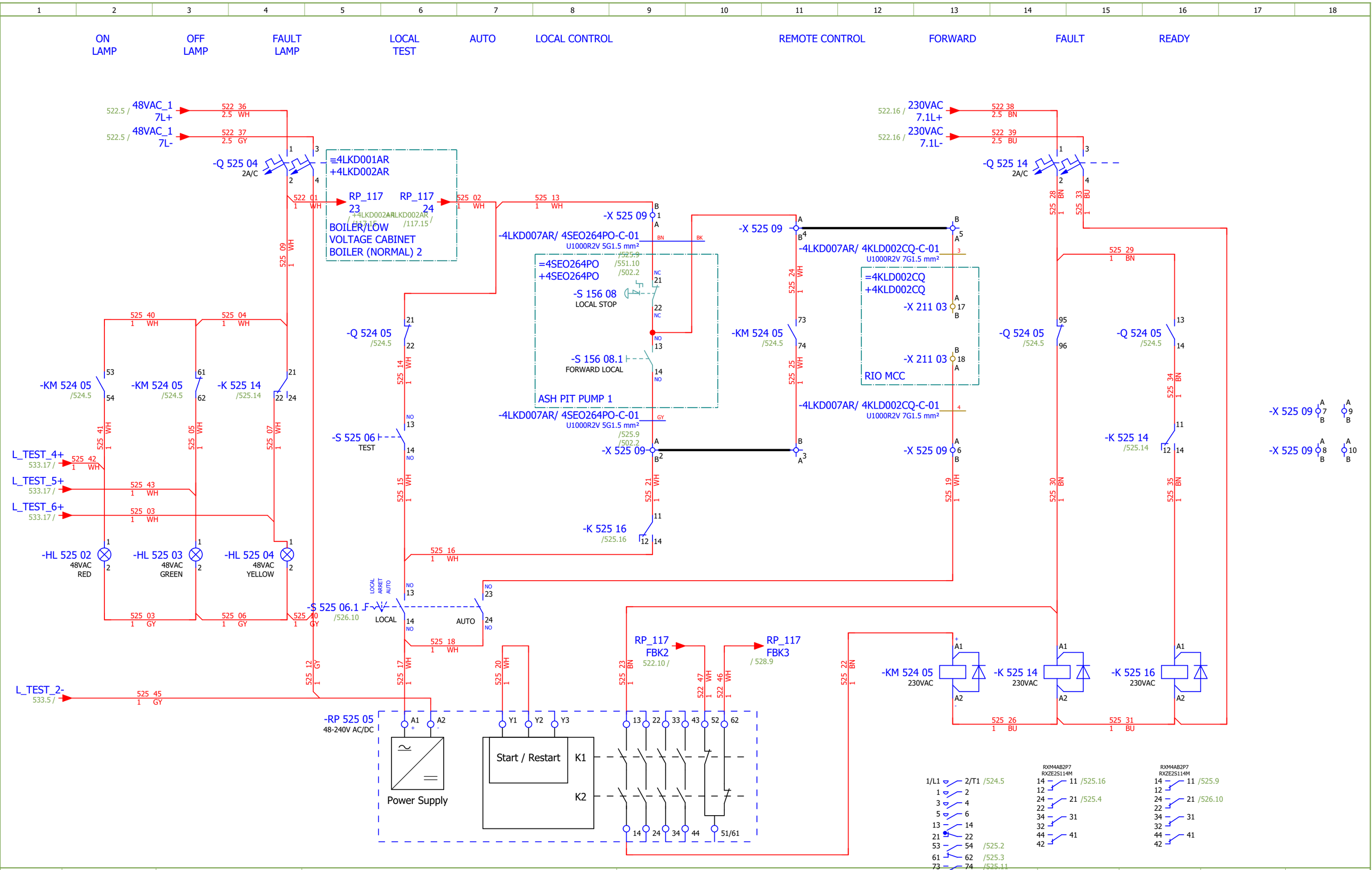

Date:	17.03.2026.	SINTAKSA A Voith Company	Client:	ANDRITZ TEP d.o.o. Ulica 108. brigade ZNG 84, 35000 Slavonski Brod, Croatia	Scope:	BOILER/LOW VOLTAGE CABINET BOILER (NORMAL) 7	Project: BRC-4	Unit & Issuer: ATEP0	Number: 1874	Revision: G
Drawn:	Luka Božičević									#D
Approved:	Grga Kolić		Object:	RDF Albioma Les Bois Rouge Reunion - France	Content:	ASH PIT PUMP 1 - CONTROL	Drawing designation: BRC-4-ATEP0-1874-G		=4LKD001AR	Sheet: 525
Format:	A3								+4LKD007AR	Next: 526

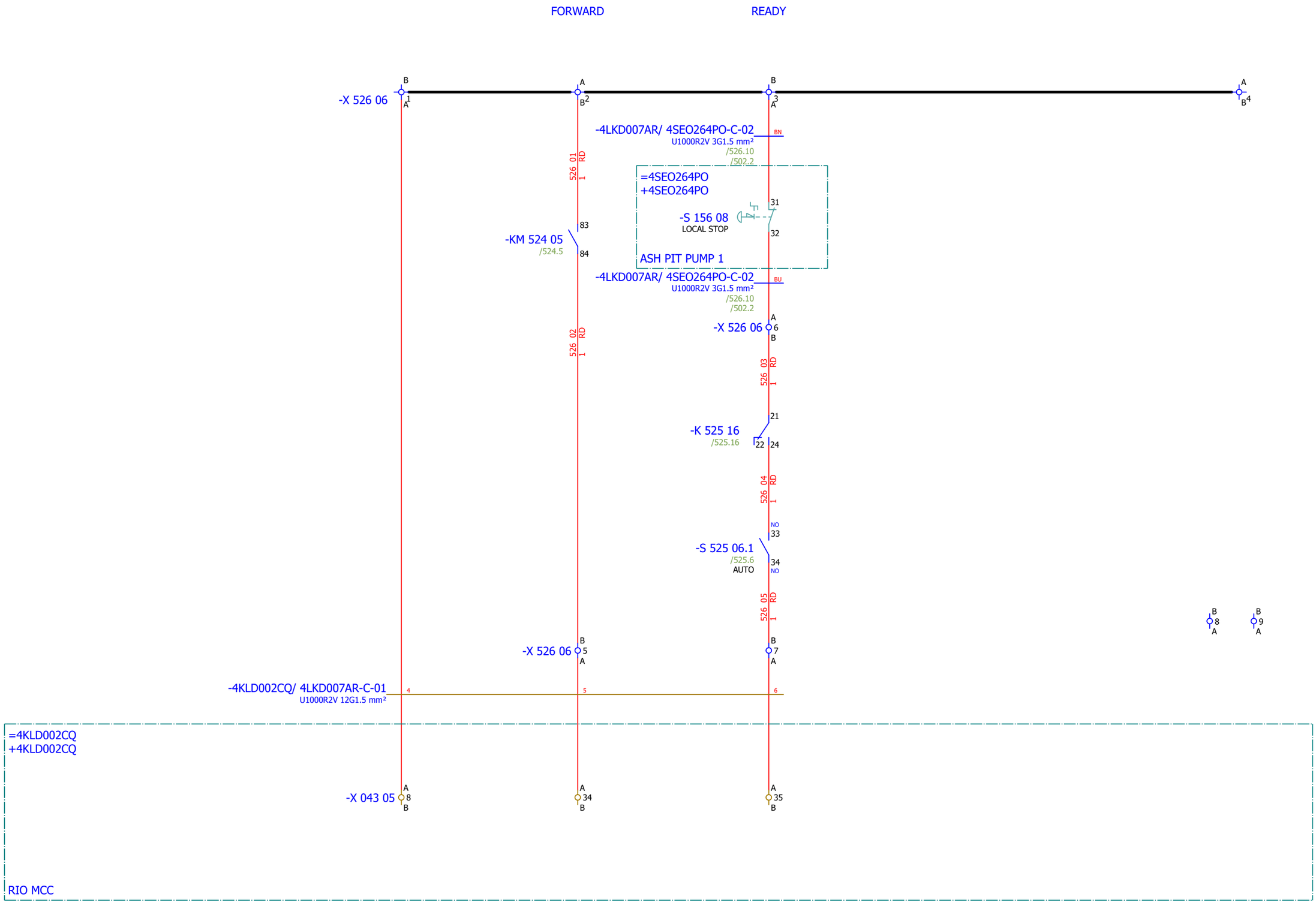

Date:	17.03.2026.	SINTAKSA A Voith Company	Client:	ANDRITZ TEP d.o.o. Ulica 108. brigade ZNG 84, 35000 Slavonski Brod, Croatia	Scope: BOILER/LOW VOLTAGE CABINET BOILER (NORMAL) 7	Project: BRC-4	Unit & Issuer: ATEP0	Number: 1874	Revision: G
Drawn:	Luka Božičević								#D
Approved:	Grga Kolić		Object:	RDF Albioma Les Bois Rouge Reunion - France	Content: ASH PIT PUMP 1 - SIGNALIZATION	Drawing designation: BRC-4-ATEP0-1874-G		=4LKD001AR	Sheet: 526
Format:	A3							+4LKD007AR	Next: 527

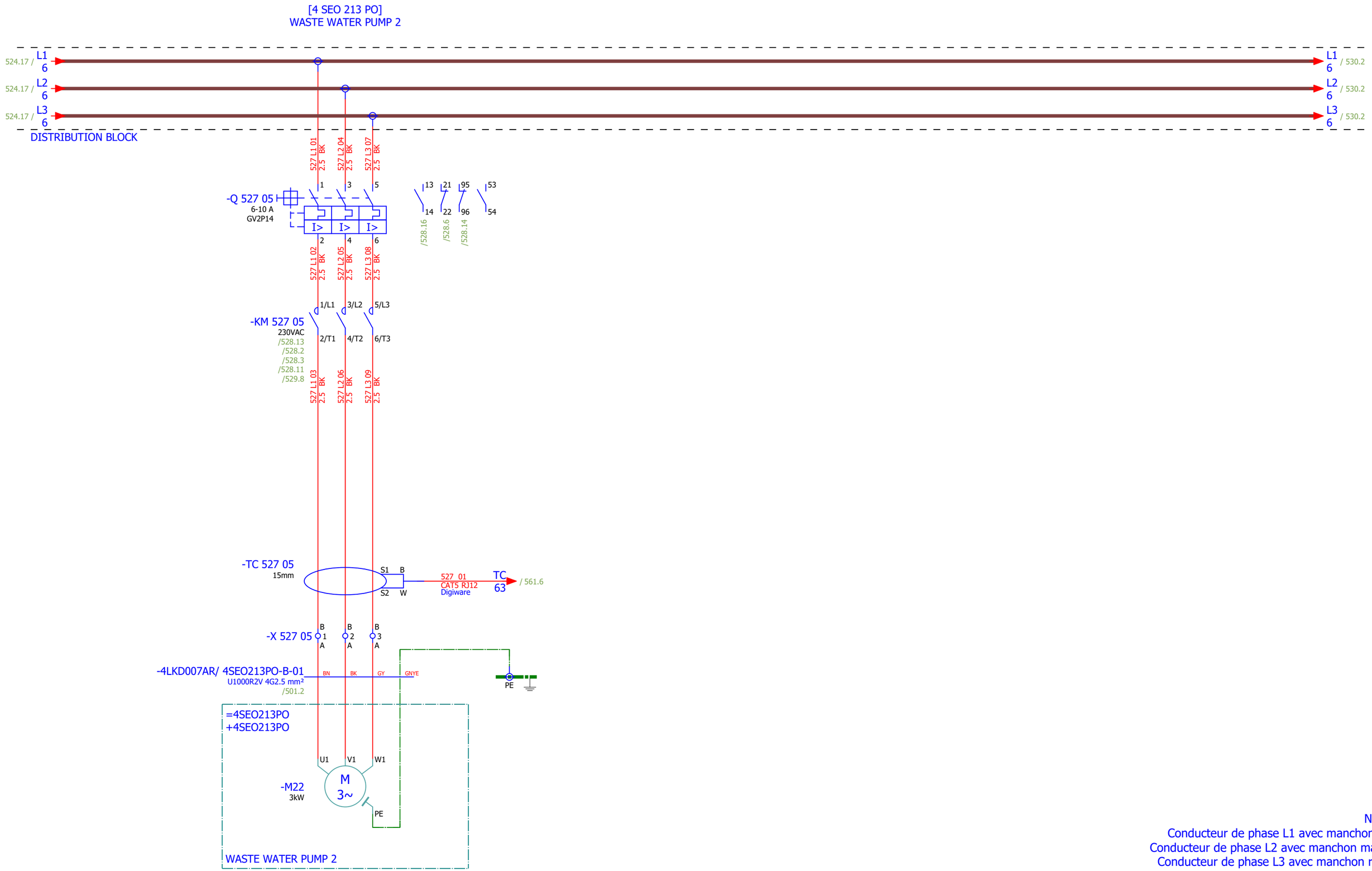

NOTE:
Conducteur de phase L1 avec manchon noir
Conducteur de phase L2 avec manchon marron
Conducteur de phase L3 avec manchon rouge

Date:	17.03.2026.	SINTAKSA A Voith Company	Client:	ANDRITZ TEP d.o.o. Ulica 108. brigade ZNG 84, 35000 Slavonski Brod, Croatia	Scope: BOILER/LOW VOLTAGE CABINET BOILER (NORMAL) 7	Project: BRC-4	Unit & Issuer: ATEP0	Number: 1874	Revision: G
Drawn:	Luka Božičević								#D
Approved:	Grga Kolić		Object:	RDF Albioma Les Bois Rouge Reunion - France	Content: WASTE WATER PUMP 2	Drawing designation: BRC-4-ATEP0-1874-G		=4LKD001AR	Sheet: 527
Format:	A3							+4LKD007AR	Next: 528

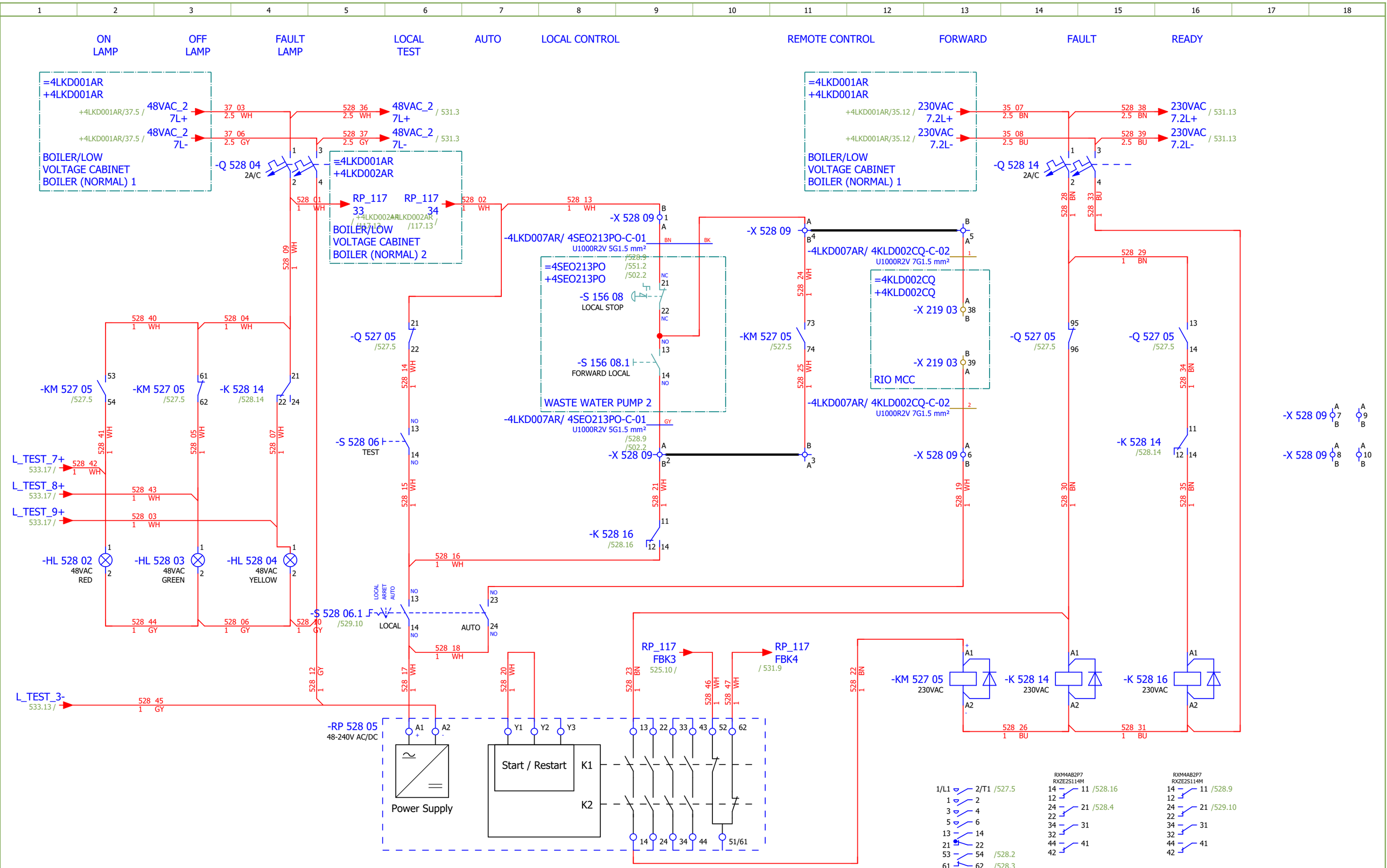

Date:	17.03.2026.	SINTAKSA A Voith Company	Client:	ANDRITZ TEP d.o.o. Ulica 108. brigade ZNG 84, 35000 Slavonski Brod, Croatia	Scope:	BOILER/LOW VOLTAGE CABINET BOILER (NORMAL) 7	Project: BRC-4	Unit & Issuer: ATEP0	Number: 1874	Revision: G
Drawn:	Luka Božičević									#D
Approved:	Grga Kolić		Object:	RDF Albioma Les Bois Rouge Reunion - France	Content:	WASTE WATER PUMP 2 - CONTROL	Drawing designation: BRC-4-ATEP0-1874-G		=4LKD001AR	Sheet: 528
Format:	A3								+4LKD007AR	Next: 529

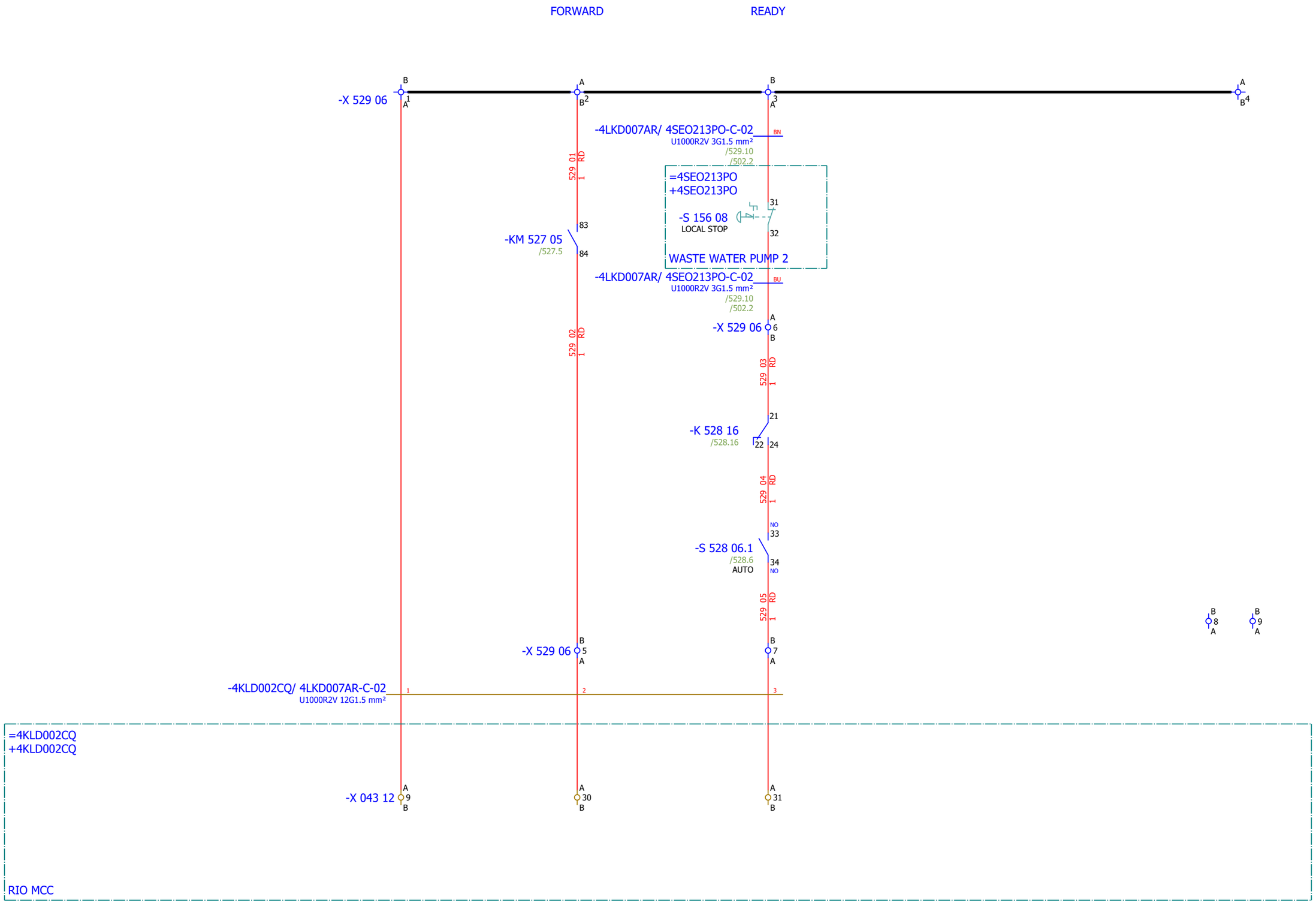

Date:	17.03.2026.	SINTAKSA A Voith Company	Client:	ANDRITZ TEP d.o.o. Ulica 108. brigade ZNG 84, 35000 Slavonski Brod, Croatia	Scope: BOILER/LOW VOLTAGE CABINET BOILER (NORMAL) 7	Project: BRC-4	Unit & Issuer: ATEP0	Number: 1874	Revision: G
Drawn:	Luka Božičević								#D
Approved:	Grga Kolić		Object:	RDF Albioma Les Bois Rouge Reunion - France	Content: WASTE WATER PUMP 2 - SIGNALIZATION	Drawing designation: BRC-4-ATEP0-1874-G		=4LKD001AR	Sheet: 529
Format:	A3							+4LKD007AR	Next: 530

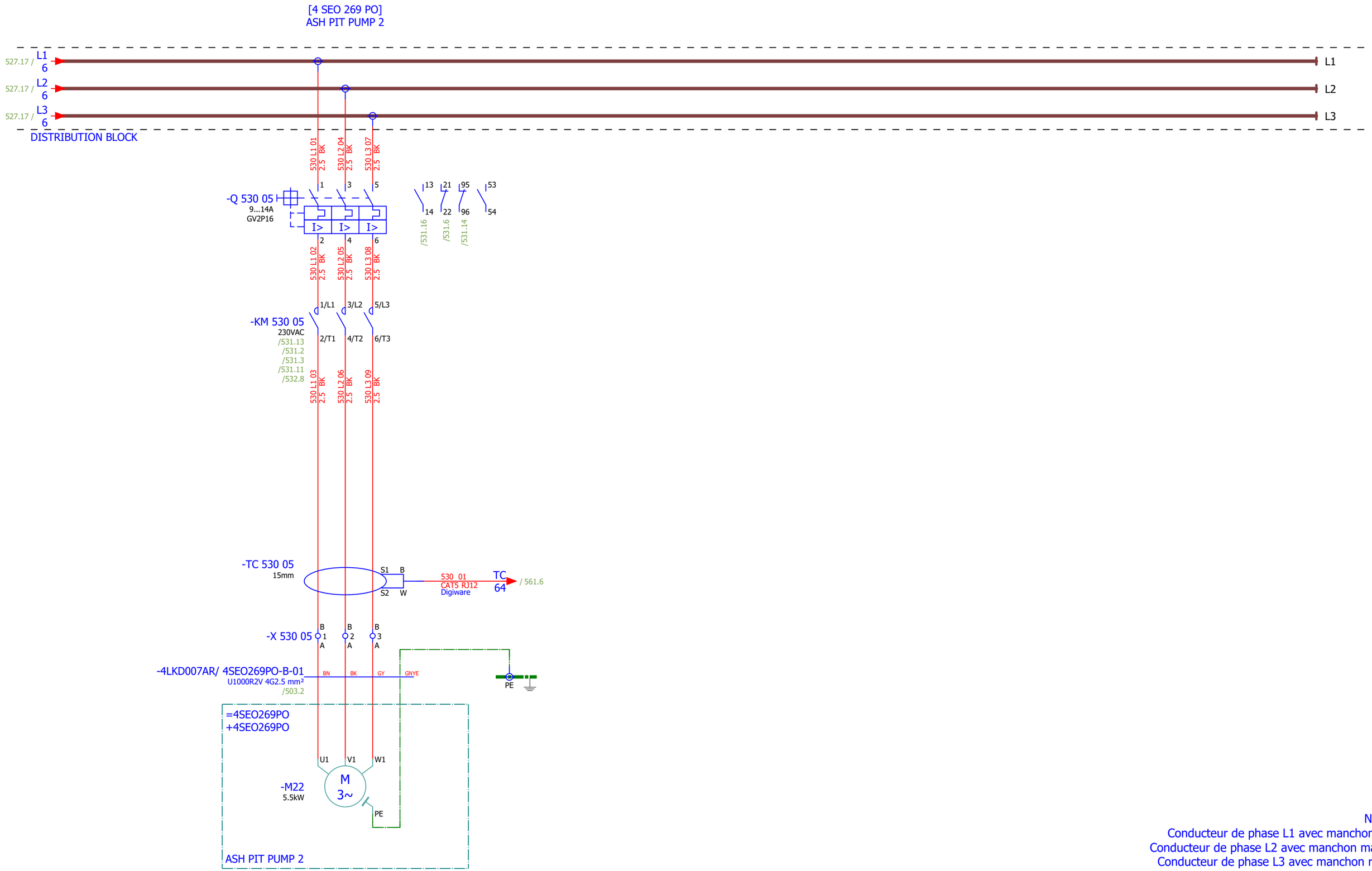

NOTE:
Conducteur de phase L1 avec manchon noir
Conducteur de phase L2 avec manchon marron
Conducteur de phase L3 avec manchon rouge

Date:	17.03.2026.	SINTAKSA A Voith Company	Client:	ANDRITZ TEP d.o.o. Ulica 108. brigade ZNG 84, 35000 Slavonski Brod, Croatia	Scope: BOILER/LOW VOLTAGE CABINET BOILER (NORMAL) 7	Project: BRC-4	Unit & Issuer: ATEP0	Number: 1874	Revision: G
Drawn:	Luka Božičević								#D
Approved:	Grga Kolić		Object:	RDF Albioma Les Bois Rouge Reunion - France	Content: ASH PIT PUMP 2	Drawing designation: BRC-4-ATEP0-1874-G		=4LKD001AR	Sheet: 530
Format:	A3							+4LKD007AR	Next: 531

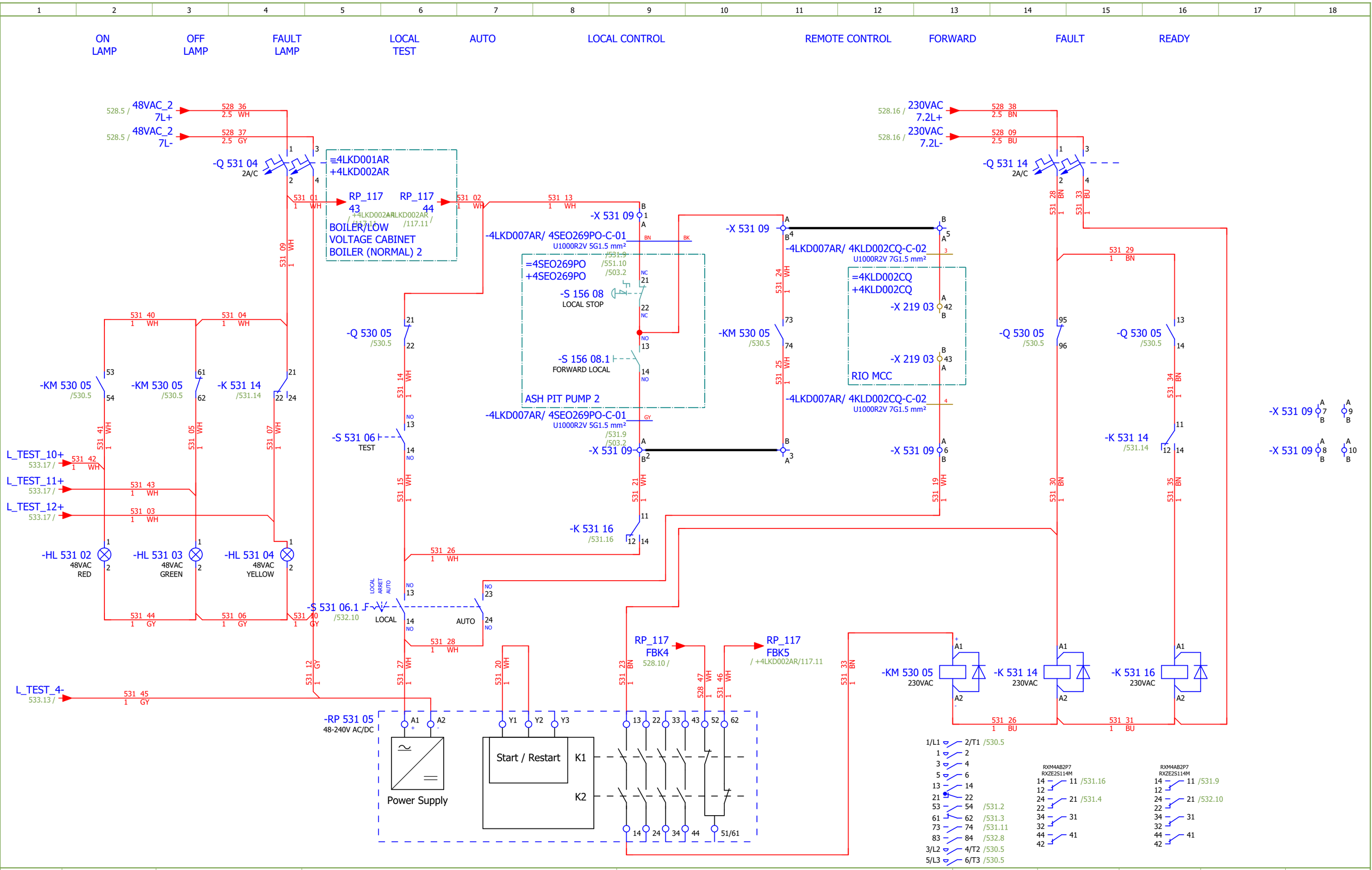

Date:	17.03.2026.	SINTAKSA A Voith Company	Client: ANDRITZ TEP d.o.o. Ulica 108. brigade ZNG 84, 35000 Slavonski Brod, Croatia	Scope: BOILER/LOW VOLTAGE CABINET BOILER (NORMAL) 7	Project: BRC-4	Unit & Issuer: ATEP0	Number: 1874	Revision: G	
Drawn:	Luka Božičević								#D
Approved:	Grga Kolić		Object: RDF Albioma Les Bois Rouge Reunion - France	Content: ASH PIT PUMP 2 - CONTROL	Drawing designation: BRC-4-ATEP0-1874-G			=4LKD001AR	Sheet: 531
Format:	A3							+4LKD007AR	Next: 532

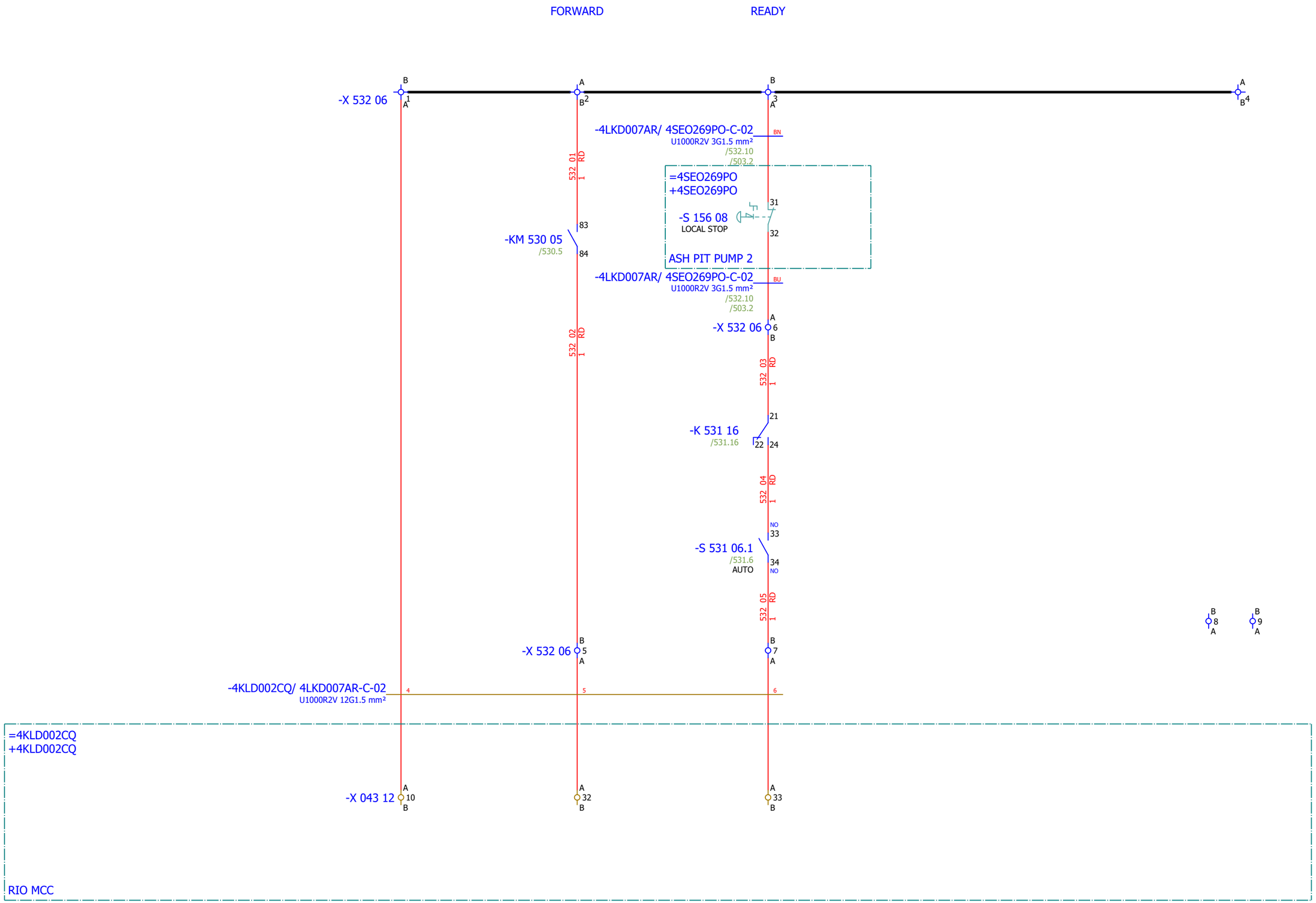

Date:	17.03.2026.	SINTAKSA A Voith Company	Client:	ANDRITZ TEP d.o.o. Ulica 108. brigade ZNG 84, 35000 Slavonski Brod, Croatia	Scope: BOILER/LOW VOLTAGE CABINET BOILER (NORMAL) 7	Project: BRC-4	Unit & Issuer: ATEP0	Number: 1874	Revision: G
Drawn:	Luka Božičević								#D
Approved:	Grga Kolić		Object:	RDF Albioma Les Bois Rouge Reunion - France	Content: ASH PIT PUMP 2 - SIGNALIZATION	Drawing designation: BRC-4-ATEP0-1874-G		=4LKD001AR	Sheet: 532
Format:	A3							+4LKD007AR	Next: 533

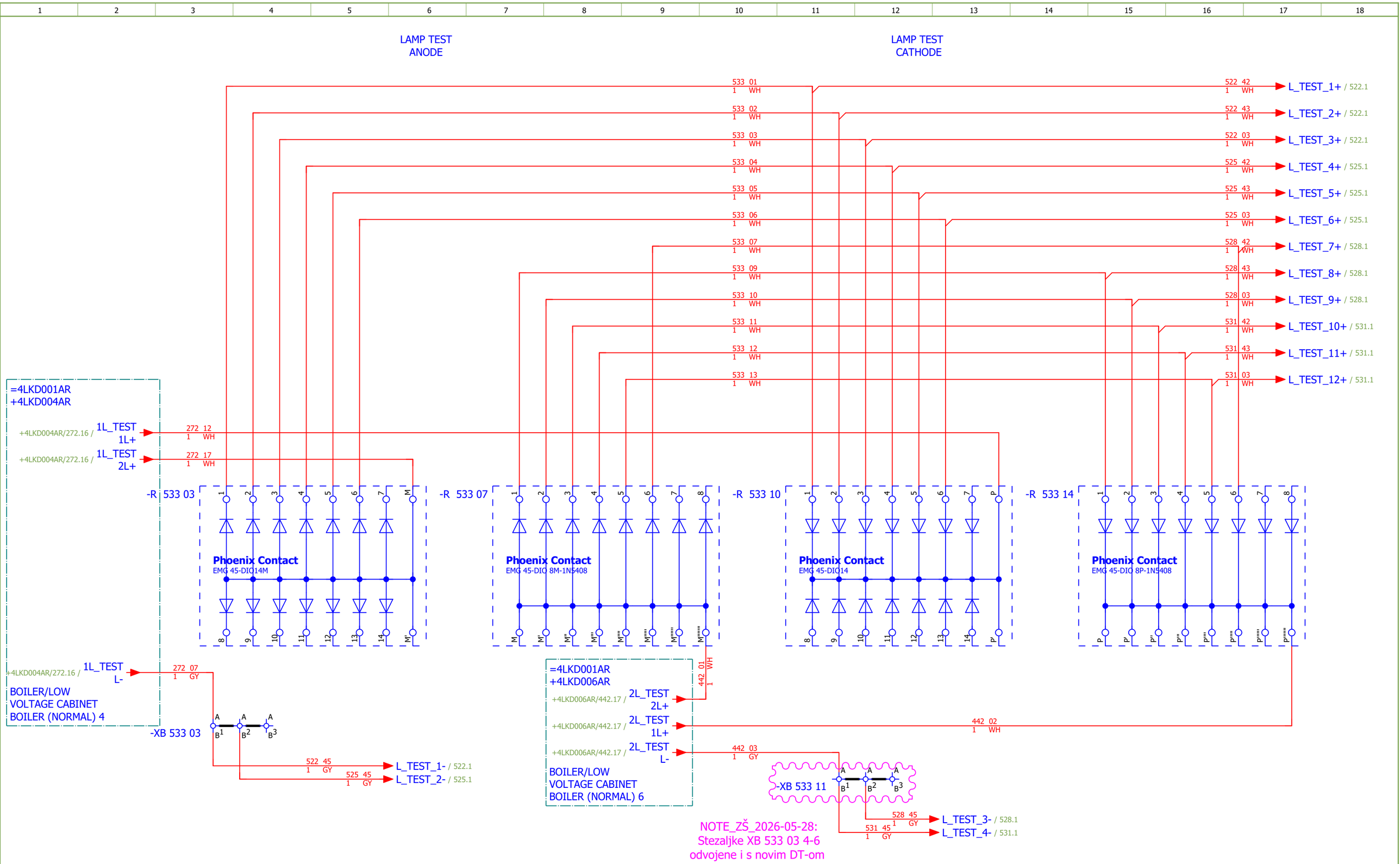

Date:	17.03.2026.	SINTAKSA A Voith Company	Client: ANDRITZ TEP d.o.o. Ulica 108. brigade ZNG 84, 35000 Slavonski Brod, Croatia	Scope: BOILER/LOW VOLTAGE CABINET BOILER (NORMAL) 7	Project: BRC-4	Unit & Issuer: ATEP0	Number: 1874	Revision: G	
Drawn:	Luka Božičević								#D
Approved:	Grga Kolić		Object: RDF Albioma Les Bois Rouge Reunion - France	Content: LAMP TEST	Drawing designation: BRC-4-ATEP0-1874-G			=4LKD001AR	Sheet: 533
Format:	A3							+4LKD007AR	Next: 534

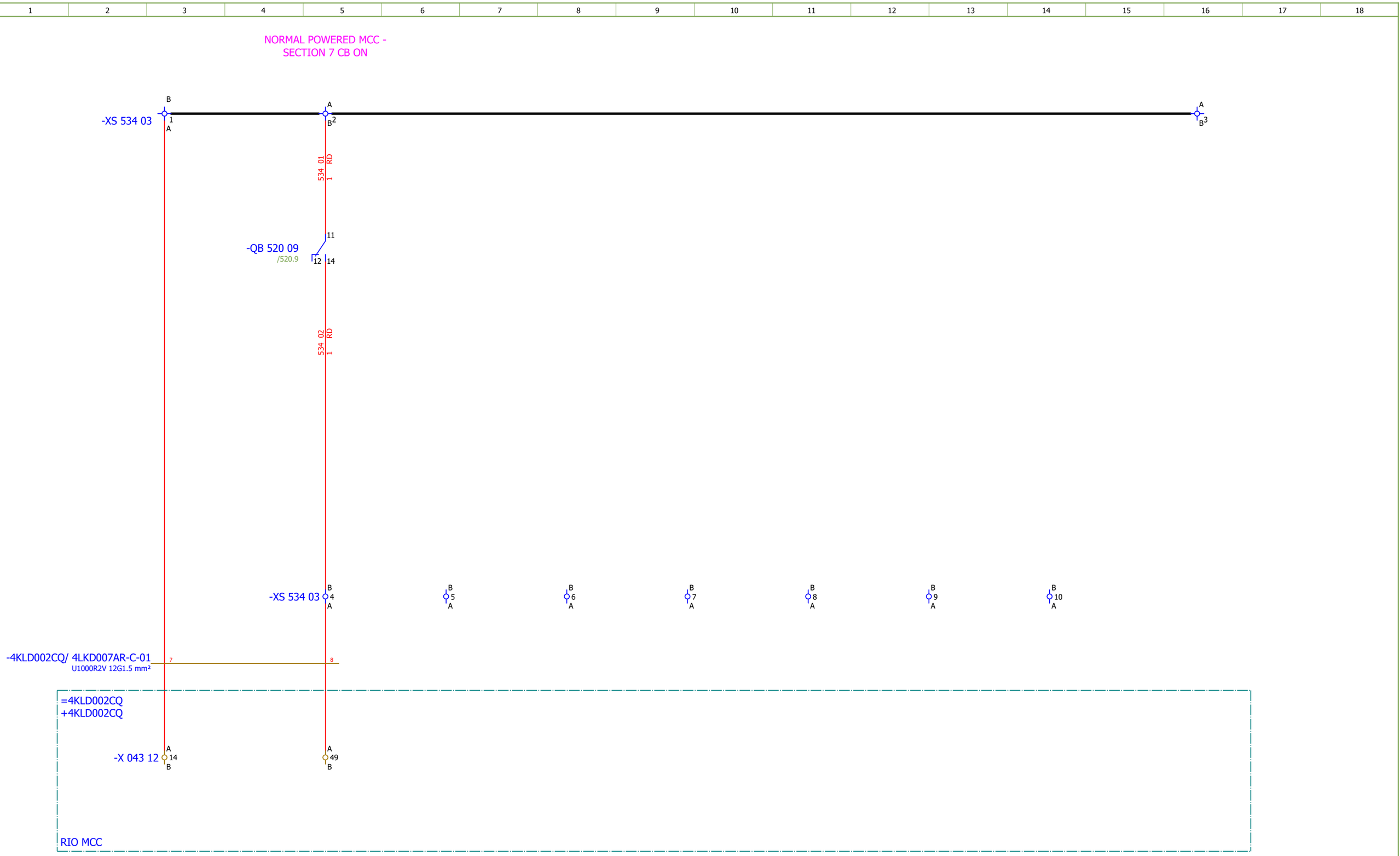

Date:	17.03.2026.	SINTAKSA A Voith Company	Client:	ANDRITZ TEP d.o.o. Ulica 108. brigade ZNG 84, 35000 Slavonski Brod, Croatia	Scope: BOILER/LOW VOLTAGE CABINET BOILER (NORMAL) 7	Project: BRC-4	Unit & Issuer: ATEP0	Number: 1874	Revision: G
Drawn:	Luka Božičević								#QA
Approved:	Grga Kolić		Object:	RDF Albioma Les Bois Rouge Reunion - France	Content: SIGNALIZATION	Drawing designation: BRC-4-ATEP0-1874-G			=4LKD001AR
Format:	A3								+4LKD007AR

Sheet: 534
Next: 551

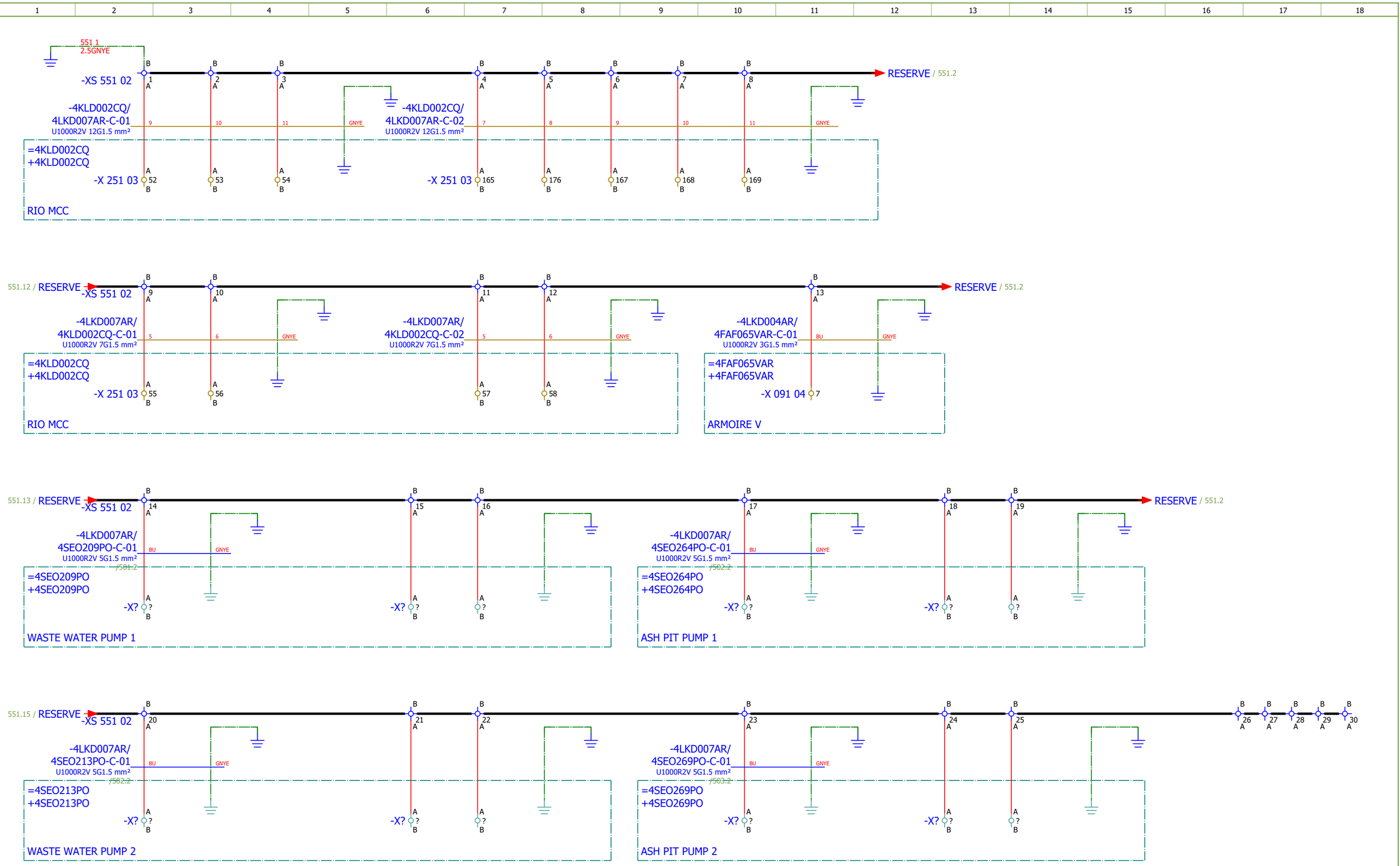

Date:	17.03.2026.	SINTAKSA A Voith Company	Client:	ANDRITZ TEP d.o.o. Ulica 108. brigade ZNG 84, 35000 Slavonski Brod, Croatia	Scope: BOILER/LOW VOLTAGE CABINET BOILER (NORMAL) 7	Project: BRC-4	Unit & Issuer: ATEP0	Number: 1874	Revision: G
Drawn:	Luka Božičević								#QB
Approved:	Grga Kolić		Object:	RDF Albioma Les Bois Rouge Reunion - France	Content: SPARE	Drawing designation: BRC-4-ATEP0-1874-G		=4LKD001AR	Sheet: 551
Format:	A3							+4LKD007AR	Next: 561

MEASUREMENT

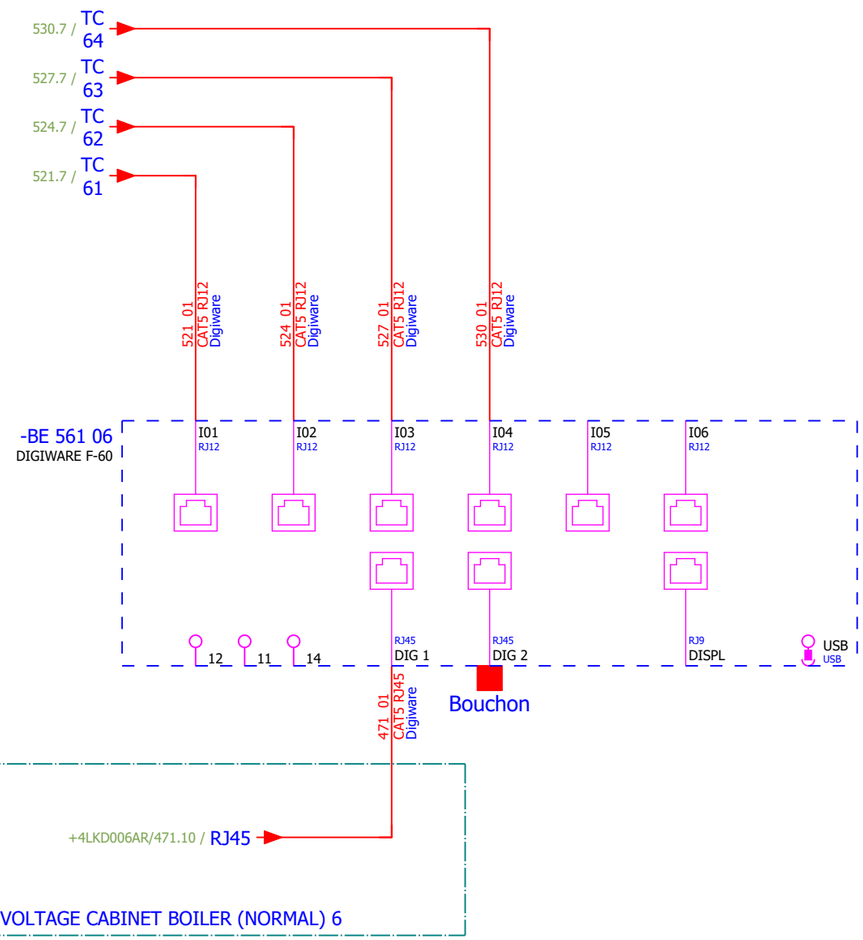

Date:	17.03.2026.	SINTAKSA A Voith Company	Client:	ANDRITZ TEP d.o.o. Ulica 108. brigade ZNG 84, 35000 Slavonski Brod, Croatia	Scope: BOILER/LOW VOLTAGE CABINET BOILER (NORMAL) 7	Project: BRC-4	Unit & Issuer: ATEP0	Number: 1874	Revision: G
Drawn:	Luka Božičević								#V
Approved:	Grga Kolić		Object:	RDF Albioma Les Bois Rouge Reunion - France	Content: COMMUNICATION	Drawing designation: BRC-4-ATEP0-1874-G			=4LKD001AR
Format:	A3								+4LKD007AR

Sheet: 561
Next: 601

Terminal diagram

Strip

=4LKD001AR+4LKD007AR-X 521 05

A SIDE								B SIDE
Placement	Target designation	Cable name and type	Conductor	Jumper		Wiring	Target designation	
/521.5	=4SEO209PO+4SEO209PO-M22:U1	4LKD007AR/ 4SEO209PO-B-01 U1000R2V 4G2.5 mm²	BN 2.5 mm²	'	1	BK 2.5 mm²	-KM 521 05:2/T1	
/521.5	=4SEO209PO+4SEO209PO-M22:V1	4LKD007AR/ 4SEO209PO-B-01 U1000R2V 4G2.5 mm²	BK 2.5 mm²	'	2	BK 2.5 mm²	-KM 521 05:4/T2	
/521.5	=4SEO209PO+4SEO209PO-M22:W1	4LKD007AR/ 4SEO209PO-B-01 U1000R2V 4G2.5 mm²	GY 2.5 mm²	'	3	BK 2.5 mm²	-KM 521 05:6/T3	

Terminal diagram

Strip

=4LKD001AR+4LKD007AR-X 522 09

A SIDE						B SIDE
Placement	Target designation	Cable name and type	Conductor	Jumper	Wiring	Target designation
/522.9	=4SEO209PO+4SEO209PO-S 156 08:21	4LKD007AR/ 4SEO209PO-C-01 U1000R2V 5G1.5 mm²	BN 1.5 mm²	1	WH 1 mm²	-Q 521 05:21
/522.9	=4SEO209PO+4SEO209PO-S 156 08.1:14	4LKD007AR/ 4SEO209PO-C-01 U1000R2V 5G1.5 mm²	GY 1.5 mm²	2	WH 1 mm²	-K 522 16:11
				3	WH 1 mm²	-KM 521 05:74
/522.9	=4SEO209PO+4SEO209PO-S 156 08.1:13	4LKD007AR/ 4SEO209PO-C-01 U1000R2V 5G1.5 mm²	BK 1.5 mm²	4	WH 1 mm²	-KM 521 05:73
				5		
				6	WH 1 mm²	-S 522 06.1:23
				7		
				8		
				9		
				10		

Terminal diagram

Strip

=4LKD001AR+4LKD007AR-X 523 06

A SIDE						B SIDE
Placement	Target designation	Cable name and type	Conductor	Jumper	Wiring	Target designation
				1		
				2	RD 1 mm²	-KM 521 05:83
/523.10	=4SEO209PO+4SEO209PO-S 156 08:31	4LKD007AR/ 4SEO209PO-C-02 U1000R2V 5G1.5 mm²	BN 1.5 mm²	3		
				4		
				5	RD 1 mm²	-KM 521 05:84
/523.10	=4SEO209PO+4SEO209PO-S 156 08:32	4LKD007AR/ 4SEO209PO-C-02 U1000R2V 5G1.5 mm²	BK 1.5 mm²	6	RD 1 mm²	-K 522 16:21
				7	RD 1 mm²	-S 522 06.1:34

Date:	17.03.2026.	SINTAKSA A Voith Company	Client:	ANDRITZ TEP d.o.o. Ulica 108. brigade ZNG 84, 35000 Slavonski Brod, Croatia	Scope: BOILER/LOW VOLTAGE CABINET BOILER (NORMAL) 7	Project: BRC-4	Unit & Issuer: ATEP0	Number: 1874	Revision: G
Drawn:	Luka Božičević								#Y
Approved:	Grga Kolić		Object:	RDF Albioma Les Bois Rouge Reunion - France	Content: Terminal diagram =4LKD001AR+4LKD007AR-X 523 06	Drawing designation: BRC-4-ATEP0-1874-G			=4LKD001AR
Format:	A3								+4LKD007AR

Sheet: 603

Next: 604

Terminal diagram

Strip

=4LKD001AR+4LKD007AR-X 524 05

A SIDE								B SIDE
Placement	Target designation	Cable name and type	Conductor	Jumper		Wiring	Target designation	
/524.5	=4SEO264PO+4SEO264PO-M22:U1	4LKD007AR/ 4SEO264PO-B-01 U1000R2V 4G2.5 mm²	BN 2.5 mm²	'	1	BK 2.5 mm²	-KM 524 05:2/T1	
/524.5	=4SEO264PO+4SEO264PO-M22:V1	4LKD007AR/ 4SEO264PO-B-01 U1000R2V 4G2.5 mm²	BK 2.5 mm²	'	2	BK 2.5 mm²	-KM 524 05:4/T2	
/524.5	=4SEO264PO+4SEO264PO-M22:W1	4LKD007AR/ 4SEO264PO-B-01 U1000R2V 4G2.5 mm²	GY 2.5 mm²	'	3	BK 2.5 mm²	-KM 524 05:6/T3	

Terminal diagram

Strip

=4LKD001AR+4LKD007AR-X 525 09

A SIDE						B SIDE
Placement	Target designation	Cable name and type	Conductor	Jumper	Wiring	Target designation
/525.9	=4SEO264PO+4SEO264PO-S 156 08:21	4LKD007AR/ 4SEO264PO-C-01 U1000R2V 5G1.5 mm²	BN 1.5 mm²		WH 1 mm²	-Q 524 05:21
/525.9	=4SEO264PO+4SEO264PO-S 156 08.1:14	4LKD007AR/ 4SEO264PO-C-01 U1000R2V 5G1.5 mm²	GY 1.5 mm²		WH 1 mm²	-K 525 16:11
					WH 1 mm²	-KM 524 05:74
/525.9	=4SEO264PO+4SEO264PO-S 156 08.1:13	4LKD007AR/ 4SEO264PO-C-01 U1000R2V 5G1.5 mm²	BK 1.5 mm²		WH 1 mm²	-KM 524 05:73
					WH 1 mm²	-S 525 06.1:23

Date:	17.03.2026.	SINTAKSA A Voith Company	Client:	ANDRITZ TEP d.o.o. Ulica 108. brigade ZNG 84, 35000 Slavonski Brod, Croatia	Scope: BOILER/LOW VOLTAGE CABINET BOILER (NORMAL) 7	Project: BRC-4	Unit & Issuer: ATEP0	Number: 1874	Revision: G
Drawn:	Luka Božičević								#Y
Approved:	Grga Kolić		Object:	RDF Albioma Les Bois Rouge Reunion - France	Content: Terminal diagram =4LKD001AR+4LKD007AR-X 525 09	Drawing designation: BRC-4-ATEP0-1874-G			=4LKD001AR
Format:	A3								+4LKD007AR

Sheet: 605

Next: 606

Terminal diagram

Strip

=4LKD001AR+4LKD007AR-X 526 06

A SIDE						B SIDE
Placement	Target designation	Cable name and type	Conductor	Jumper	Wiring	Target designation
				1		
				2	RD 1 mm²	-KM 524 05:83
/526.10	=4SEO264PO+4SEO264PO-S 156 08:31	4LKD007AR/ 4SEO264PO-C-02 U1000R2V 5G1.5 mm²	BN 1.5 mm²	3		
				4		
				5	RD 1 mm²	-KM 524 05:84
/526.10	=4SEO264PO+4SEO264PO-S 156 08:32	4LKD007AR/ 4SEO264PO-C-02 U1000R2V 5G1.5 mm²	BK 1.5 mm²	6	RD 1 mm²	-K 525 16:21
				7	RD 1 mm²	-S 525 06.1:34

Date:	17.03.2026.	SINTAKSA A Voith Company	Client:	ANDRITZ TEP d.o.o. Ulica 108. brigade ZNG 84, 35000 Slavonski Brod, Croatia	Scope: BOILER/LOW VOLTAGE CABINET BOILER (NORMAL) 7	Project: BRC-4	Unit & Issuer: ATEP0	Number: 1874	Revision: G
Drawn:	Luka Božičević								#Y
Approved:	Grga Kolić		Object:	RDF Albioma Les Bois Rouge Reunion - France	Content: Terminal diagram =4LKD001AR+4LKD007AR-X 526 06	Drawing designation: BRC-4-ATEP0-1874-G			=4LKD001AR
Format:	A3								+4LKD007AR

Sheet: 606

Next: 607

Terminal diagram

Strip

=4LKD001AR+4LKD007AR-X 527 05

A SIDE								B SIDE
Placement	Target designation	Cable name and type	Conductor	Jumper		Wiring	Target designation
/527.5	=4SEO213PO+4SEO213PO-M22:U1	4LKD007AR/ 4SEO213PO-B-01 U1000R2V 4G2.5 mm²	BN 2.5 mm²	'	1	BK 2.5 mm²	-KM 527 05:2/T1
/527.5	=4SEO213PO+4SEO213PO-M22:V1	4LKD007AR/ 4SEO213PO-B-01 U1000R2V 4G2.5 mm²	BK 2.5 mm²	'	2	BK 2.5 mm²	-KM 527 05:4/T2
/527.5	=4SEO213PO+4SEO213PO-M22:W1	4LKD007AR/ 4SEO213PO-B-01 U1000R2V 4G2.5 mm²	GY 2.5 mm²	'	3	BK 2.5 mm²	-KM 527 05:6/T3

Terminal diagram

Strip

=4LKD001AR+4LKD007AR-X 528 09

A SIDE						B SIDE
Placement	Target designation	Cable name and type	Conductor	Jumper	Wiring	Target designation
/528.9	=4SEO213PO+4SEO213PO-S 156 08:21	4LKD007AR/ 4SEO213PO-C-01 U1000R2V 5G1.5 mm²	BN 1.5 mm²		WH 1 mm²	-Q 527 05:21
/528.9	=4SEO213PO+4SEO213PO-S 156 08.1:14	4LKD007AR/ 4SEO213PO-C-01 U1000R2V 5G1.5 mm²	GY 1.5 mm²		WH 1 mm²	-K 528 16:11
					WH 1 mm²	-KM 527 05:74
/528.9	=4SEO213PO+4SEO213PO-S 156 08.1:13	4LKD007AR/ 4SEO213PO-C-01 U1000R2V 5G1.5 mm²	BK 1.5 mm²		WH 1 mm²	-KM 527 05:73
					WH 1 mm²	-S 528 06.1:23

Date:	17.03.2026.	SINTAKSA A Voith Company	Client:	ANDRITZ TEP d.o.o. Ulica 108. brigade ZNG 84, 35000 Slavonski Brod, Croatia	Scope: BOILER/LOW VOLTAGE CABINET BOILER (NORMAL) 7	Project: BRC-4	Unit & Issuer: ATEP0	Number: 1874	Revision: G
Drawn:	Luka Božičević								#Y
Approved:	Grga Kolić		Object:	RDF Albioma Les Bois Rouge Reunion - France	Content: Terminal diagram =4LKD001AR+4LKD007AR-X 528 09	Drawing designation: BRC-4-ATEP0-1874-G			=4LKD001AR
Format:	A3								+4LKD007AR

Sheet: 608

Next: 609

Terminal diagram

Strip

=4LKD001AR+4LKD007AR-X 529 06

A SIDE						B SIDE
Placement	Target designation	Cable name and type	Conductor	Jumper	Wiring	Target designation
				1		
				2	RD 1 mm²	-KM 527 05:83
/529.10	=4SEO213PO+4SEO213PO-S 156 08:31	4LKD007AR/ 4SEO213PO-C-02 U1000R2V 5G1.5 mm²	BN 1.5 mm²	3		
				4		
				5	RD 1 mm²	-KM 527 05:84
/529.10	=4SEO213PO+4SEO213PO-S 156 08:32	4LKD007AR/ 4SEO213PO-C-02 U1000R2V 5G1.5 mm²	BK 1.5 mm²	6	RD 1 mm²	-K 528 16:21
				7	RD 1 mm²	-S 528 06.1:34

Date:	17.03.2026.	SINTAKSA A Voith Company	Client:	ANDRITZ TEP d.o.o. Ulica 108. brigade ZNG 84, 35000 Slavonski Brod, Croatia	Scope: BOILER/LOW VOLTAGE CABINET BOILER (NORMAL) 7	Project: BRC-4	Unit & Issuer: ATEP0	Number: 1874	Revision: G
Drawn:	Luka Božičević								#Y
Approved:	Grga Kolić		Object:	RDF Albioma Les Bois Rouge Reunion - France	Content: Terminal diagram =4LKD001AR+4LKD007AR-X 529 06	Drawing designation: BRC-4-ATEP0-1874-G			=4LKD001AR
Format:	A3								+4LKD007AR

Sheet: 609

Next: 610

Terminal diagram

Strip

=4LKD001AR+4LKD007AR-X 530 05

A SIDE								B SIDE
Placement	Target designation	Cable name and type	Conductor	Jumper		Wiring	Target designation	
/530.5	=4SEO269PO+4SEO269PO-M22:U1	4LKD007AR/ 4SEO269PO-B-01 U1000R2V 4G2.5 mm²	BN 2.5 mm²	'	1	BK 2.5 mm²	-KM 530 05:2/T1	
/530.5	=4SEO269PO+4SEO269PO-M22:V1	4LKD007AR/ 4SEO269PO-B-01 U1000R2V 4G2.5 mm²	BK 2.5 mm²	'	2	BK 2.5 mm²	-KM 530 05:4/T2	
/530.5	=4SEO269PO+4SEO269PO-M22:W1	4LKD007AR/ 4SEO269PO-B-01 U1000R2V 4G2.5 mm²	GY 2.5 mm²	'	3	BK 2.5 mm²	-KM 530 05:6/T3	

Terminal diagram

Strip

=4LKD001AR+4LKD007AR-X 531 09

A SIDE						B SIDE
Placement	Target designation	Cable name and type	Conductor	Jumper	Wiring	Target designation
/531.9	=4SEO269PO+4SEO269PO-S 156 08:21	4LKD007AR/ 4SEO269PO-C-01 U1000R2V 5G1.5 mm²	BN 1.5 mm²		WH 1 mm²	-Q 530 05:21
/531.9	=4SEO269PO+4SEO269PO-S 156 08.1:14	4LKD007AR/ 4SEO269PO-C-01 U1000R2V 5G1.5 mm²	GY 1.5 mm²		WH 1 mm²	-K 531 16:11
					WH 1 mm²	-KM 530 05:74
/531.9	=4SEO269PO+4SEO269PO-S 156 08.1:13	4LKD007AR/ 4SEO269PO-C-01 U1000R2V 5G1.5 mm²	BK 1.5 mm²		WH 1 mm²	-KM 530 05:73
					WH 1 mm²	-S 531 06.1:23

Date:	17.03.2026.	SINTAKSA A Voith Company	Client:	ANDRITZ TEP d.o.o. Ulica 108. brigade ZNG 84, 35000 Slavonski Brod, Croatia	Scope: BOILER/LOW VOLTAGE CABINET BOILER (NORMAL) 7	Project: BRC-4	Unit & Issuer: ATEP0	Number: 1874	Revision: G
Drawn:	Luka Božičević								#Y
Approved:	Grga Kolić		Object:	RDF Albioma Les Bois Rouge Reunion - France	Content: Terminal diagram =4LKD001AR+4LKD007AR-X 531 09	Drawing designation: BRC-4-ATEP0-1874-G			=4LKD001AR
Format:	A3								+4LKD007AR

Sheet: 611

Next: 612

Terminal diagram

Strip

=4LKD001AR+4LKD007AR-X 532 06

A SIDE						B SIDE
Placement	Target designation	Cable name and type	Conductor	Jumper	Wiring	Target designation
				1		
				2	RD 1 mm²	-KM 530 05:83
/532.10	=4SEO269PO+4SEO269PO-S 156 08:31	4LKD007AR/ 4SEO269PO-C-02 U1000R2V 5G1.5 mm²	BN 1.5 mm²	3		
				4		
				5	RD 1 mm²	-KM 530 05:84
/532.10	=4SEO269PO+4SEO269PO-S 156 08:32	4LKD007AR/ 4SEO269PO-C-02 U1000R2V 5G1.5 mm²	BK 1.5 mm²	6	RD 1 mm²	-K 531 16:21
				7	RD 1 mm²	-S 531 06.1:34

Date:	17.03.2026.	SINTAKSA A Voith Company	Client:	ANDRITZ TEP d.o.o. Ulica 108. brigade ZNG 84, 35000 Slavonski Brod, Croatia	Scope: BOILER/LOW VOLTAGE CABINET BOILER (NORMAL) 7	Project: BRC-4	Unit & Issuer: ATEP0	Number: 1874	Revision: G
Drawn:	Luka Božičević								#Y
Approved:	Grga Kolić		Object:	RDF Albioma Les Bois Rouge Reunion - France	Content: Terminal diagram =4LKD001AR+4LKD007AR-X 532 06	Drawing designation: BRC-4-ATEP0-1874-G			=4LKD001AR
Format:	A3								+4LKD007AR

Sheet: 612

Next: 613

Terminal diagram

Strip

=4LKD001AR+4LKD007AR-XB 533 03

A SIDE						B SIDE
Placement	Target designation	Cable name and type	Conductor	Jumper	Wiring	Target designation
+4LKD004AR/272.5	+4LKD004AR-XB 272 03:6:A		GY 1 mm²	1	GY 1 mm²	-RP 522 05:A2
				2	GY 1 mm²	-RP 525 05:A2
				3		

Date:	17.03.2026.	SINTAKSA A Voith Company	Client:	ANDRITZ TEP d.o.o. Ulica 108. brigade ZNG 84, 35000 Slavonski Brod, Croatia	Scope: BOILER/LOW VOLTAGE CABINET BOILER (NORMAL) 7	Project: BRC-4	Unit & Issuer: ATEP0	Number: 1874	Revision: G
Drawn:	Luka Božičević								#Y
Approved:	Grga Kolić		Object:	RDF Albioma Les Bois Rouge Reunion - France	Content: Terminal diagram =4LKD001AR+4LKD007AR-XB 533 03	Drawing designation: BRC-4-ATEP0-1874-G			=4LKD001AR
Format:	A3								+4LKD007AR

Sheet: 613

Next: 614

Terminal diagram

Strip

=4LKD001AR+4LKD007AR-XB 533 11

A SIDE						B SIDE
Placement	Target designation	Cable name and type	Conductor	Jumper	Wiring	Target designation
+4LKD006AR/442.5	+4LKD006AR-XB 442 03:6:A		GY 1 mm²	1	GY 1 mm²	-RP 531 05:A2
				2	GY 1 mm²	-RP 528 05:A2
				3		

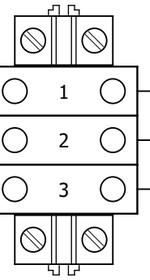

Date:	17.03.2026.	SINTAKSA A Voith Company	Client:	ANDRITZ TEP d.o.o. Ulica 108. brigade ZNG 84, 35000 Slavonski Brod, Croatia	Scope: BOILER/LOW VOLTAGE CABINET BOILER (NORMAL) 7	Project: BRC-4	Unit & Issuer: ATEP0	Number: 1874	Revision: G
Drawn:	Luka Božičević								#Y
Approved:	Grga Kolić		Object:	RDF Albioma Les Bois Rouge Reunion - France	Content: Terminal diagram =4LKD001AR+4LKD007AR-XB 533 11	Drawing designation: BRC-4-ATEP0-1874-G			=4LKD001AR
Format:	A3								+4LKD007AR

Sheet: 614

Next: 615

Terminal diagram

Strip

=4LKD001AR+4LKD007AR-XS 534 03

A SIDE						B SIDE
Placement	Target designation	Cable name and type	Conductor	Jumper	Wiring	Target designation
				1		
				2	RD 1 mm²	-QB 520 09:11
				3		
				4	RD 1 mm²	-QB 520 09:14
				5		
				6		
				7		
				8		
				9		
				10		

Date:	17.03.2026.	SINTAKSA A Voith Company	Client:	ANDRITZ TEP d.o.o. Ulica 108. brigade ZNG 84, 35000 Slavonski Brod, Croatia	Scope: BOILER/LOW VOLTAGE CABINET BOILER (NORMAL) 7	Project: BRC-4	Unit & Issuer: ATEP0	Number: 1874	Revision: G
Drawn:	Luka Božičević								#Y
Approved:	Grga Kolić		Object:	RDF Albioma Les Bois Rouge Reunion - France	Content: Terminal diagram =4LKD001AR+4LKD007AR-XS 534 03	Drawing designation: BRC-4-ATEP0-1874-G			=4LKD001AR
Format:	A3								+4LKD007AR

Sheet: 615

Next: 616

Terminal diagram

Strip

=4LKD001AR+4LKD007AR-XS 551 02

A SIDE						B SIDE
Placement	Target designation	Cable name and type	Conductor	Jumper	Wiring	Target designation
				1	GNYE 2.5 mm²	-PE
				2		
				3		
				4		
				5		
				6		
				7		
				8		
				9		
				10		
				11		
				12		
				13		
/551.2	=4SEO209PO+4SEO209PO-X?:?:A	4LKD007AR/ 4SEO209PO-C-01 U1000R2V 5G1.5 mm²	BU 1.5 mm²	14		
/551.6	=4SEO209PO+4SEO209PO-X?:?:A	4LKD007AR/ 4SEO209PO-C-02 U1000R2V 5G1.5 mm²	GY 1.5 mm²	15		
/551.7	=4SEO209PO+4SEO209PO-X?:?:A	4LKD007AR/ 4SEO209PO-C-02 U1000R2V 5G1.5 mm²	BU 1.5 mm²	16		
/551.10	=4SEO264PO+4SEO264PO-X?:?:A	4LKD007AR/ 4SEO264PO-C-01 U1000R2V 5G1.5 mm²	BU 1.5 mm²	17		
/551.13	=4SEO264PO+4SEO264PO-X?:?:A	4LKD007AR/ 4SEO264PO-C-02 U1000R2V 5G1.5 mm²	GY 1.5 mm²	18		
/551.14	=4SEO264PO+4SEO264PO-X?:?:A	4LKD007AR/ 4SEO264PO-C-02 U1000R2V 5G1.5 mm²	BU 1.5 mm²	19		
/551.2	=4SEO213PO+4SEO213PO-X?:?:A	4LKD007AR/ 4SEO213PO-C-01 U1000R2V 5G1.5 mm²	BU 1.5 mm²	20		
/551.6	=4SEO213PO+4SEO213PO-X?:?:A	4LKD007AR/ 4SEO213PO-C-02 U1000R2V 5G1.5 mm²	GY 1.5 mm²	21		
/551.7	=4SEO213PO+4SEO213PO-X?:?:A	4LKD007AR/ 4SEO213PO-C-02 U1000R2V 5G1.5 mm²	BU 1.5 mm²	22		
/551.10	=4SEO269PO+4SEO269PO-X?:?:A	4LKD007AR/ 4SEO269PO-C-01 U1000R2V 5G1.5 mm²	BU 1.5 mm²	23		
/551.13	=4SEO269PO+4SEO269PO-X?:?:A	4LKD007AR/ 4SEO269PO-C-02 U1000R2V 5G1.5 mm²	GY 1.5 mm²	24		
/551.14	=4SEO269PO+4SEO269PO-X?:?:A	4LKD007AR/ 4SEO269PO-C-02 U1000R2V 5G1.5 mm²	BU 1.5 mm²	25		

Terminal diagram

Strip

=4LKD001AR+4LKD007AR-XS 551 02

A SIDE

B SIDE

Placement	Target designation	Cable name and type	Conductor	Jumper		Wiring	Target designation
					26		
					27		
					28		
					29		
					30		

Date:	17.03.2026.	SINTAKSA A Voith Company	Client:	ANDRITZ TEP d.o.o. Ulica 108. brigade ZNG 84, 35000 Slavonski Brod, Croatia	Scope: BOILER/LOW VOLTAGE CABINET BOILER (NORMAL) 7	Project: BRC-4	Unit & Issuer: ATEP0	Number: 1874	Revision: G	
Drawn:	Luka Božičević									#Y
Approved:	Grga Kolić		Object:	RDF Albioma Les Bois Rouge Reunion - France	Content: Terminal diagram =4LKD001AR+4LKD007AR-XS 551 02	Drawing designation: BRC-4-ATEP0-1874-G			=4LKD001AR	Sheet: 617
Format:	A3								+4LKD007AR =4LKF001AR	Index: =4LKD001AR+4LKF001AR/1